Summary of Safety and Probable Benefit

I. General Information

Device Generic Name:	Endovascular Graft
Device Trade Name:	Ovation Abdominal Stent Graft System
Applicant's Name and Address:	TriVascular, Inc. 3910 Brickway Blvd. Santa Rosa, CA 95403
Humanitarian Device Exemption (HDE) Number:	H100008
Humanitarian Use Device (HUD) Number:	04-0145
Date of Humanitarian Use Device Designation:	February 25, 2005
Date of Panel Recommendation:	None
Date of Good Manufacturing Practice Inspection:	September 1, 2011
Date of Notice of Approval to Applicant:	November 1, 2011

II. Indications for Use

The HUD (#04-0145) was granted for the:

> *treatment of patients with abdominal aortic aneurysms who have small infrarenal aortic diameters from 15.5 to 17.4 mm and have iliac access vessels of less than 7 mm in diameter.*

The indications for use as stated in the product Instructions for Use (IFU) are outlined below:

> The TriVascular Ovation Abdominal Stent Graft System is indicated for use in subjects diagnosed with an aneurysm in the abdominal aorta with small aortic diameters and access vessels of less than 7 mm in diameter, and having vascular morphology suitable for endovascular repair, including:
>
> - Adequate iliac/femoral access compatible with vascular access techniques, devices, and/or accessories;
> - Non-aneurysmal proximal aortic neck:

- with a length of at least 7 mm proximal to the aneurysm,
- with an inner wall diameter of no less than 15.5 mm and no greater than 17.4 mm, and
- with an aortic angle of ≤ 60 degrees if proximal neck is ≥ 10 mm and ≤ 45 degrees if proximal neck is < 10 mm;

- Adequate distal iliac landing zone:
  - with a length of at least 10 mm, and
  - with an inner wall diameter of no less than 8 mm and no greater than 17 mm.

III. Contraindications

The Ovation Abdominal Stent Graft System is contraindicated in:

- Patients who have a condition that threatens to infect the graft.
- Patients with sensitivities or allergies to the device materials (including polytetrafluoroethylene [PTFE], PEG-based polymers, fluorinated ethylene propylene [FEP] or nitinol).

IV. Warnings and Precautions

The warnings and precautions can be found in the Ovation Abdominal Stent Graft System labeling.

V. Device Description

The TriVascular Ovation Abdominal Stent Graft System is an endovascular device delivered via catheter to treat abdominal aortic aneurysms (AAAs). The stent graft relines the diseased vasculature, providing an endovascular blood conduit for isolating the aneurysm from the high pressure flow of blood to reduce the risk of rupture. The stent graft is comprised of an aortic body section, iliac limbs, and iliac extensions, as required (Figure 1).

The TriVascular Ovation Abdominal Stent Graft System includes:

- A 20 mm Aortic Body Stent Graft and delivery catheter
- Iliac Limb Stent Grafts and delivery catheters
- Iliac Extension Stent Grafts and delivery catheters, as required
- A Fill Polymer Kit
- An Autoinjector

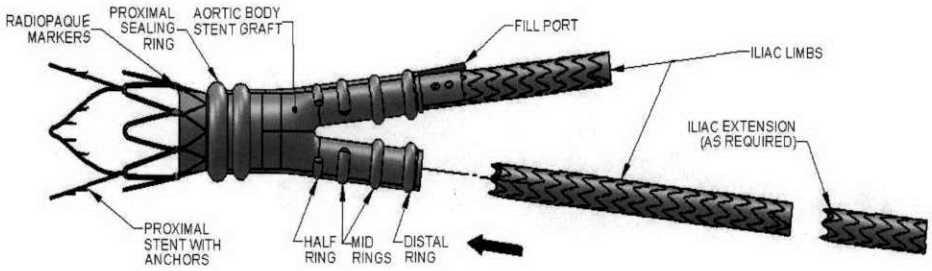

Figure 1. Schematic of Deployed TriVascular Ovation Abdominal Stent Graft System

Aortic Body Stent Graft

The 20 mm aortic body is comprised of a proximal stent for suprarenal fixation and a low-permeability PTFE graft. The stent has integral anchors for fixation to the aortic wall. For delivery, the stent is in a compressed state within the catheter. When released from the compressed state, the stent expands to engage the vessel wall. The nitinol stent is radiopaque and the implant contains radiopaque markers adjacent to the proximal graft edge for positioning during implant. To seal the proximal end of the graft and to provide support for the aortic body legs into which the iliac limbs are deployed, the graft body contains inflatable rings that are filled with a liquid polymer that solidifies during the deployment procedure. The graft has a fill port that connects the fill network of the graft to the delivery catheter.

Iliac Limb and Iliac Extension Stent Graft

The iliac limbs and extensions are comprised of a nitinol stent and a low-permeability PTFE. The iliac limbs are deployed into the leg section of the aortic body. Radiopaque markers enable visualization of the iliac limb-aortic body overlap or iliac extension-iliac limb overlap during deployment. Stent radial force provides fixation and sealing of the interface between the aortic body and each iliac limb, between the iliac limb and iliac extension, and between the iliac limb/extension and the landing zone in the iliac artery.

Aortic Body Delivery System

The aortic body stent graft is preloaded into a 14F OD delivery catheter for device introduction into the access vessel (illustrated in Figure 2). The aortic body delivery catheter has a lumen that allows for the use of a guidewire for delivery of the stent graft to the deployment site.

During stent graft deployment, the device is first positioned and the sheath is retracted. The proximal stent is then deployed using stent release knobs on the handle. The fill polymer is then delivered through the fill connector port using the autoinjector.

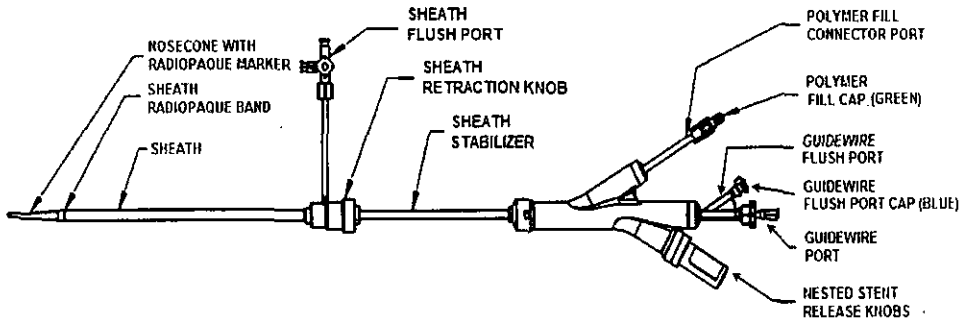

Figure 2. Schematic of TriVascular Ovation Abdominal Stent Graft System Aortic Body Delivery Catheter

Iliac Limb and Iliac Extension Delivery System

The iliac limbs and iliac extensions are preloaded into delivery catheters (13F–15F OD and 13F–14F OD respectively), as illustrated in Figure 3. The contralateral and ipsilateral iliac limbs are each deployed via iliac limb delivery catheters. After deployment of the aortic body, a guidewire is placed from the contralateral access site into the contralateral distal leg of the aortic body. The contralateral iliac limb is advanced into position and deployed into the aortic body by retracting the catheter sheath with the catheter in the appropriate position. The contralateral delivery catheter is then withdrawn from the vasculature. After the fill polymer cures within the sealing rings, the aortic body delivery catheter is disengaged from the fill port of the graft and withdrawn from the vasculature. The ipsilateral iliac limb delivery catheter is advanced over the ipsilateral guidewire and deployed using the method described above for the contralateral limb. The ipsilateral delivery catheter is then withdrawn from the vasculature.

If an iliac extension is required, the delivery system is advanced over the guidewire and the stent graft is deployed using the method described above for contralateral and ipsilateral iliac limbs.

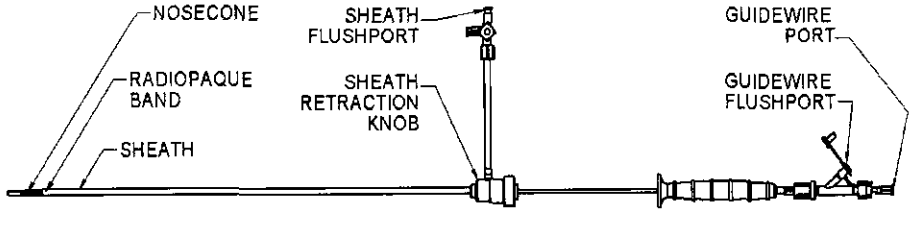

Figure 3. Schematic of TriVascular Ovation Abdominal Stent Graft System Iliac Limb / Iliac Extension Delivery Catheter

Fill Polymer and Autoinjector

The Fill Polymer Kit is shown in Figure 4. The Fill Polymer is comprised of three materials that are mixed prior to injection. Upon mixing and injection into the graft, the components of the fill polymer form a radiopaque polymer that fill the sealing rings of the PTFE channels in

the wall of the aortic body graft. The fill polymer radiopacity dissipates over time and may not be visible on fluoroscopy, X-ray, or CT beyond 1-2 months post-implant.

Prior to use, the two valves on the fill polymer kit are opened and the fill polymer is mixed by alternately depressing the two syringe plungers for a minimum of 15 full strokes. Thereafter, the full syringe is disconnected from the connection tube, slipped out of the syringe support and connected to the fill polymer injection port on the catheter handle. The syringe plunger is then inserted into the autoinjector and the autoinjector is given a quarter-turn to lock it in place. The autoinjector applies controlled pressure to inject the fill polymer into the graft.

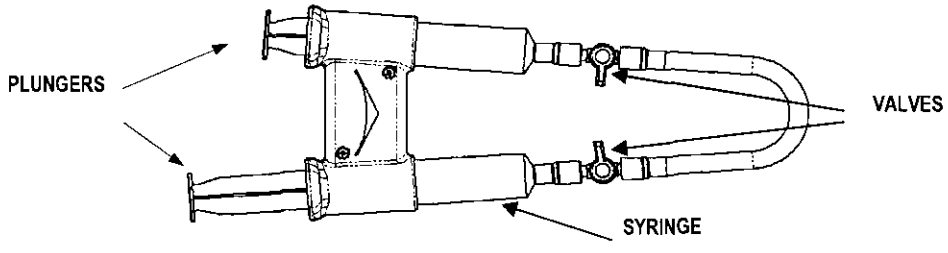

Figure 4. TriVascular Fill Polymer Kit

VI. Alternative Practices or Procedures

There are several alternatives for the treatment of abdominal aortic aneurysms: endovascular repair for individuals that have AAA disease with aortas larger than 17 mm in diameter and iliac vessels that are 7 mm or larger in diameter; implantation of a synthetic graft within the aneurysmal vessel; and medical management. Each alternative has its own advantages and disadvantages. A patient should fully discuss these alternatives with his/her physician to select the method that best meets expectations and lifestyle.

VII. Marketing History

The Ovation Abdominal Stent Graft System has been commercially available in Europe since September 2010.

The current TriVascular device, the Ovation Abdominal Stent Graft System, has not been withdrawn from any market for any reason related to the safety and effectiveness of the device. TriVascular conducted clinical studies from 2002-2004 in the U.S., Europe and Australia with a previous generation abdominal stent graft system but cancelled the studies in order to pursue design changes that were incorporated into the current device. The previous generation device was not commercially available in any market.

VIII. Potential Adverse Effects of the Device on Health

Adverse events that may occur and/or require intervention include but are not limited to:

- Acute and chronic renal failure, renal microembolism, renal insufficiency, renal artery occlusion, contrast toxicity;
- Allergic reaction and/or anaphylactoid response to x–ray contrast dye, anti-platelet therapy, device materials;
- Anesthetic complications and subsequent attendant problems (aspiration);
- Aneurysm enlargement or rupture;
- Blood or bleeding events such as anemia, gastrointestinal bleeding, retroperitoneal bleeding;
- Bowel events such as bowel ischemia, infarction, bowel necrosis, colon ischemia, paralytic or adynamic ileuses, obstruction, fistulas;
- Cardiac events and subsequent attendant problems such as congestive heart failure, volume overload, arrhythmias, myocardial infarction, chest discomfort or angina, elevations in creatinine phosphokinase (CPK), hypotension, hypertension;
- Cerebral events (local or systemic) and subsequent attendant problems such as change in mental status, cerebrovascular accident (hemorrhagic or embolic), reversible ischemic neurologic deficit, nerve injury, transient ischemic attacks, paraplegia, paraparesis, paralysis;
- Death;
- Device events such as deployment or device malfunction, stent fracture, loss of stent graft system component integrity, graft twisting and/or kinking, graft material wear, dilation, erosion, puncture, endograft occlusion, migration, dislodgement, endoleak;
- Embolic and thrombotic events (with transient or permanent ischemia or infarction) such as deep vein thrombosis, thromboembolism, microembolism, thrombophlebitis, phlebothrombosis, air embolism;
- General discomfort related to the procedure;
- Generalized inflammatory response that may be associated with elevated levels of systemic mediators of inflammation, elevated temperature;
- Genitourinary complications and subsequent attendant problems such as ischemia, erosion, fistula, incontinence, hematuria, infection;
- Hepatic failure;
- Insertion and other vascular access site complications such as infection, dissection, transient fever, bleeding, pain, delayed healing, abscess formation, hematoma, dehiscence, seroma, cellulitis, nerve injury/damage, neuropathy, neuralgia, vasovagal response, pseudoaneurysm, anastomotic false aneurysm, arteriovenous fistula;
- Impotence/ sexual dysfunction;
- Lymphatic complications and subsequent attendant problems such as lymphocele, lymph fistula;
- Multi-system organ failure;

- Neoplasm;
- Operative and post–operative bleeding and hemorrhage, coagulopathy;
- Paralysis (temporary or permanent) such as paraplegia, monoplegia, paresis, spinal cord ischemia, hemiplegia, bowel or bladder incontinence;
- Pericarditis;
- Pneumothorax;
- Possible infection–urinary tract, systemic or localized, endograft;
- Pulmonary/respiratory events and subsequent attendant problems such as pulmonary insufficiency, pneumonia, respiratory depression or failure, pulmonary edema, pulmonary embolism, atelectasis, pleural effusion;
- Radiation injury, late malignancy;
- Sepsis;
- Seroma;
- Shock;
- Spinal neurological deficit;
- Surgical conversion to open repair; and/or
- Vascular spasm or vascular injury/trauma including damage to blood vessels and surrounding tissues, atherosclerotic ulcer, vessel dissection, perforation, plaque dissection, stenosis, pseudoaneurysm, vessel occlusion, embolization, ischemia, tissue loss, limb loss, gangrenous disease, worsened or new onset claudication, edema, fistula, bleeding, rupture, death.

For the specific adverse events that occurred in the clinical studies, please see the Summary of Clinical Information below.

IX. Summary of Preclinical Studies

A. Biocompatibility

Biocompatibility testing was conducted on the Ovation Abdominal Stent Graft System to ensure that the finished device is biocompatible. Testing was performed in accordance with ISO 10993-1. The Ovation Abdominal Stent Graft System delivery system was categorized as an external communicating device in short-term contact with circulating blood (<24 hours). The stent graft and fill polymer were categorized as implant devices with permanent blood contact (>30 days). The autoinjector was categorized as a non patient contacting component. All testing performed met the requirements as specified within the applicable standard.

Table 1. Biocompatibility Test Summary – Stent Graft and Fill Polymer

Study Name	Purpose	Results	Conclusion
Cytotoxicity - MEM Using L-929 Mouse Fibroblast Cells	To evaluate the ability of the test article extract to elicit a cytotoxic response in cultured mouse fibroblast cells when conducted in accordance with the test method requirements	Test article is non-toxic. Grade 0 cytotoxicity for test and negative controls Grade 2 for intermediate controls Grade 4 for positive controls	PASS
Sensitization – LLNA Albino Swiss Mice	To assess the dermal sensitization potential of a test article using the Murine Local Lymph Node Assay (LLNA).	Not a sensitizer. Differences in test article results from the negative control were not statistically significant.	PASS
Irritation - Intramuscular Implant: 28 Day	To evaluate the local toxic effects of a biomaterial in direct contact with living muscular tissue of the rabbit for twenty eight (28) days.	Slight irritant - Implant tissue had an irritant ranking score of 3.2. All animals survived to the scheduled study endpoint. Gross observations were unremarkable.	PASS
Irritation - Intramuscular Implant: 84 Day	To evaluate the local toxic effects of a biomaterial in direct contact with living muscular tissue of the rabbit for eighty four (84) days.	Non-irritant - Implant tissue had an irritant ranking score of 2.2. All animals survived to the scheduled study endpoint. Gross observations were unremarkable.	PASS
Intracutaneous Reactivity	To determine if any chemicals that may leach or be extracted from the test article were capable of causing local irritation in the dermal tissues of the rabbit.	Non-irritant - Saline and cottonseed oil extracts had an average dermal score of 0. The difference between the mean of the control and the mean of the test group was <1.0, which is acceptable.	PASS
Systemic Toxicity (Acute) – ISO Acute Systemic Injection	To screen test article extracts for potential toxic effects as a result of a single-dose system injection in mice.	Test article is non-toxic. No fatalities, signs of clinical toxicity or body weight loss > 2 grams.	PASS
Genotoxicity - Bacterial Mutagenicity Test - AMES Assay Using Five Salmonellea Strains and Escherichia Coli	To evaluate the mutagenic potential of the test article (or its metabolites) by measuring its ability to induce back mutations at selected loci of several strains of bacteria in the presence and absence of microsomal enzymes by a method compliant with the requirements.	Non-toxic and non-mutagenic.	PASS
Genotoxicity - *In Vitro* Mouse Lymphoma Assay	To determine the ability of a test article to induce forward mutations at the thymidine kinase (TK) locus as assayed by colony growth of L5178Y mouse lymphoma cells in the presence of trifluorothymidine (TFT).	Non-toxic and non-mutagenic.	PASS

Study Name	Purpose	Results	Conclusion
Genotoxicity - *In Vivo* Mouse Micronucleus Assay	To evaluate the mutagenic potential of the test article (or its metabolites) by measuring its ability to induce back mutations at selected loci of several strains of bacteria in the presence and absence of microsomal enzymes by a method compliant with the requirements.	Non-toxic and non-mutagenic.	PASS
Implantation	To evaluate the local toxic effects of a biomaterial in direct contact with living muscular tissue of the rabbit for eighty four (84) days.	Test implant sites did not demonstrate any significant difference as compared to the control implant sites. Bioreactivity Rating = 1.5 (no reaction)	PASS
Hemocompatibility – Hematology: Hemolysis Test, Direct Contact Method	To evaluate the hemolytic potential of test articles according to the ASTM guideline.	Values of 2% or less are considered non-hemolytic. Test article % Hemolytic Index is 0.2%. Negative and Blank control % Hemolytic Index is 0.0%. *Positive control* % Hemolytic Index is 11.5%.	PASS
Hemocompatibility – Coagulation: Partial Thromboplastin Time (PTT)	To determine the time citrated plasma exposed to medical materials takes to form a clot when exposed to a suspension of phospholipid particles and calcium chloride.	Average clotting time is comparable to negative control. At this time, there are no ranges or levels that have been established as acceptable.	PASS
Hemocompatibility – Coagulation: Platelet and Leukocyte Count	To determine if medical materials exposed to whole blood would adversely affect the make-up of the platelet and leukocyte components of the blood.	Leukocyte counts were decreased (88% of baseline) and platelet counts were increased (108% of baseline) after exposure to the test article when compared to the negative control (baseline) and reference material. No acceptable levels have been established at this time.	N/A
Pyrogen – Mediated Rabbit Pyrogen	To determine if a saline extract of the test article causes a febrile response in rabbits.	Non–pyrogenic – Acceptable results are sum of temperature increase less than 3.3°C and not more than 3 rabbits with >0.5°C increase. Sum of temperature differences between 8 rabbits was 1.1°C; 1 rabbit had a >0.5°C (+0.7°C) increase.	PASS

Table 2. Biocompatibility Test Summary – Iliac Limb Stent Graft

Study Name	Purpose	Results	Conclusion
Cytotoxicity - MEM Using L-929 Mouse Fibroblast Cells	To evaluate the ability of the test article extract to elicit a cytotoxic response in cultured mouse fibroblast cells when conducted in accordance with the test method requirements.	Test article is non-toxic. Grade 0 cytotoxicity for test and negative controls. Grade 2 for intermediate controls. Grade 4 for positive controls.	PASS
Sensitization – ISO Guinea Pig	To evaluate the allergic potential or sensitizing capacity of a test article.	Test article results were equivalent to the negative control.	PASS
Irritation - Intramuscular Implant: 26 week	To evaluate a test article for the potential to induce local toxic effects in the muscle tissue of New Zealand White rabbits for a period of 26 weeks.	Non-toxic – Test article was non-toxic (rating of 0.95 after 26 weeks, <1 is defined as non-toxic) when compared to the control article. All animals survived to the scheduled study endpoint.	PASS
Intracutaneous Reactivity	To determine if chemicals that may leach or be extracted from the test article were capable of causing local irritation in the dermal tissues of the rabbit.	Non-irritant - The difference between the mean of the control and the mean of the test group was <1.0, which is acceptable.	PASS
Systemic Toxicity (Acute) – ISO Acute Systemic Injection	To screen test article extracts for potential toxic effects as a result of a single-dose systemic injection in mice.	Test article is non-toxic. No fatalities, signs of clinical toxicity or body weight loss > 2 grams.	PASS
Genotoxicity - Salmonellea Typhimurium and Escherichia Coli Reverse Mutation Assay	To evaluate the potential of a test article to include histadine reversion and tryptophan reversion in the genomes of these respective organisms.	Non-mutagenic	PASS
Genotoxicity - Mouse Lymphoma Mutagenesis Assay	To evaluate the potential of a test article to induce an increase in the formation of homozygous thymidine kinase mutants over the background rate in a mouse lymphoma mutant of the L5178Y cell line, heterozygous at the thymidine kinase locus, in the presence and absence of a metabolic activation system.	Non-mutagenic	PASS
Genotoxicity – Rodent Bone Marrow Micronucleus Assay	To evaluate the potential of a test article and/or its metabolites to induce micronuclei in maturing erythrocytes of mice.	Non-mutagenic	PASS

Study Name	Purpose	Results	Conclusion
Implantation	To evaluate a test article (solid material) for the potential to induce local toxic effects in the muscle tissue of New Zealand White rabbits for a period of 26 weeks.	Non-toxic – Test article was non-toxic (rating of 0.95 after 26 weeks, <1 is defined as non-toxic) when compared to the control article. All animals survived to the scheduled study endpoint.	PASS
Hemocompatibility – Hematology: Hemolysis Test, Direct Contact Method	To evaluate the hemolytic potential of test articles according to the ASTM guideline.	Values 2% or less are considered non-hemolytic. Test article % Hemolytic Index is 0.9%. Negative control % Hemolytic Index is 0.1%. Blank control % Hemolytic Index is 0.0%. Positive control % Hemolytic Index is 11.6%.	PASS
Pyrogen – Mediated Rabbit Pyrogen	To evaluate the test articles for the presence of materials mediated pyrogens	Non–pyrogenic – Acceptable result is no rabbits with a temperature increase >0.5°C. None of the 3 rabbits had an increase in temperature >0.5°C.	PASS

Table 3. Biocompatibility Test Summary – Delivery Catheter with Hydrophilic Coating

Study Name	Purpose	Results	Conclusion
Cytotoxicity – MEM Using L-929 Mouse Fibroblast Cells	To evaluate the ability of the test article extract to elicit a cytotoxic response in cultured mammalian cells when conducted in accordance with the test method requirements.	Test article is non-toxic. Grade 0 cytotoxicity for test and negative controls. Grade 2 for intermediate controls. Grade 4 for positive controls.	PASS
Sensitization – ISO Guinea Pig Maximization Sensitization Test	To evaluate the allergenic potential or sensitizing capacity of a test article upon exposure to guinea pigs.	Test article sensitization response equivalent to the negative controls. No abnormal clinical signs or sensitization responses were noted for any of the animals during the study.	PASS
Intracutaneous Reactivity	To determine if chemicals that may leach or be extracted from the test article were capable of causing local irritation in the dermal tissues of the rabbit.	Test article is a non-irritant. The difference in the mean test and control scores of the 0.9% Normal Saline and Cottonseed Oil extract dermal observations were less than 1.0.	PASS
Systemic Toxicity (Acute) – ISO Acute Systemic Injection	To screen test article extracts for potential toxic effects as a result of a single-dose systemic injection in mice.	Test article is non-toxic. No fatalities, signs of clinical toxicity, or body weight loss > 2 grams in control or test animals.	PASS
Hemocompatibility – Hematology: Hemolysis Test, Direct Contact Method	To evaluate the hemolytic potential of test articles according to the ASTM guideline.	Corrected hemolytic index indicates test article is non-hemolytic.	PASS
Hemocompatibility – Coagulation: Partial Thromboplastin Time (PTT)	To determine the time citrated plasma exposed to medical materials takes to form a clot when exposed to a suspension of phospholipid particles and calcium chloride.	Average clotting time is comparable or equal to negative control. At this time, there are no ranges or levels that have been established as acceptable.	PASS
Hemocompatibility – Coagulation: Platelet and Leukocyte Counts	To determine if materials exposed to whole blood would adversely affect the make-up of the platelet and leukocyte components of the blood.	Leukocyte counts were decreased (83% of baseline) and platelet counts were increased (92% of baseline) after exposure to the test article when compared to the negative control (baseline) and reference material. No acceptable levels have been established at this time.	N/A

Study Name	Purpose	Results	Conclusion
Hemocompatibility – Complement Activation C3a and SC5b Assay	To measure complement activation in Normal Human Serum (NI-IS) when serum is exposed to a test article.	The percent of normalized C3a concentration produced by the test article was 3.2% of the CVF. The percent of normalized SC5b-9 concentration produced by the test article was 0.3% of the CVF. No acceptable levels have been established at this time.	N/A
Hemocompatibility – Thrombogenicity – Thromboresistance in Beagle Dogs	To evaluate a test article for four hour thromboresistance in beagle dogs.	No adverse effects or clinical signs noted. Patency and Thrombus scores for the test article were the same as for the reference material.	PASS
Pyrogen – Mediated Rabbit Pyrogen	To determine if a saline extract of the test material causes a febrile response when administered intraveneously in rabbits using the standard USP Rabbit Pyrogen Test procedure.	Non–pyrogenic – Test material met the acceptable result of sum of temperature increase of less than 3.3°C and not more than 3 rabbits with >0.5°C.	PASS

B. Sterilization, Packaging and Shelf Life

The Ovation Abdominal Stent Graft System is a single-use device that is provided sterile to the end user. The Ovation Abdominal Stent Graft System is sterilized using a combination of ethylene oxide (EtO) [aortic body and iliac limb stent grafts and delivery systems] and electron beam irradiation (E-beam) [fill polymer and autoinjector] sterilization. The Ovation Abdominal Stent Graft System is validated to demonstrate a Sterility Assurance Level (SAL) of 10^{-6}. Packaging performance and stability testing demonstrate that the packaging designs of the Ovation Abdominal Stent Graft System are sufficient to adequately protect the device and maintain the integrity of the Ovation Abdominal Stent Graft System package throughout its shelf life claim of up to three years for the aortic body, iliac limbs, fill polymer kit and autoinjector, and one year for the iliac extensions.

Information on the testing done to validate the shelf life is included in Section C.

C. Laboratory Studies

TriVascular completed comprehensive bench, analytical and *in vivo* animal testing on the Ovation Abdominal Stent Graft System to support the safety and effectiveness of the device. The testing included the stent graft, iliac limbs, extensions and delivery system following recognized standards and guidance documents. The testing below includes results from both baseline (T=0) and accelerated aged units. An asterisk indicates testing that was performed at

the accelerated aged timepoints. The testing verified that the Ovation Abdominal Stent Graft System met product performance and design specifications.

Bench Testing

Table 4. Ovation Abdominal Stent Graft System in vitro Test Summary

Test Title	Purpose / Objectives	Acceptance Criteria	Results
Stent Radial Force*	For the aortic body, the purpose is to determine the radial force of the stent graft components to fixate to the vessel wall and thereby prevent migration of the graft. For the iliac limbs, the purpose is to determine the radial force of the stent graft component to seal and fixate the iliac vessel and prevent migration of the graft.	Aortic Body Radial Force: When the stent is compressed after being deployed to its maximum diameter, the stent will have a radial force of at least 0.4 lbf; when the stent is expanded back to its maximum vessel diameter it will have a radial force greater than 0.2 lbf. Iliac Limb and Iliac Extensions Radial Force: >0.1 lbf and <4.5 lbf for the 10mm diameter size; >0.2 lbf and <5.8 lbf for the 12mm diameter size; >0.2 lbf and <7.0 lbf for the 14mm diameter size; >0.2 lbf and <8.2 lbf for the 16mm diameter size; >0.3 lbf and <9.4 lbf for the 18mm diameter size; >0.3 lbf and <10.6 lbf for the 22mm diameter size.	PASS The stent grafts met the radial force requirements.

Test Title	Purpose / Objectives	Acceptance Criteria	Results
Dimensional Verification (diameter and length)*	To confirm the as-built devices meet the pre-determined range adequate to treat a broad number of patients.	The implant must treat patients within the following diameter and lengths: Aortic Body Diameter: Sized to treat 15.5mm to 17.4mm diameter vessels for the 20mm nominal diameter size. Iliac Limb and Extensions Diameter: Sized to treat 7.5mm to 9.4mm diameter vessels for the 10mm nominal diameter size. Sized to treat 9.5mm to 11.4mm diameter vessels for the 12mm nominal diameter size. Sized to treat 11.5mm to 13.4mm diameter vessels for the 14mm nominal diameter size. Sized to treat 13.5mm to 15.4mm diameter vessels for the 16mm nominal diameter size. Sized to treat 15.5mm to 17.4mm diameter vessels for the 18mm nominal diameter size. Sized to treat 17.5mm to 20.4mm diameter vessels for the 22mm nominal diameter size. Aortic Body Length: Length tolerance = +5 / -5 mm Iliac Limb Length: Length tolerance = +5 / -5 mm Iliac Extension Length: Length tolerance = +3 / -3 mm	PASS The stent grafts met the treatment diameter and length specifications.
Stent Graft Conformability to Vessel Wall	To confirm the stent adequately conforms to the arterial wall in diseased, non-uniform vessels.	Aortic Body: Appropriately-sized stent grafts will seal in 16 and 30mm simulated vessels. Iliac Limb and Extensions: Appropriately-sized stent grafts will seal in 8 and 20mm simulated vessels.	PASS Testing was augmented by clinical data. The stent grafts tested created a conformable seal.
Stent Graft Length to Diameter Relationship	To characterize the stent graft length to diameter relationship.	To characterize any foreshortening (length to diameter relationship) of the aortic body, iliac limb and iliac extension graft during deployment.	Characterization only
Stent Graft Modular Joint Integrity	To confirm the stent graft junctions do not separate when subjected to a worst-case blood pressure value (320 mmHg).	The aortic body with iliac limb and iliac limb with iliac extension junctions must not separate when subjected to an internal pressure of 320 mmHg.	PASS The various combinations of stent grafts tested demonstrated that the stent grafts do not separate at the load corresponding to the specified blood pressure.

Test Title	Purpose / Objectives	Acceptance Criteria	Results
Stent Graft Lumen Burst Strength	To confirm that the stent grafts do not burst when subjected to a worst-case blood pressure value (320 mmHg).	The aortic body, iliac limb, and iliac extension stent grafts must not burst below 320 mmHg.	PASS The stent grafts tested demonstrated that the stent grafts do not burst below the specified blood pressure.
Stent Graft Longitudinal Tensile Strength	To confirm that the stent grafts have adequate longitudinal tensile strength for both hemodynamic loads and delivery.	Aortic Body: The aortic body graft must have adequate longitudinal tensile strength to withstand the maximum of either hemodynamic loads resulting from a transient systolic pressure of 320 mmHg or a delivery system pull force of 2 lbf. Iliac Limb and Extensions: The iliac limb and extension graft must have longitudinal tensile strength for hemodynamic loads resulting from a transient systolic pressure of 320 mmHg.	PASS The stent grafts tested demonstrated that the stent grafts have adequate longitudinal tensile strength for both hemodynamic loads and delivery.
10-yr Device Integrity	The stent grafts must demonstrate 10-year equivalent device integrity.	Stent Graft Creep: Aortic Body and Iliac Limb Graft must not burst below a pressure of 320mmHg after 10 years simulated creep testing. Changes in either diameter or length must not affect the ability of the device to function. Aortic Body Graft Material Cyclic Loading: Material must maintain structural integrity under cyclic loading for an equivalent of a 10 year life under simulated physiologic conditions. Stent Graft Pulsatile Fatigue: The modular graft system (aortic body and limbs) should provide structural integrity under pulsatile internal pressure for 400 million cycles. Aortic Body Stent Dilatation Fatigue: Aortic Body Graft Stents should provide structural integrity under pulsatile dilatation for 400 million cycles. Iliac Limb Dilatation Fatigue: Iliac Limb stent grafts should maintain structural integrity under pulsatile dilatation for 400 million cycles. Graft Stent Attachment Fatigue: The proximal aortic body graft - stent attachment sites must be able to transfer load from the graft to the stent for 400 million cycles of cyclical load. The following test conditions define the anticipated clinical extreme conditions:	PASS The stent graft samples satisfied all of the acceptance criteria for 10-year device integrity.

Test Title	Purpose / Objectives	Acceptance Criteria	Results
		1) Angulated Graft-Stent Attachment Fatigue: The graft-stent attachment must withstand 400 million cycles of cyclic load under worst case angulated conditions of inner radius of curvature. 2) Lesser Curve Graft-Stent Attachment Fatigue: The graft-stent attachment must *withstand 400 million* cycles of cyclic load on the lesser curve of an angulated aorta. 3) Asymmetric Greater Curve Graft-Stent Attachment Fatigue: The graft-stent attachment must withstand 400 million cycles of cyclic load assuming a worst-case anchor engagement into the greater curve of an angulated aorta. *Iliac Limb Asymmetric Axial Fatigue:* Maintain structural integrity for the equivalent of a 10 year life. Stent Anchor Fatigue: The aortic body stent anchors must withstand without fracturing 400 million cycles of axial loading at physiologic conditions. Iliac Limb/Extension Overlap Fatigue: Iliac limbs with extensions in an overlap condition should maintain structural integrity without excessive wear under pulsatile *radial dilatation for* 400M cycles.	
Stent Corrosion Resistance	To demonstrate that the stents and attachment rings have adequate corrosion performance.	The stents and attachment rings must have in-vitro corrosion performance that is at least equivalent to a commercialized stent-graft device.	PASS All tested samples met the corrosion requirement.
Stent Graft Radiopacity	To confirm the implant is visible under fluoroscopy during the implant procedure to allow for proper placement.	The implant must be visible under fluoroscopy during the implant procedure to allow for proper placement.	PASS All tested samples met the radiopacity specification.
Stent Graft Kink Resistance	To confirm the iliac limb and extension stent grafts have sufficient flexibility to conform to tortuous anatomy.	Iliac Limb and Iliac Extension will accommodate curvature not exceeding 90° with a minimum inner radius of curvature of 1 cm without kinking.	PASS There was no observance of kinking at the specified radius of curvature in any of the stent grafts tested.

Test Title	Purpose / Objectives	Acceptance Criteria	Results
Stent Graft Permeability	To confirm the stent grafts maintain adequate permeability.	Aortic Body and Iliac Limb graft water entry pressure must not be less than a differential pressure of 817 mmHg.	PASS All samples met the permeability specification.
Stent Graft Inflation Channel Burst Strength	To confirm the aortic body graft inflation channels will not burst during graft inflation.	The aortic body graft inflation channels must not burst at a pressure differential less than 16psig (827mmHg).	PASS All samples met the minimum burst pressure.
Durability – Stent Maximum Strain by FEA	To confirm the stent design has adequate mechanical properties for manufacturing, delivery and fatigue performance.	The peak strains should not exceed 9% in the aortic body stent during catheter loading or under *in vivo* conditions. The peak strains should not exceed 9% in the iliac limb or extension stents during catheter loading or under *in vivo* conditions. The fatigue safety factors computed from the maximum FEA-predicted cyclic fatigue strains under challenging *in vivo* conditions and nitinol material fatigue data should be >1.	PASS All of the computed peak strains were less than the design limit. All of the computed fatigue safety factors were >1.

Table 5. Ovation Fill Polymer in vitro Test Summary

Test Title	Purpose / Objectives	Acceptance Criteria	Results
Fill Polymer Degradation Resistance*	To confirm the fill polymer has adequate degradation resistance in a test representative of 10 years in vivo duration.	The fill polymer must not degrade as measured by a loss of less than 10% mass in an *in vitro* degradation test representative of 10 years *in vivo* duration inside the graft.	PASS All samples met the fill polymer degradation resistance specification.
Fill Polymer Radiopacity	To ensure adequate visibility to aid in verifying the complete deployment of the implant.	The fill polymer must have adequate radiopacity at time of deployment to indicate filling of the graft with fill polymer.	PASS All deployments met the visibility acceptance criteria.
Fill Polymer Dimensional Stability*	To ensure dimensional stability such that exclusion of the aneurysm and sufficient aortic bloodflow is maintained throughout the life of the implant.	The fill polymer must not shrink during cure by an amount sufficient to cause loss of seal. It also must not swell during or after cure by an amount sufficient to cause loss of graft patency or structural integrity.	PASS All samples met the dimensional stability specifications. Testing was augmented by clinical data.
Fill Polymer Ease of Mixing	To confirm the fill polymer mixing force is within ergonomic limits.	The maximum syringe plunger force to mix the fill polymer must not exceed 16 lbf and an average value of 11 lbf.	PASS All samples met the mix force specification.
Fill Polymer Cure Time*	To confirm the fill polymer, once mixed, consistently cures (gels) within a pre-determined range.	The fill polymer kit must provide adequate mixing to the fluid as it passes from one syringe to another as verified through a fill polymer cure time of 13±2 minutes.	PASS The fill polymer mixing was confirmed through acceptable cure time.
Fill Polymer Balloonability Time	To confirm that the stent graft is balloonable within 15 minutes of mixing the fill polymer.	The stent graft must be balloonable under test protocol conditions within 15 minutes after demate of the delivery system from the graft with a properly sized balloon.	PASS Testing demonstrated that all filled grafts maintained structural integrity when ballooned after the filling process in accordance with IFU recommendations.

Test Title	Purpose / Objectives	Acceptance Criteria	Results
Fill Polymer Modulus*	To confirm the fill polymer provides mechanical support and seal conformability between the stent graft and the aortic wall.	The fill polymer must have mean elastic modulus (200– 500 psi when cured) and storage modulus (87-109 psi [6.0-7.5X10^{5}Pa]).	PASS All samples met the modulus criteria.

Table 6. Ovation Delivery System in vitro Test Summary

Test Title	Purpose / Objectives	Acceptance Criteria	Results
Delivery System Placement Accuracy of Stent Graft*	To confirm successful placement of the stent graft in the in vivo environment.	The system must permit consistent and accurate deployment of the implant to within: +5/-0 mm of the intended proximal aortic landing site ±5 mm of the distal iliac landing site	PASS All samples were successfully deployed within the specification requirements of the proximal deployment target.
Delivery System Hemostasis*	To confirm the hemostatic seals on the proximal end of the sheath and the guidewire lumen will not leak.	The hemostatic seals on the proximal end of the sheath and the guidewire lumen shall not leak water at a rate greater than 7 ml/min.	PASS All samples satisfied the water leak rate specification limit.
Delivery System Radiopacity	To ensure adequate visibility to aid in the accurate placement of the implant.	The delivery system must have sufficient radiopacity as evaluated under fluoroscopy to orient the implant, to confirm sheath retraction, to confirm fill tube demate (aortic body) and to confirm catheter withdrawal from the implant.	PASS Visibility for all deployments met the acceptance criteria.
Delivery System Unsheathing Force (Force to Deploy)*	To confirm the force required to retract the sheath is within appropriate ergonomic limits.	The unsheathing force shall not exceed the minimum tensile strength of the sheath tubing and shall not exceed an ergonomic limit of 12 pounds.	PASS All stent graft samples were successfully deployed with unsheathing forces below specification.
Delivery System Kink Resistance*	To confirm the catheter can be advanced to the implant site such that it does not kink, compromise the deployment, or damage the implant.	The catheter can be advanced through a tortuous model and does not kink in a way that compromises the deployment or damages the implant.	PASS All devices were advanced through the tortuous flow model without kinking. No deployments were compromised by delivery system kinks, nor were any implants found to be damaged during post-simulated use inspection.
Delivery System Profile*	To confirm the delivery system profiles are within labeled requirements.	The delivery system outer diameters (ODs) must not exceed the labeled OD.	PASS All delivery system samples passed the attribute profile test.
Delivery System Length*	To confirm the as built delivery system lengths will provide positioning of the implant to the target location within most anatomical settings.	Working Length: Aortic Body delivery system: 52cm - 58cm Iliac Limb / Iliac Extension delivery system: 50cm - 55cm	PASS The delivery systems met the dimensional specifications for length.
Delivery System Pushability*	To confirm the delivery system transmits sufficient pushability to position the catheter to the correct target location for an accurate placement of the stent graft.	The delivery system must transmit sufficient pushability to position the catheter at the correct elevation within the model for an accurate placement of the stent graft.	PASS All delivery system samples met the pushability specifications.

Test Title	Purpose / Objectives	Acceptance Criteria	Results
Delivery System Trackability*	To confirm the delivery system has sufficient trackability to position the catheter, track over the guide wire and accurately position the implant.	The delivery system must have sufficient trackability to position the catheter and accurately position the implant within the model. When placed in a *tortuous model*, the delivery system can sufficiently track over the guide wire to locate the implant at the intended deployment location.	PASS All delivery system samples met the trackability specifications.
Delivery System Torquability*	To confirm the aortic body delivery system has sufficient torquability to position the catheter and accurately position and orient the implant.	The Aortic Body delivery system must have sufficient torquability to position the catheter and accurately position and orient the implant within the model. When placed in a tortuous model, the distal end of the sheathed catheter must rotate an amount to match the rotation of the handle and flushport.	PASS All delivery system samples met the torquability specifications.
Delivery System Bond Strengths*	To confirm the delivery system has adequate bond tensile strengths to permit access, deployment and withdrawal of the stent graft.	Sheath to Sheath Fitting: Minimum Tensile Strength: 15 lbf Radiopaque Marker Band on Lumens: Minimum Tensile Strength: 1.5 lbf All other bonded components: Minimum Tensile Strength: 5 lbf Nosecone: Minimum Torsional Strength: 5 lbf after rotational test Sheath to Sheath Fitting: Minimum Torsional Strength: 12.2 in-oz Inner Catheter Proximal Band (Aortic Body only) Minimum Torsional Strength: 12.2 in-oz	PASS The delivery system bonds have adequate strength to reliably meet functional specifications.
Delivery System De-Mate Stop Force*	To confirm that the aortic body delivery system fill tube does not disconnect from the aortic body graft at a force below the designated specification.	The system must not allow the fill tube to demate from the aortic body graft at a force less than 2 lbs prior to releasing the stop.	PASS All aortic body delivery systems passed the demate stop force requirement.
Delivery System De-Mate Force*	To confirm the aortic body permits consistent withdrawal of the delivery system without causing damage to or dislodgement of the implant.	The system must permit consistent withdrawal of the delivery system without causing damage to or more than 5 mm dislodgement distance of the implant.	PASS The delivery system samples met the demate force specification: No movement of the stent-graft was observed during de-mate for any of the aortic body samples.
Simulated Use*	To confirm the delivery system can deploy and fill the stent graft within an *in vitro* model without failure to: access, deploy the stents, fill the graft or withdraw the catheter.	The delivery system shall deploy and fill the stent graft within the *in vitro* model without failure to: access, deploy the stents, fill the graft or withdraw the catheter.	PASS In all devices tested, access, deployment, fill, and catheter withdrawal were successful.

Test Title	Purpose / Objectives	Acceptance Criteria	Results
Delivery System Auto-Injector Pressure Range*	To confirm the autoinjector supplies adequate force to the syringe in order to fill the stent graft with fill polymer while not exceeding the burst pressure of the stent graft inflation channels.	The autoinjector must supply a 12-16 psig soon after insertion of syringe into autoinjector.	PASS All auto-injector samples met the specifications.
Catheter Guidewire Compatibility*	To confirm the device can track over a commonly available guidewire size in order to aid in advancing the device to the treatment site.	The guidewire lumen must accept a 035" guidewire with little or no resistance.	PASS All delivery system samples met the guidewire compatibility specifications.
Catheter Luer Compatibility*	To confirm compatibility with a commonly available connector type for elements of the catheter which interface with other accessories.	The catheter must be compatible with standard luer fittings in order to interface with other accessories.	PASS All delivery system samples met the luer compatibility specifications.
Introducer System Compatibility*	To confirm that, in the event an introducer is required, delivery system can fit through commercially available introducers.	Delivery system must fit through a commercially available introducer.	PASS All delivery system samples passed through the appropriately-sized introducer sheath.
Graft Magnetic Resonance Imaging Safety	To confirm the implant will not migrate or heat significantly in the presence of magnetic resonance.	The implant must pose no known hazards in an MR environment pursuant to an "MR Conditional" label status.	PASS The implants are deemed MR Conditional.

In vivo Animal Testing

The objectives of the animal studies were to evaluate device deployment and chronic implant performance in ovine models. Preclinical *in vivo GLP and non-GLP* animal testing utilizing early and final versions of the fill material was conducted in 27 animals to meet these objectives. The devices used in the animal study were functionally equivalent to the Ovation Abdominal Stent Graft System. Therefore, the performance of the devices used in the animal studies is indicative of the current system performance. The results demonstrated successful device delivery, graft patency, absence of migration or kinking, absence of abnormalities on end organ histopathology, and/or normal healing. The results support the safety and expected performance of the Ovation Abdominal Stent Graft System. The following table outlines the *in vivo* animal testing performed.

Table 7. In vivo (Animal) Test Summary

Study	Number of Animals	Objectives	Results	Conclusion
DVP-2144; Chronic GLP study of in ovine Stent Graft and Fill Polymer Vasculature utilizing a prototype delivery system to the final marketed delivery system[a]	18	Evaluate the deployment of the stent grafts for the following items: • Successful device placement • Ease of delivery • Deployment accuracy • Device radiopacity • Delivery system flexibility Verify that the stent grafts maintain luminal patency and	The test devices were deployed successfully, maintained patency, did not migrate, kink significantly, or elicit an abnormal host response when deployed in the ovine vascular system.	The study objectives were met.

Study	Number of Animals	Objectives	Results	Conclusion
		physiological function. Evaluate the stent grafts for migration and kinking. Determine the response of the host and the prosthesis in the vascular system.		
DVP-2150: a 30-day chronic GLP safety study of Stent Graft and Fill Polymer *in ovine* vasculature	3	Evaluate the deployment of the stent grafts and fill polymer. Verify that the stent grafts maintain patency and physiological function. Evaluate the stent grafts for migration and kinking. Determine the response of the host and the prosthesis in the vascular system.	The study endpoints were successful delivery, graft patency, absence of migration or kinking, and normal healing. Delivery was successful in all animals treated. All endpoints of the study were satisfied.	The study objectives were met.
DVP-2151: a 90-day chronic GLP study of Stent Graft and Fill Polymer in ovine vasculature	3	Evaluate the deployment of the stent grafts and fill polymer. Verify that the stent grafts maintain patency and physiological function. Evaluate the stent grafts for migration and kinking. Determine the response of the host and the prosthesis in the vascular system.	The study endpoints were successful delivery, graft patency, absence of migration or kinking, and normal healing. Delivery was successful in all animals treated. All endpoints of the study were satisfied.	The study objectives were met.
DVP-2154: a 30-day non-GLP chronic study of Stent Graft and Fill Polymer in ovine vasculature[b]	3	Determine the outcome resulting from a bolus release of soluble fill material into the ovine vasculature during the cure process.	A bolus release of the fill polymer did not produce angiographic changes either acutely or chronically, and did not produce any abnormalities evident on end organ histopathology. There did not appear to be any adverse response of the ovine vascular system or organs to the worst-case fill polymer spill exposure.	The study objectives were met.

a. *The delivery system used in the animal studies was determined to be functionally similar to the system tested in clinical investigation. Differences included the addition of lubricous coating, switch from PEBAX to ABS handle material, and the addition of a DeMate prevention feature (release of one additional wire before withdrawal).*

b. *The FDA was not obliged to accept this non-GLP study and utilized regulatory discretion and additional scrutiny in deciding whether it could be utilized. This study provided adjunctive, supporting data to the additional GLP studies. It was conducted to address a risk evaluation of a device fault condition and is not relevant to the normal/intended use of the device.*

X. Summary of Clinical Information

A. Introduction

The Ovation Abdominal Stent Graft System US Clinical Study (G090239) information summarized below includes clinical data gathered for the pivotal clinical study IDE report. The

pivotal (Phase II) clinical study data was presented to support the device safety profile in HDE H100008. Information from a feasibility study of a previous generation device was considered regarding the longer-term safety and probable benefit of the unique device characteristics. The feasibility and pivotal studies are summarized in **Table 8.**

Table 8: Clinical Use of the Ovation Abdominal Stent Graft System

Clinical Study	Device Design	Study Design	Objective	Number of Sites	Number of Subjects
Pivotal (Phase II)	Ovation Abdominal Stent Graft System	Prospective, consecutively enrolling, non-randomized multi center, international clinical study	Evaluate safety and effectiveness	28	113
Feasibility	ENOVUS Abdominal Stent Graft System	Prospective, consecutively enrolling, non-randomized multi center, international feasibility study	Evaluate the preliminary safety of a previous generation device	7 (US) 7 (OUS)	43 (US) 36 (OUS)

The feasibility clinical study was considered informative for the HUD as longer-term data supported the ability of the unique sealing mechanism of the graft to exclude the aneurysm sac.

The pivotal clinical study includes the range of aortic body sizes (20-34 mm). The data from the pivotal study were considered in the review of the HUD size (20 mm diameter) because the features of the smaller size are the same as for the rest of the product line. Although the data do not directly demonstrate the safety and effectiveness of the 20 mm device size, they are useful to characterize the product line. Regarding delivery and deployment, the mechanism is the same for the smaller and larger devices, with the french size the same (14F) for the majority of device diameters. With respect to vascular access, the pivotal clinical study included 27% of patients with access vessel sized smaller than 7mm (i.e., $\geq$ 4.6 mm).

To date, four patients have received the 20 mm device in the Ovation Abdominal Stent Graft System clinical study. Data for two of the four were available for inclusion in the summary below.

B. Summary of pivotal clinical study design

The Ovation Abdominal Stent Graft System pivotal clinical study is a prospective, consecutively enrolling, non-randomized multi-center clinical evaluation of the safety and effectiveness of the Ovation Abdominal Stent Graft System when used in the treatment of patients with AAA.

The Ovation Abdominal Stent Graft System clinical subject population is being evaluated for: death; myocardial infarction; stroke; renal failure; respiratory failure; paralysis; bowel ischemia; procedural blood loss; successful device delivery and deployment; endoleaks; stent graft migration; AAA enlargement; AAA rupture; conversion to open repair; secondary procedures; device integrity; blood loss; duration of procedure; length of hospital stay; type of anesthesia; and type of vascular access used to implant the device. The data associated with these outcomes are captured on the case report forms.

Enrollment in the TriVascular Ovation Abdominal Stent Graft System pivotal clinical study is limited to patients who meet the following inclusion and exclusion criteria as outlined in **Table 9**.

Table 9: Inclusion and Exclusion Criteria

Inclusion	Exclusion
Patient is ≥ 18 years of age.	Patient has a dissecting aneurysm.
Patients who are male or non-pregnant female.	Patient has an acutely ruptured aneurysm.
Patient has signed an Institutional Review Board (IRB) approved Informed Consent Form.	Patient has an acute vascular injury.
Patient is considered by the treating physician to be a candidate for elective open surgical repair of the AAA (i.e., category I, II, or III per American Society of Anesthesiology (ASA) classification). ASA category IV patients may be enrolled provided their life expectancy is greater than 1 year.	Patient has a need for emergent surgery.
Patient has an infrarenal abdominal aortic aneurysm that meets ***at least*** one of the following: • Abdominal aortic aneurysm ≥5.0 cm in diameter • Aneurysm has increased in size by 0.5 cm in last 6 months. • Maximum diameter of aneurysm exceeds 1.5 times the transverse dimension of an adjacent non-aneurysmal aortic segment	Patient has a known thoracic aortic aneurysm or dissection.

Inclusion	Exclusion
Patient has patent iliac or femoral arteries that allow endovascular access with the TriVascular Ovation Abdominal Stent Graft System.	Patient has a mycotic aneurysm or has an active systemic infection.
Patient has a suitable non–aneurysmal proximal aortic neck length of ≥ 7 mm inferior to the most distal renal artery ostium.	Patient has unstable angina.
Patient has a suitable non-aneurysmal distal iliac artery length (seal zone) of ≥10 mm. The resultant repair should preserve patency in at least one hypogastric artery.	Patient has had a myocardial infarction (MI) and/or stroke (CVA) within the past 6 months.
Patient has a suitable non–aneurysmal proximal aortic neck luminal diameter between 16 and 30 mm.	Patient has a major surgical or interventional procedure planned ≤30 days of the AAA repair.
Patient has suitable non–aneurysmal distal iliac luminal diameters between 8 and 20 mm.	Patient has history of connective tissue disease (e.g., Marfan's or Ehler's–Danlos syndrome).
Patient meets the following anatomic criteria: the distance from the most distal renal artery to most superior internal iliac artery measurement is at least 13 cm.	Patient has history of bleeding disorders or refuses blood transfusions.
Patient has juxtarenal aortic neck angulation ≤ 60° if proximal neck is ≥10 mm and ≤ 45° if proximal neck is <10 mm.	Patient has dialysis dependent renal failure or baseline serum creatinine level >2.0 mg/dl.
Patient must be willing to comply with all required follow-up exams.	Patient has a known hypersensitivity or contraindication to anticoagulation or contrast media that is not amenable to pre-treatment.
	Patient has a known allergy or intolerance to polytetrafluorethylene (PTFE), PEG-based polymers, fluorinated ethylene propylene (FEP) or nitinol.
	Patient has a body habitus that would inhibit X–ray visualization of the aorta.
	Patient has a limited life expectancy of less than 1 year.
	Patient is currently participating in another investigational device or drug clinical trial.
	Patient has other medical, social or psychological conditions that, in the opinion of the investigator, preclude them from receiving the pre-treatment, required treatment, and post-treatment procedures

Inclusion	Exclusion
	and evaluations.

Follow-up intervals for the Ovation Abdominal Stent Graft System pivotal clinical study are 1, 6, and 12 months following the initial implant procedure, then annually through 5 years.

Follow up evaluations consist of X-ray and contrast enhanced CT, along with physical, device/aneurysm, laboratory and adverse event assessment.

C. Accountability of Pivotal Cohort

Under the HDE, data were available for 113 of the 123 subjects enrolled in the pivotal study and are represented in **Tables 10-17**. Of the subjects eligible for follow up, 86% (96/112) completed follow up at 1 month, 64% (42/66) completed follow up at 6 months and 50% (5/10) completed follow up at 1 year. The eligible subjects within the interval analysis window who have not completed follow-up are either pending the actual visit or the data entry had not been completed at the time of this interim report. **Table 10** below outlines interim patient accountability.

Table 10: Subject and Imaging Accountability – Ovation Treatment Group[1]

	Subject follow-up				Subjects with imaging performed (Site Reported)		Subjects with adequate imaging to assess endpoint (Site Reported)				Subject events occurring before next visit					
Interval (Analysis Window)	Eligible	Within Window Visit Pending	Clinical Follow-up	Imaging Follow Up	CT Imaging	KUB Imaging	AAA Enlargement	Endoleak	Migration	Technical Observation[2]	No Implant	Conversion to Surgery	Death	Withdrawal	Lost to Follow-up	Not Due for Next Visit
Subjects	113										0					
Events after implant but before a 1 Month visit												0	1	0	0	0
1 Month (Day 1-90)	112	16 (14%)	96 (86%)	89 (79%)	89 (79%)	87 (78%)		89 (79%)		89 (79%)						
Events after 1 Month visit but before a 6 Month visit												0	1	0	0	45
6 Month (Day 91-304 days	66	24 (36%)	42 (64%)	41 (62%)	39 (59%)	40 (61%)	36 (55%)	38 (58%)	40 (61%)	37 (56%)						
Events after 6 Month visit but before a 12 Month visit												0	0	0	0	56
12 Month (≥ 305 days)	10	5 (50%)	5 (50%)	5 (50%)	5 (50%)	4 (40%)	4 (40%)	5 (50%)	5 (50%)	5 (50%)						

[1] At the time of this interim analysis, sample size varies for each of the time points above and in the following tables due to subject availability for follow up, as well as the ongoing data entry process.
[2] Technical observations assessed by imaging include stent graft kinking and stent graft stenosis.

D. Study Population Demographics and Baseline Parameters

Baseline data regarding demographics, medical history, aneurysm characteristics and devices sizes used are summarized in **Tables 11-17**.

Table 11: Baseline Demographics

Demographic	Treatment Group
Age (at enrollment)	
Average Years ± SD	73.5 ± 7.6
Range	54, 95
Gender	
Male % (n/N)	85.8% (97/113)
Female % (n/N)	14.2% (16/113)

Table 12: Medical History

Comorbid Conditions	Treatment Group % (n/N)
Cardiovascular Disease	
Coronary Artery Disease	38.9% (44/113)
Valvular Heart Disease	6.2% (7/113)
Angina	7.1% (8/113)
Cardiomyopathy	4.4% (5/113)
Congestive Heart Failure	6.2% (7/113)
Myocardial Infarction	15.9% (18/113)
Arrhythmia	21.2% (24/113)
Hypertension	80.5% (91/113)
Hypotension	0.9% (1/113)
Hyperlipidemia	66.4% (75/113)
Peripheral Vascular Disease, Stroke and Aneurysm History	
Peripheral Vascular Disease	17.7% (20/113)
Carotid Artery Disease	10.6% (12/113)
Transient Ischemic Attack (TIA)	4.4% (5/113)
Stroke (CVA)	6.2% (7/113)
Family History of Aneurysms	3.5% (4/113)
Aneurysms (AAA)	100% (113/113)
Pulmonary History	
Chronic Obstructive Pulmonary Disease (COPD)	26.5% (30/113)
Smoking (past smoking history not reported for all subjects)	42.5% (48/113)
Gastrointestinal, Genitourinary, Reproductive History	
Renal Failure/Insufficiency	11.5% (13/113)
Diabetes	21.2% (24/113)
Alcohol Abuse	1.8% (2/113)
Hematological Problems (hemorrhage, coagulopathy disorder, anemia, platelet disorder)	8.0% (9/113)
Other Significant Medical Condition	68.1% (77/113)

Table 13: Baseline Anatomical Characteristics

Characteristic	Treatment Group
Aortic Neck Length (mm)	
N	105
Mean ± SD	25.6 ± 12.3
Median	24
Min, Max	7, 76
Aortic Neck Diameter (mm)	
N	60*
Mean ± SD	22.8 ± 3.2

Median	22.4
Min, Max	17, 30
Aortic Neck Angle (degrees)	
N	86*
Mean ± SD	18.8 ± 14.4
Median	15
Min, Max	0, 60
Right External Iliac Diameter (mm)	
N	97
Mean ± SD	8.12 ± 1.72
Median	8
Min, Max	4.4, 12.5
Left External Iliac Diameter (mm)	
N	97
Mean ± SD	8.32 ± 1.79
Median	8.2
Min, Max	5, 13
AAA Maximum Diameter (mm)	
N	105
Mean ± SD	55.1 ± 8.2
Median	54
Min, Max	40, 94
AAA Maximum Diameter (mm)	**Treatment Group % (n/N)**
<50 mm	13.3% (14/105)
50 mm to 59 mm	73.3% (77/105)
60 mm to 69 mm	8.6% (9/105)
70 mm to 79 mm	1.9% (2/105)
80 mm to 89 mm	1.0% (1/105)
≥ 90 mm	1.9% (2/105)

*N represents data available as of the date of the report. Data entry was in process for these data points in 8 subjects at the time of the report.

A total of 113 Aortic Bodies (**Table 14**) and 251 Iliac Limbs (**Table 15**) were implanted in 113 subjects. A total of 21 subjects received Iliac Limbs as extensions **(Table 16).**

Table 14: TriVascular Ovation™ Aortic Bodies Implanted

Aortic Body (Diameter, mm)	Number of Devices % (n/N)
34	9.7% (11/113)
29	27.4% (31/113)
26	36.3% (41/113)
23	24.8% (28/113)
20	1.8% (2/113)

Table 15: TriVascular Ovation™ Iliac Limbs Implanted

Iliac Limb (Diameter, mm)	Number of Devices % (n/N)
22	7.6% (19/251)
18	14.0% (35/251)
16	16.3% (41/251)
14	36.3% (91/251)
12	19.5% (49/251)
10	6.4% (16/251)

Table 16: TriVascular Ovation™ Iliac Limb Extensions Implanted

Iliac Limb Extension (Diameter, mm)	Limb Extension Number of Devices % (n/N)
22	8.0 %(2/25)
18	20.0% (5/25)
16	12.0% (3/25)
14	32.0% (8/25)
12	28.0% (7/25)

A total of 21 subjects were implanted with >2 iliac limbs.

Table 17: Total Number of Devices Implanted at Initial Procedure

Number of Devices Implanted at Initial Procedure	Number of Subjects % (n/N)
1	0% (0/113)
2	0% (0/113)
3	81.4% (92/113)
4	15.1% (17/113)
5	3.5% (4/113)
≥6	0% (0/113)

E. Safety and Probable Benefit Information

Serious adverse events in the clinical study report subject cohort available at the time of report date are presented in **Table 18**. A serious adverse event is defined as one that suggests a significant hazard or side effect, regardless of the investigator or sponsor's opinion on the relationship to the investigational product. This includes, but may not be limited to, any event that is fatal; is life-threatening; requires or prolongs (>48 hours) inpatient hospitalization; is a persistent or significant disability or incapacity; and/or is considered an important medical event.

Table 18: Serious Adverse Events (SAE)*

Serious Adverse Event Category	(0-30 Days)	(31-360 Days)
Blood and Lymphatic	2	0
Cancer	0	1
Cardiac	2	2
Device	0	2
Gastrointestinal	1	0
Genitourinary	1	0
Infection (other than wound)	0	1
Neurological	0	0
Orthopedic	0	0
Pulmonary	2	0
Vascular and Aortic	0	0
Wound	0	0
Other**	14	6

* No SAEs occurred in subjects implanted with the 20mm device.
**Currently includes chronic anemia; air in intestine; heavy dyspnea; anaphylactic shock; polymer leak from main body of stent graft; vasospasm; heparin induced thrombocytopenia; gastrointestinal bleed; abdominal sepsis; acute leukemia; cutaneous rash; cerebral cramps/coma; dilated biliary ducts; pseudoaneurysm; nausea/vomiting; anemia; respiratory distress; hypoxia; hematochezia.

Two (2) serious adverse events in the "other" category (polymer leak from the aortic body of the stent graft and anaphylactic shock) were reported by the investigator for one subject. The subject was receiving an implant of a 26mm TriVascular Ovation Abdominal Stent Graft System and fill polymer discharge occurred due to a disconnection of the fill tube that injects the fill material polymer into the aortic body stent graft. There were no embolic consequences and the aneurysm was successfully excluded. The subject was transferred to ICU post procedure. On post-operative day 16, the subject experienced disseminated intravascular coagulation and abdominal sepsis and expired the following day (refer to Table 20 below). Upon review by the Data Safety Monitoring Board (DSMB), the members recommended that the events be reported to FDA as an unanticipated adverse device effect (UADE). In response, TriVascular modified a component of the delivery system and its connection to the delivery system to address the fill tube disconnection. No additional UADEs or fill polymer discharge events have been reported to date. The device events reported under the HDE are presented in **Table 19**.

Table 19: Device Event Reports*

Description	0-30 Days	31-365 Days
Technical Failure	0	
Endoleaks (Type I and/or III)	1	0
Migrations	0	0
AAA Enlargement	0	1
Rupture	0	0

Description	0-30 Days	31-365 Days
Device Integrity	0	1
Secondary Interventions	1	2
Conversion to Open Surgical Repair	0	0

* No device events occurred in subjects implanted with the 20mm device.

Technical success is defined as successful delivery and deployment of one aortic body and two iliac limbs. As presented in Table 19, there are no technical failures and all subjects received a minimum of one aortic body and two iliac limbs. In one subject, a Type IA (proximal) endoleak was reported at the 1 month follow up and successfully treated with coil embolization several weeks later with no clinical sequelae. In another subject, an iliac limb stenosis was reported at the 30 day follow up and considered by the investigator to be procedure related. The stenosis was successfully treated with angioplasty and stent placement with no clinical sequelae. In a third subject, a device thrombus was considered by the investigator to be related to the study device. The subject was successfully treated with lysis and stenting with no clinical sequelae. Upon review of the imaging and procedural information for this case, the Clinical Events Committee (CEC) determined that this event was procedure related and not device related. In a fourth subject with a Type II endoleak, an increase of >5mm in the diameter of the aneurysm was reported. The imaging is being re-evaluated by the core lab due to the challenging anatomic morphology. No treatment or adverse sequelae has been reported. A single strut fracture in the proximal stent was identified in one study subject with no clinical sequelae and continued aneurysm exclusion. The evaluation of the source of the fracture identified that the probable root cause is an isolated incident related to a material void in the nitinol raw tubing and is not related to device design.

Table 20: Mortality

Mortality	0-30 Days	31-365 Days
All Cause	N/A	1
AAA Related	1	0

Two (1.8%) subjects died during the study. One subject died from disseminated intravascular coagulation (DIC) and abdominal sepsis as described under Table 18 above. One subject died from reported "cerebral cramps", coma, and gastrointestinal bleed at 178 days post study procedure. These events were considered by the investigator to be related to pre-existing conditions including liver cirrhosis, and cerebral, coronary and peripheral artery disease.

Of the four patients who have received the 20 mm device in the Ovation Abdominal Stent Graft System clinical study, one Type II endoleak was reported for one subject with no

treatment or adverse sequelae reported. No additional events have been reported in the other subjects receiving a 20 mm device.

F. Gender Discussion

Because Abdominal Aortic Aneurysm disease is predominately found in males, TriVascular evaluated possible sex/gender-based differences in outcome of treatment with the Ovation Stent Graft. Information on the gender distribution of abdominal aortic aneurysm (AAA) in the general population was estimated from Centers for Disease Control and Prevention, National Hospital Discharge Survey 2010.

During the past 12 years, the frequency of diagnosed nonruptured AAAs has remained fairly constant, ranging from 104,000 to 131,000 cases per year with females representing approximately 31% of patients. Based on the last estimate provided in 2007, the percentage of females receiving open surgical AAA repair is 29%.[1] The percentage of females receiving endovascular AAA repair is 14% (from 2006 estimates).[2] The distribution of the information compares to the gender distribution in the Ovation Abdominal Stent Graft System clinical study as the female study subjects comprise 14.2% of the study population (as of the date of the clinical study report). The percentage of females compared to males treated in the clinical study with the Ovation Abdominal Stent Graft System is consistent with or higher than studies of other devices for the treatment of AAA.

Device-related serious adverse events reported by gender available as of the report date are presented in **Table 21**.

Table 21: Device-related Serious Adverse Events Reported by Gender

Characteristic	0-30 Days (n=113)		31-180 Days (n=43)		181-365 Days (n=5)	
	Male	Female	Male	Female	Male	Female
Gender	86% (97/113)	14% (16/113)	86% (37/43)	14% (6/43)	80% (4/5)	20% (1/5)
Number of Device-related SAEs	1	1	1	1	0	0
Device-related SAE's	Type IA Endoleak	Fill Polymer Leak	Device Thrombus*	Device Integrity	---	---

*Device thrombus was adjudicated by the CEC as procedure related and was not considered related to the study device.

[1] Centers for Disease Control and Prevention. National Hospital Discharge Survey. 2010; http://www.cdc.gov/nchs/nhds/nhds_products.htm.
[2] Ibid.

Sufficient patient numbers are not yet available to determine whether there is a difference in outcomes between male and female subjects.

XI. Risk Probable Benefit Analysis

The combination of preclinical and clinical experience with the Ovation Abdominal Stent Graft System supports the safety of the device. Preclinical bench testing was performed on the Ovation Abdominal Stent Graft System in accordance with applicable guidance documents and national and international standards. The testing confirmed that the Ovation Abdominal Stent Graft system met performance and design specifications.

Preclinical *in vivo GLP and non-GLP* animal testing utilizing early and final versions of the fill material was performed to evaluate the acute and chronic performance of the device design. The study endpoints were successful delivery, graft patency, absence of migration or kinking, normal healing and an evaluation of a bolus release of the fill polymer. The results support the safety of the Ovation Abdominal Stent Graft System.
Biocompatibility testing was performed on the materials of the Ovation Abdominal Stent Graft System in accordance with the applicable standard. All testing met the requirements as specified in the applicable standard, ensuring the finished device is biocompatible.

Sterilization, packaging, and shelf life testing were performed on the Ovation Abdominal Stent Graft System. The testing demonstrated that the Ovation Abdominal Stent Graft System maintains a Sterility Assurance Level of 10^{-6}. The results of shelf life testing confirmed that the Ovation Abdominal Stent Graft System and Iliac extensions maintain functionality and packaging integrity throughout 3 year and 1 year shelf life, respectively.

The type and number of serious adverse events in the on-going clinical investigation thus far supports the safety of the TriVascular Ovation Abdominal Stent Graft System. The technical success confirms that the device can be consistently and accurately deployed. The absence of migration, rupture or conversion to open surgical repair with the TriVascular Ovation Abdominal Stent Graft System within 6 months of implantation supports device performance.

The profile range of commercially available endovascular devices is 18 - 25.5 F OD. These sizes are not suitable for patients with smaller anatomy. The alternative options are medical management or open surgical repair. The Ovation Abdominal Stent Graft System offers physicians the option of treating patients with smaller anatomy who might otherwise require open surgical repair.

In summary, it is reasonable to conclude that the probable benefit to health from using the device in accordance with the instructions for use for the target population outweighs the risk of illness or injury, when taking into account the probable risks and benefits of alternative forms of treatment.

XII. Panel Recommendation

In accordance with the provisions of section 515(c)(2) of the act as amended by the Safe Medical Devices Act of 1990, this HDE was not referred to the Circulatory System Devices Panel, an FDA advisory committee, for review and recommendation because the information in the HDE substantially duplicates information previously reviewed by this panel.

XIII. CDRH Decision

CDRH has determined that based on the data submitted in the HDE, the Ovation Abdominal Stent Graft System will not expose patients to an unreasonable or significant risk or illness or injury, and the probable benefit to health from using the device outweighs the risks of illness or injury. The applicant's manufacturing facility was inspected and was found to be in compliance with the Quality System Regulation (21 CFR 820). Therefore, CDRH issued an approval order on November 1, 2011.

XIV. Approval Specifications

Directions for use: See the Physician's Labeling.

Hazards to Health from Use of the Device: See Indications, Contraindications, Warnings, Precautions and Adverse Events in the labeling.

Postapproval Requirements and Restrictions: See Approval Order.