March 20, 2019

F&S Medical Solutions, LLC
% Tom Renner
Quality, Efficiency & Regulatory Affairs Consultant
Vision28
915 SW Rimrock Way STE 201 PMB 402
Redmond, OR 97756

Re: K182511
Trade/Device Name: SimplCath
Regulation Number: 21 CFR§ 876.5130
Regulation Name: Urological Catheter and Accessories
Regulatory Class: II
Product Code: GBM
Dated: February 28, 2019
Received: March 5, 2019

Dear Tom Renner:

We have reviewed your Section 510(k) premarket notification of intent to market the device referenced above and have determined the device is substantially equivalent (for the indications for use stated in the enclosure) to legally marketed predicate devices marketed in interstate commerce prior to May 28, 1976, the enactment date of the Medical Device Amendments, or to devices that have been reclassified in accordance with the provisions of the Federal Food, Drug, and Cosmetic Act (Act) that do not require approval of a premarket approval application (PMA). You may, therefore, market the device, subject to the general controls provisions of the Act. Although this letter refers to your product as a device, please be aware that some cleared products may instead be combination products. The 510(k) Premarket Notification Database located at https://www.accessdata.fda.gov/scripts/cdrh/cfdocs/cfpmn/pmn.cfm identifies combination product submissions. The general controls provisions of the Act include requirements for annual registration, listing of devices, good manufacturing practice, labeling, and prohibitions against misbranding and adulteration. Please note: CDRH does not evaluate information related to contract liability warranties. We remind you, however, that device labeling must be truthful and not misleading.

If your device is classified (see above) into either class II (Special Controls) or class III (PMA), it may be subject to additional controls. Existing major regulations affecting your device can be found in the Code of Federal Regulations, Title 21, Parts 800 to 898. In addition, FDA may publish further announcements concerning your device in the Federal Register.

Please be advised that FDA's issuance of a substantial equivalence determination does not mean that FDA has made a determination that your device complies with other requirements of the Act or any Federal statutes and regulations administered by other Federal agencies.

You must comply with all the Act's requirements, including, but not limited to: registration and listing (21 CFR Part 807); labeling (21 CFR Part 801); medical device reporting (reporting of medical device-related adverse events) (21 CFR 803) for devices or postmarketing safety reporting (21 CFR 4, Subpart B) for combination products (see https://www.fda.gov/CombinationProducts/GuidanceRegulatoryInformation/ucm597488.htm); good manufacturing practice requirements as set forth in the quality systems (QS) regulation (21 CFR Part 820) for devices or current good manufacturing practices (21 CFR 4, Subpart A) for combination products; and, if applicable, the electronic product radiation control provisions (Sections 531-542 of the Act); 21 CFR 1000-1050.

Also, please note the regulation entitled, "Misbranding by reference to premarket notification" (21 CFR Part 807.97). For questions regarding the reporting of adverse events under the MDR regulation (21 CFR Part 803), please go to http://www.fda.gov/MedicalDevices/Safety/ReportaProblem/default.htm.

For comprehensive regulatory information about medical devices and radiation-emitting products, including information about labeling regulations, please see Device Advice (https://www.fda.gov/MedicalDevices/DeviceRegulationandGuidance/) and CDRH Learn (http://www.fda.gov/Training/CDRHLearn). Additionally, you may contact the Division of Industry and Consumer Education (DICE) to ask a question about a specific regulatory topic. See the DICE website (http://www.fda.gov/DICE) for more information or contact DICE by email (DICE@fda.hhs.gov) or phone (1-800-638-2041 or 301-796-7100).

Sincerely,

Angel A. Soler-
garcia -S

for
Benjamin R. Fisher, Ph.D.
Director
Division of Reproductive, Gastro-Renal,
and Urological Devices
Office of Device Evaluation
Center for Devices and Radiological Health

Enclosure

DEPARTMENT OF HEALTH AND HUMAN SERVICES
Food and Drug Administration

Indications for Use

Form Approved: OMB No. 0910-0120
Expiration Date: 06/30/2020
See PRA Statement below.

510(k) Number *(if known)*

K182511

Device Name
SimplCath

Indications for Use *(Describe)*

The SimplCath™, Female Urethra Catheterization-Assisting Device, is intended for urological use only. It is designed for use by healthcare personnel for catheterization of the female bladder. The device is to be inserted into the vagina before catheterization of the urethra.

Type of Use *(Select one or both, as applicable)*

☒ Prescription Use (Part 21 CFR 801 Subpart D) ☐ Over-The-Counter Use (21 CFR 801 Subpart C)

CONTINUE ON A SEPARATE PAGE IF NEEDED.

This section applies only to requirements of the Paperwork Reduction Act of 1995.

DO NOT SEND YOUR COMPLETED FORM TO THE PRA STAFF EMAIL ADDRESS BELOW.

The burden time for this collection of information is estimated to average 79 hours per response, including the time to review instructions, search existing data sources, gather and maintain the data needed and complete and review the collection of information. Send comments regarding this burden estimate or any other aspect of this information collection, including suggestions for reducing this burden, to:

Department of Health and Human Services
Food and Drug Administration
Office of Chief Information Officer
Paperwork Reduction Act (PRA) Staff
PRAStaff@fda.hhs.gov

"An agency may not conduct or sponsor, and a person is not required to respond to, a collection of information unless it displays a currently valid OMB number."

Section 5: 510(k) Summary or 510(k) Statement

This section contains a 510(k) Summary for this submission.

Contact Details

Applicant Name:	F&S Medical Solutions, LLC 10221 Woodridge Lane Omaha NE, 68124
Contact Name:	Dr. Sonia M. Rocha-Sanchez fsmedicalsolutions@gmail.com
Date Prepared:	September 10, 2018

Device Name

Trade Name:	SimplCath
Common Name:	Female catheter guide
Classification Name:	876.5130 Urological catheter and accessories (GBM)
Classification:	Class II
Classification Panel:	Gastroenterology/Urology

Legally Marketed Predicate Device

510(k)	Product Code	Trade Name	Applicant
K961361	GBM	Asta-Cath	A+ Medical Products, Inc. 16 Alden Place Newton, MA 02165

Device Description

SimplCath, the Female Urethra Catheterization-Assisting Device, is made of MD-105, a biocompatible thermoplastic elastomer. It has a mushroom shape and is intended to be inserted into the vagina for facilitating catheterization of the female urethra. It does so by: 1) retracting the vulvar labia, 2) blocking the vaginal entrance to prevent catheter contamination, and 3) providing a guide or landmark for the female urethral opening. SimplCath is compatible with all catheter sizes.

SimplCath is provided in boxes of 25 or 50 individually sealed, sterile units.

In use, the SimplCath inserts into the vagina, blocking the vaginal opening, spreading the labia, and exposing the female urethra, which falls into the top groove, and guides catheter placement.

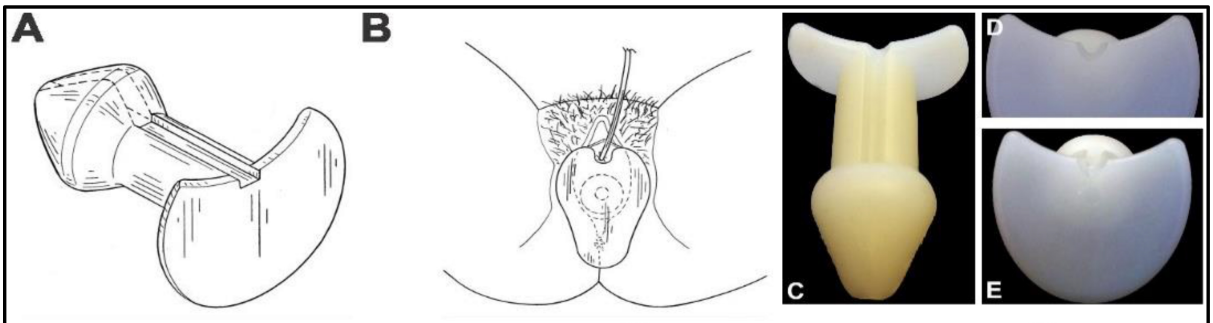

Fig. 1. A. *Schematic representation of SimplCath™.* ***B****. Upon insertion, SimplCath™ blocks the vaginal opening, opens the labia, exposes the female urethra, which falls into the top groove, therefore guiding catheter placement.* ***C-E.*** *SimplCath™ prototype.*

The design makes it especially useful for (1) medical personnel performing female catheterization in inpatient and outpatient settings, (2) training medical personnel and caregivers to catheterize female patients.

Additionally, SimplCath:

a) Fits all catheter sizes, making it suitable to be used in both intermittent and indwelling catheterization;
b) Can be introduced with the use of a single hand and stays in place, freeing both hands to help with other tasks, including catheter insertion;
c) Exposes the urethra, preventing vaginal contamination of the catheter and improving catheterization accuracy.
d) Allows the urethra to fall into the top groove of the device, therefore guiding the catheter to the urethra entrance, even when the urethra is not visible (e.g., retracted urethra).

A dimensioned, toleranced CAD drawing is shown below:

SimplCath
510(k) Notification

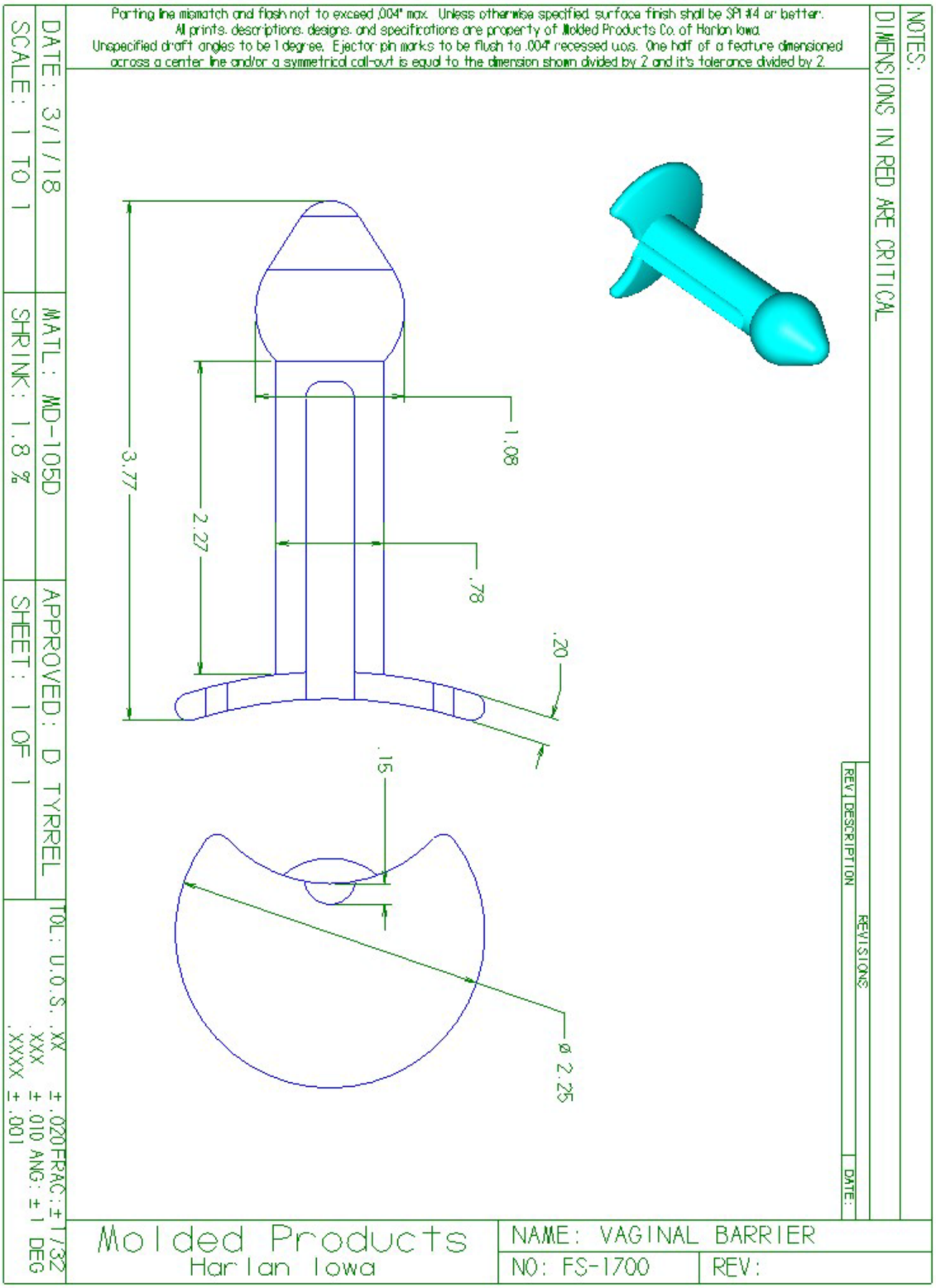

Intended Use/Indications for use

The SimplCath™, Female Urethra Catheterization-Assisting Device, is intended for urological use only. It is designed for use by healthcare personnel for catheterization of the female bladder. The device is to be inserted into the vagina before catheterization of the urethra.

Substantial Equivalence Comparison

SimplCath is substantially equivalent to Asta-Cath from A+ Medical Products, Inc. based upon regulatory parameters, intended use, device features, and use parameters. The detailed comparison of these products is given in this section with explanations of the similarities and differences described.

I. Regulatory Comparison

Table 5-1: Comparison of Regulatory Parameters

Category	SimplCath	Asta-Cath K961361
Indications for Use	The SimplCath™, Female Urethra Catheterization-Assisting Device, is intended for urological use only. It is designed for use by healthcare personnel for catheterization of the female bladder. The device is to be inserted into the vagina before catheterization of the urethra.	The Asta-Cath female catheter guide is intended for use in the following situations: (i) As an assistive device for women who have difficulty performing intermittent self catheterization due to motor or visual disabilities; (ii) As a teaching aide for women learning to catheterize themselves for the first time; (iii) As a teaching aide for caregivers who will be catheterizing women; (iv) As an assistive device and teaching aide for women who are required to perform intermittent self catheterization temporarily following surgery.

Common or usual name	Female catheter guide	Female catheter guide
Classification name	Urological catheter and accessories	Urological catheter and accessories
Product Code	GBM	GBM
Classification	Class II	Class II

Discussion of Similarities and Differences
The two products are identical in regulatory parameters. Both are urological catheter accessories. They have the same product code (GBM) and the same classification (Class II).

The two products have different language in their indications for use statements corresponding to the difference between use by a health care professional and by the layperson, but both are nonetheless assistive devices for female catheterization.

II. Device Features Comparison

Table 5-2: Comparison of Device Features

Category	SimplCath	Asta-Cath K961361
Homogenous single piece of molded plastic	Yes	Yes
Inserted into vaginal opening	Yes	Yes
Aligns catheter with urinary meatus	Yes	Yes
Remains in place during catheter use	Yes	Yes
Functions with variety of catheter sizes	Yes	Yes
Can be used with lubricants	Yes	Yes
Not made of natural rubber latex	Yes	Yes
Provided sterile	Yes	No
Intended for reprocessing and re-use	No	Yes

Discussion of Similarities and Differences

The two products are very similar. Both are inserted into the vaginal opening during use. Both have physical features to align a catheter with the urinary meatus. Both remain in place during catheter use. Both function with a variety of catheter sizes. Both can be used with lubricants, and are not made of natural rubber latex.

The two products differ in a few ways. The SimplCath is provided sterile and is intended for single use, whereas the Asta-Cath is non-sterile, and intended for reprocessing and re-use.

Taken individually and together, these differences do not affect the substantial equivalence; both products are still using the same technological basis. These differences do not introduce any new concerns regarding safety or efficacy.

III. Use Parameters Comparison

Table 5-3: Comparison of Use Parameters

Category	SimplCath	Asta-Cath K961361
Intended use environment	Health care environment	Home use
Intended user	Health care professional	Female layperson
Intended patient population	Adults	Adults

Discussion of Similarities and Differences

Both products are intended for use on adult females. The SimplCath is intended for use by medical professionals in a health care environment, whereas the Asta-Cath is intended for home use.

V. Comparative Performance Evaluations

Package integrity and biocompatibility testing were performed on finished product.

V. Clinical Performance Evaluations

Clinical performance evaluations are not necessary to demonstrate substantial equivalence to the predicate device.

VI. Conclusion

The two devices have substantially equivalent intended use and the same classification. They have many of the same features. They are used on the same populations. The two products are different in minor ways that do not materially affect their technological basis or use.

Package integrity and biocompatibility testing results support substantial equivalence.

SimplCath is substantially equivalent to Asta-Cath from A+ Medical Products, Inc. in intended use, device features, and use parameters.