STARCLOSE™

STARCLOSE™ VASCULAR CLOSURE SYSTEM

INSTRUCTIONS FOR USE

Rx ONLY

TO ENSURE PROPER DEPLOYMENT AND USE OF THIS DEVICE AND TO PREVENT INJURY TO PATIENTS, READ ALL INFORMATION CONTAINED IN THESE INSTRUCTIONS FOR USE.

The current FDA approved Instructions for Use (IFU) is available in Adobe Portable Document Format (pdf) on the World Wide Web (Internet) at: www.abbottvascular.com/ifu

It is recommended that product IFU be downloaded, printed, reviewed, and readily available for operator reference during procedures when using the device.

Note: IFU may be revised from time to time, so please refer to the website above for the most current version at the time of the procedure.

If you have difficulties accessing this document or would like to request a paper copy at no extra cost, please contact: Abbott Vascular Customer Service at 1-800-227-9902.

CAUTION

Federal law restricts this device to sale by or on the order of a physician (or allied healthcare professionals, authorized by, or under the direction of, such physicians) who are trained in diagnostic and therapeutic catheterization procedures and who have been trained by an authorized representative of Abbott Vascular.

Prior to use, the operator must review the Instructions for Use and be familiar with the deployment techniques associated with the use of this device.

DEVICE DESCRIPTION

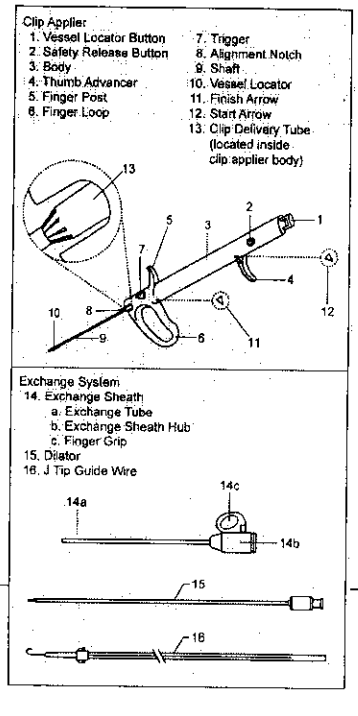

The StarClose Vascular Closure System is designed to deliver a nitinol clip to close femoral artery access sites following percutaneous catheterization procedures.

The StarClose Vascular Closure System consists of the StarClose Clip Applier and a 6F Exchange System **(see Figure 1)**. The StarClose Vascular Closure System can also be used with the StarClose 6F Introducer Set, which is packaged and sold separately **(see Figure 1a)**. An implantable Clip is mounted on the Clip Applier, which delivers the Clip through the Exchange Sheath or Introducer Sheath for extravascular closure of access sites. The StarClose Vascular Closure System, the Clip Applier and the Introducer Set may be purchased separately.

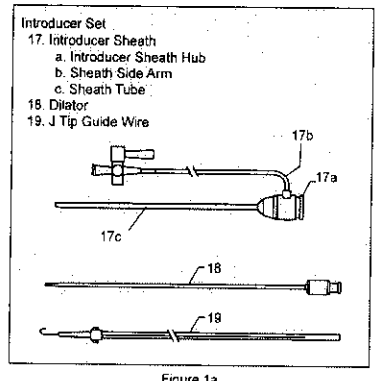

Figure 1a
StarClose Introducer Set - sold separately

INDICATIONS FOR USE

The StarClose Vascular Closure System is indicated for the percutaneous closure of common femoral artery access sites while reducing times to hemostasis and ambulation, in patients who have undergone diagnostic or interventional endovascular catheterization procedures utilizing a 5F or 6F procedural sheath.

The StarClose Vascular Closure System is indicated for the percutaneous closure of common femoral artery access sites while reducing time to dischargeability in patients who have undergone diagnostic endovascular catheterization procedures utilizing a 5F or 6F procedural sheath.

CONTRAINDICATIONS

There are no contraindications to the use of this device. Attention is drawn to the warnings, precautions and special patient populations.

WARNINGS

Do not use the StarClose Vascular Closure System if the packaging or sterile barrier has been previously opened or damaged or if the components appear to be damaged or defective.

DO NOT RESTERILIZE OR REUSE. The StarClose Vascular Closure System and accessories are intended for single use only.

Do not use the StarClose Vascular Closure System if the sterile field has been broken where bacterial contamination of the sheath or surrounding tissues may have occurred, since such a broken sterile field may result in infection.

Do not use the StarClose Vascular Closure System if the puncture site is located above the most inferior border of the inferior epigastric artery (IEA) and/or above the inguinal ligament based upon bony landmarks, since such a puncture site may result in a retroperitoneal hematoma. Perform a femoral angiogram to verify the location of the puncture site.

Do not use the StarClose Vascular Closure System if the puncture is through the posterior wall or if there are multiple punctures, since such punctures may result in a retroperitoneal hematoma.

Do not use the StarClose Vascular Closure System if the puncture site is located in the superficial femoral artery or the profunda femoris artery, since such puncture sites may result in a

pseudoaneurysm, intimal dissection, or an acute vessel closure (thrombosis of small artery lumen). Perform a femoral angiogram to verify the location of the puncture site.

PRECAUTIONS

1. The StarClose Vascular Closure System should be used only by operators trained in diagnostic and interventional catheterization procedures who have been certified by an authorized representative of Abbott Vascular Devices.
2. The StarClose Vascular Closure System is provided sterile and non-pyrogenic in unopened undamaged packaging. Products are sterilized with ethylene oxide and intended for single use only. Do not resterilize. Store in a cool, dry place.
3. Prior to use, inspect the StarClose Vascular Closure System to ensure that the sterile packaging has not been damaged during shipment. Examine all components prior to use to verify proper function. Exercise care during device handling to reduce the possibility of accidental device breakage.
4. As with catheter-based procedures, infection is a possibility. Observe sterile technique at all times when using the StarClose Vascular Closure System. Employ appropriate groin management post procedure and post hospital discharge to prevent infection.
5. Use a single wall puncture technique. Do not puncture the posterior wall of the artery.
6. Do not use the StarClose Vascular Closure System to close vessels with diameters less than 5 mm.
7. Do not deploy the Clip in areas of calcified plaque.
8. The StarClose Vascular Closure System can be used **ONLY** with the StarClose Exchange System (included in the StarClose Vascular Closure System packaging), or the StarClose 6F Introducer Set, sold separately (see the StarClose Introducer Set Instructions for Use).
9. **Do not advance the StarClose Vascular Closure Device against resistance until the cause of that resistance has been determined.** Excessive force used to advance or torque the StarClose device should be avoided, as this may lead to significant vessel damage and/or breakage of the device, which may necessitate interventional and/or surgical removal of the device and vessel repair.

SPECIAL PATIENT POPULATIONS

The safety and effectiveness of the StarClose Vascular Closure System have not been established in the following patient populations:

- Patients with introducer sheaths < 5F or > 6F during the catheterization procedure.
- Patients with ipsilateral arterial access sites punctured and compressed within 3 months before the catheterization procedure.
- Patients with access sites in the profunda femoris or superficial femoral arteries.
- Patients with access sites distal to the bifurcation of the superficial femoral and profunda femoris arteries.
- Patients having a hematoma, pseudoaneurysm, or arteriovenous fistula present prior to sheath removal.
- Patients with femoral artery calcium, which is fluoroscopically visible at access site.
- Patients with small femoral arteries (< 5 mm in diameter).
- Patients with severe claudication, iliac or femoral artery diameter stenosis greater than 50%, or previous bypass surgery or stent placement in the vicinity of access site.
- Patients with access sites in vascular grafts.
- Patients with prior intra-aortic balloon pump at access site.
- Patients with ipsilateral femoral venous sheath during the catheterization procedure.
- Patients with which there is difficulty inserting the introducer sheath or greater than 2 ipsilateral arterial punctures at the start of the catheterization procedure.
- Patients with intra-procedural bleeding around access site.

- Patients younger than 18 years of age.
- Patients who are pregnant or lactating.
- Patients with bleeding diathesis or coagulopathy.
- Patients who are morbidly obese (Body Mass Index > 35 kg/m^2).
- Patients with hypertension (systolic BP > 180 mm Hg or diastolic BP > 110 mm Hg) unresponsive to medical therapy.
- Patients with active systemic or cutaneous infection or inflammation.
- Patients with access sites above the most inferior border of the inferior epigastric artery (IEA) and/or above the inguinal ligament based upon bony landmarks.

ADDITIONAL CONSIDERATION

The StarClose Clip, when used in the MRI environment, has been demonstrated to present no additional risk to the patient or other individuals, but may affect the quality of the diagnostic information. Safety testing was conducted on 3-Tesla equipment.

ADVERSE EVENTS

The use of the StarClose Vascular Closure System in diagnostic and interventional catheterization patients was evaluated in a pivotal, prospective, multi-center, open-label, randomized clinical study involving 208 diagnostic patients and 275 interventional patients (483 total randomized patients) enrolled at 17 United States clinical centers. The first randomized patient was enrolled on 3/15/04.

Enrollment in the diagnostic arm of the study was completed on 9/15/04. In the diagnostic arm the StarClose device was compared to standard compression (SC) methods following cardiac and peripheral vascular catheterization procedures utilizing 5F and 6F sheath sizes. The diagnostic patients were randomized using a 2:1 scheme (StarClose device vs. SC control). Of the 208 diagnostic patients, 136 patients (65.4%) were randomized to the StarClose device and 72 patients (34.6%) were randomized to SC. All primary analyses comparing the 2 randomized groups were based on an intent-to-treat (ITT) analysis in which patients were assigned to the treatment group to which they were randomized.

The numbers and percentages of major and minor complications for the diagnostic patients in the clinical study are shown in Table 1.

Table 1: Major and Minor Complications Through 30 Days – Diagnostic ITT Patients

Description of Event	CLIP Device (N=136)	Standard Compression (N=72)	All Patients (N=208)	Difference [95% C.I.]	P-value
Major Vascular Complications (Combined)	0.0% (0/136)	0.0% (0/72)	0.0% (0/208)	0.0% [--,--]	--
Vascular Injury Requiring Repair	0.0% (0/136)	0.0% (0/72)	0.0% (0/208)	0.0% [--,--]	--
Surgery	0.0% (0/136)	0.0% (0/72)	0.0% (0/208)	0.0% [--,--]	--
Angioplasty	0.0% (0/136)	0.0% (0/72)	0.0% (0/208)	0.0% [--,--]	--
Ultrasound Guided Compression	0.0% (0/136)	0.0% (0/72)	0.0% (0/208)	0.0% [--,--]	--
Thrombin injection or Other Percutaneous Procedure	0.0% (0/136)	0.0% (0/72)	0.0% (0/208)	0.0% [--,--]	--
New Ipsilateral Lower Extremity Ischemia	0.0% (0/136)	0.0% (0/72)	0.0% (0/208)	0.0% [--,--]	--
Access Site-related Bleeding Requiring Transfusion	0.0% (0/136)	0.0% (0/72)	0.0% (0/208)	0.0% [--,--]	--
Access Site-related Infection Requiring Intravenous Antibiotics or Prolonged Hospitalization	0.0% (0/136)	0.0% (0/72)	0.0% (0/208)	0.0% [--,--]	--
Access Site-related Nerve Injury Requiring Intervention	0.0% (0/136)	0.0% (0/72)	0.0% (0/208)	0.0% [--,--]	--
Complications					
Death	0.0% (0/136)	0.0% (0/72)	0.0% (0/208)	0.0% [--,--]	--
Minor Vascular Complications (Combined)	2.2% (3/136)	1.4% (1/72)	1.9% (4/208)	0.8% [-2.8%,4.5%]	1.000
Pseudoaneurysm	0.0% (0/136)	0.0% (0/72)	0.0% (0/208)	0.0% [--,--]	--
Arteriovenous Fistula	0.0% (0/136)	0.0% (0/72)	0.0% (0/208)	0.0% [--,--]	--
Hematoma (≥6 cm)	0.7% (1/136)	1.4% (1/72)	1.0% (2/208)	-0.7% [-3.7%,2.4%]	1.000
Late access site-related bleeding	0.0% (0/136)	0.0% (0/72)	0.0% (0/208)	0.0% [--,--]	--
Transient lower extremity ischemia	0.0% (0/136)	0.0% (0/72)	0.0% (0/208)	0.0% [--,--]	--
Ipsilateral deep vein thrombosis	0.0% (0/136)	0.0% (0/72)	0.0% (0/208)	0.0% [--,--]	--
Transient access site-related nerve injury	1.5% (2/136)	0.0% (0/72)	1.0% (2/208)	1.5% [-0.6%,3.5%]	0.545
Access site-related vessel injury	0.0% (0/136)	0.0% (0/72)	0.0% (0/208)	0.0% [--,--]	--
Access site wound dehiscence	0.0% (0/136)	0.0% (0/72)	0.0% (0/208)	0.0% [--,--]	--
Access site-related bleeding requiring >=30 minutes to re-achieve hemostasis	0.0% (0/136)	0.0% (0/72)	0.0% (0/208)	0.0% [--,--]	--
Localized access site infection treated with IM or oral antibiotics	0.0% (0/136)	0.0% (0/72)	0.0% (0/208)	0.0% [--,--]	--
UADE	0.0% (0/136)	0.0% (0/72)	0.0% (0/208)	0.0% [--,--]	--

Numbers are % (events/sample size).
Minor vascular complications include only patients who did not have a major vascular complication.

Enrollment in the interventional arm of the study was completed on 11/11/04. In the interventional arm the StarClose device was compared to standard compression (SC) methods following cardiac and peripheral vascular catheterization procedures utilizing 5F and 6F sheath sizes. The interventional patients were randomized using a 2:1 scheme (StarClose device vs. SC control). Of the 275 interventional patients, 184 patients (66.9%) were randomized to the StarClose device and 91 patients (33.1%) were randomized to SC. A subset of 86 patients in the interventional arm received GP IIb/IIIa inhibitors. Of this subset, 56 patients (65.1%) were randomized to the StarClose device and 30 patients (34.9%) were randomized to SC. All primary analyses comparing the 2 randomized groups were based on an intent-to-treat (ITT) analysis in which patients were assigned to the treatment group to which they were randomized.

A total of 275 subjects were included in the interventional arm. The 30-day safety and effectiveness results for the interventional subjects assigned to the StarClose VCS compared favorably to the control group. For all subjects within each treatment group, the major vascular complications rate was 2/184 (1.1%) for the StarClose VCS group and 1/91 (1.1%) for the control group (p=1.000). The total number of major events in the StarClose group was 3 due to 1 subject who had 2 major vascular complications.

The numbers and percentages of major and minor complications for the interventional patients in the clinical study are shown in Table 2 (all) and Table 3 (with GP IIb/IIIa).

Table 2: Major and Minor Complications Through 30 Days – Interventional ITT Patients(Subject based)

Description of Event	CLIP Device (N=184)	Standard Compression (N=91)	All Patients (N=275)	Difference [95% C.I.]	P-value
Major Vascular Complications (Composite)	1.1% (2/184)	1.1% (1/91)	1.1% (3/275)	-0.0% [-4.9%, 2.9%]	1.000
Vascular Injury Requiring Repair	0.5% (1/184)	0.0% (0/91)	0.4% (1/275)	0.5% [-3.5%, 3.0%]	1.000
Surgery*	0.5% (1/184)	0.0% (0/91)	0.4% (1/275)	0.5% [-3.5%, 3.0%]	1.000
Angioplasty	0.0% (0/184)	0.0% (0/91)	0.0% (0/275)	0.0% [-4.1%, 2.0%]	--
Other Percutaneous Procedure	0.0% (0/184)	0.0% (0/91)	0.0% (0/275)	0.0% [-4.1%, 2.0%]	--
Ultrasound Compression	0.0% (0/184)	0.0% (0/91)	0.0% (0/275)	0.0% [-4.1%, 2.0%]	--
New Ipsilateral Lower Extremity Ischemia	0.0% (0/184)	0.0% (0/91)	0.0% (0/275)	0.0% [-4.1%, 2.0%]	--
Access Site-related Bleeding Requiring Transfusion*/**/***	1.1% (2/184)	1.1% (1/91)	1.1% (3/275)	-0.0% [-4.9%, 2.9%]	1.000
Antibiotics or Prolonged Hospitalization	0.0% (0/184)	0.0% (0/91)	0.0% (0/275)	0.0% [-4.1%, 2.0%]	--
Access Site-related Nerve Injury Requiring Intervention	0.0% (0/184)	0.0% (0/91)	0.0% (0/275)	0.0% [-4.1%, 2.0%]	--
Complications					
Death	0.0% (0/184)	0.0% (0/91)	0.0% (0/275)	0.0% [-4.1%, 2.0%]	--
Minor Vascular Complications (Composite)	4.3% (8/184)	9.9% (9/91)	6.2% (17/275)	-5.5% [-13.7%, 0.6%]	0.107
Pseudoaneurysm**	0.0% (0/184)	1.1% (1/91)	0.4% (1/275)	-1.1% [-6.0%, 1.1%]	0.331
Arteriovenous Fistula	0.0% (0/184)	0.0% (0/91)	0.0% (0/275)	0.0% [-4.1%, 2.0%]	--
Hematoma (>=6 cm)***	4.3% (8/184)	7.7% (7/91)	5.5% (15/275)	-3.3% [-11.0%, 2.3%]	0.268
Late access site-related bleeding	0.0% (0/184)	0.0% (0/91)	0.0% (0/275)	0.0% [-4.1%, 2.0%]	--
Transient lower extremity ischemia	0.0% (0/184)	0.0% (0/91)	0.0% (0/275)	0.0% [-4.1%, 2.0%]	--
Ipsilateral deep vein thrombosis	0.0% (0/184)	0.0% (0/91)	0.0% (0/275)	0.0% [-4.1%, 2.0%]	--
Access site-related nerve injury w/o intervention	0.0% (0/184)	1.1% (1/91)	0.4% (1/275)	-1.1% [-6.0%, 1.1%]	0.331
Access site-related vessel injury	0.0% (0/184)	0.0% (0/91)	0.0% (0/275)	0.0% [-4.1%, 2.0%]	--
Access site wound dehiscence	0.0% (0/184)	0.0% (0/91)	0.0% (0/275)	0.0% [-4.1%, 2.0%]	--
Ultrasound guided Thrombin Injection**/****	0.0% (0/184)	1.1% (1/91)	0.4% (1/275)	-1.1% [-6.0%, 1.1%]	0.331
Re-bleeding at time of first ambulation, req ≥ 30 min. for re-hemostasis	0.0% (0/184)	0.0% (0/91)	0.0% (0/275)	0.0% [-4.1%, 2.0%]	--
Localized access site infection treated with IM or oral antibiotics	0.0% (0/184)	0.0% (0/91)	0.0% (0/275)	0.0% [-4.1%, 2.0%]	--
UADE	0.0% (0/184)	0.0% (0/91)	0.0% (0/275)	0.0% [-4.1%, 2.0%]	--

mace_by_pt.sas 31AUG05

95% Confidence Interval of difference 0.0% was provided using Newcombe approach.

P-value was provided using Fisher's Exact Test.

*Subject 16-301 had 2 major vascular events (Surgery and Access site-related bleeding requiring transfusion) and 1 minor vascular event (Hematoma >=6cm).

**Subject 01-329 had 1 major vascular event (Access site-related bleeding requiring transfusion) and 3 minor vascular events (Pseudoaneurysm and 2 occurrences of Ultrasound Compression or Thrombin injection).

***Subject 03-313 had 1 major vascular event (Access site-related bleeding requiring transfusion) and 1 minor vascular event (Hematoma >=6cm)

****The protocol states ultrasound compression and thrombin injection were classified as major vascular complications, however, ultrasound guided thrombin injection has been reclassified as minor vascular complication per the FDA.

This interventional arm was further categorized into 86 subjects receiving glycoprotein (GP) IIb/IIIa inhibitors and 189 subjects not receiving GP IIb/IIIa inhibitors during their procedures. For the group of subjects in whom GP IIb/IIIa inhibitors was administered, the major and minor vascular complication rates were 3.6% (3/56) and 8.9% (5/56), respectively, for subjects receiving StarClose, and 0.0% (0/30) and 13.3% (4/30), respectively, for control subjects. The differences between the treatment arms were non-significant with p=0.540 for the major vascular complication rate and p=0.713 for the minor vascular complication rate.

Table 3: Major and Minor Complications Through 30 Days – Interventional ITT Patients Receiving Glycoprotein IIb/IIIa Inhibitors

Description of Event	StarClose (N=56)	Standard Compression (N=30)	All Subjects (N=86)	Difference [95% C.I.]	P-value
Major Vascular Complications (Composite)	3.6% (2/56)	0.0% (0/30)	2.3% (2/86)	3.6% [-8.1%,12.1%]	0.540
Vascular Injury Requiring Repair	1.8% (1/56)	0.0% (0/30)	1.2% (1/86)	1.8% [-9.7%,9.4%]	1.000
Surgery*	1.8% (1/56)	0.0% (0/30)	1.2% (1/86)	1.8% [-9.7%,9.4%]	1.000
Angioplasty	0.0% (0/56)	0.0% (0/30)	0.0% (0/86)	0.0% [-11.4%,6.4%]	--
Other Percutaneous Procedure	0.0% (0/56)	0.0% (0/30)	0.0% (0/86)	0.0% [-11.4%,6.4%]	--
New Ipsilateral Lower Extremity Ischemia	0.0% (0/56)	0.0% (0/30)	0.0% (0/86)	0.0% [-11.4%,6.4%]	--
Access Site related Bleeding Requiring Transfusion*/**	3.6% (2/56)	0.0% (0/30)	2.3% (2/86)	3.6% [-8.1%,12.1%]	0.540
Antibiotics or Prolonged Hospitalization	0.0% (0/56)	0.0% (0/30)	0.0% (0/86)	0.0% [-11.4%,6.4%]	--
Access Site-related Nerve Injury Requiring Intervention	0.0% (0/56)	0.0% (0/30)	0.0% (0/86)	0.0% [-11.4%,6.4%]	--
Complications					
Death	0.0% (0/56)	0.0% (0/30)	0.0% (0/86)	0.0% [-11.4%,6.4%]	--
Minor Vascular Complications (Composite)	8.9% (5/56)	13.3% (4/30)	10.5% (9/86)	-4.4% [-18.7%,9.9%]	0.713
Pseudoaneurysm	0.0% (0/56)	0.0% (0/30)	0.0% (0/86)	0.0% [-11.4%,6.4%]	--
Arteriovenous Fistula	0.0% (0/56)	0.0% (0/30)	0.0% (0/86)	0.0% [-11.4%,6.4%]	--
Hematoma (>=6 cm)*/**	8.9% (5/56)	13.3% (4/30)	10.5% (9/86)	-4.4% [-18.7%,9.9%]	0.713
Late access site-related bleeding	0.0% (0/56)	0.0% (0/30)	0.0% (0/86)	0.0% [-11.4%,6.4%]	--
Transient lower extremity ischemia	0.0% (0/56)	0.0% (0/30)	0.0% (0/86)	0.0% [-11.4%,6.4%]	--
Ipsilateral deep vein thrombosis	0.0% (0/56)	0.0% (0/30)	0.0% (0/86)	0.0% [-11.4%,6.4%]	--
Access site-related nerve injury w/o intervention	0.0% (0/56)	0.0% (0/30)	0.0% (0/86)	0.0% [-11.4%,6.4%]	--
Access site-related vessel injury	0.0% (0/56)	0.0% (0/30)	0.0% (0/86)	0.0% [-11.4%,6.4%]	--
Access site wound dehiscence	0.0% (0/56)	0.0% (0/30)	0.0% (0/86)	0.0% [-11.4%,6.4%]	--
Ultrasound Compression or Thrombin Injection***	0.0% (0/56)	0.0% (0/30)	0.0% (0/86)	0.0% [-11.4%,6.4%]	
Re-bleeding at time of first ambulation,req.>30 min. for re-hemostasis	0.0% (0/56)	0.0% (0/30)	0.0% (0/86)	0.0% [-11.4%,6.4%]	--
Localized access site infection treated with IM or oral antibiotics	0.0% (0/56)	0.0% (0/30)	0.0% (0/86)	0.0% [-11.4%,6.4%]	--
UADE	0.0% (0/56)	0.0% (0/30)	0.0% (0/86)	0.0% [-11.4%,6.4%]	--

Numbers are % (events/sample size).

95% Confidence Interval of difference 0.0% was provided using Newcombe approach.

P-value was provided using Fisher's Exact Test.

*One StarClose subject 16-301 had 2 major vascular events (Surgery and Access site-related bleeding requiring transfusion) and 1 minor vascular event (Hematoma >=6cm).

**One StarClose subject 03-313 had 1 major vascular event (Access site-related bleeding requiring transfusion) and 1 minor vascular event (Hematoma >=6cm)/

***The protocol states ultrasound compression and thrombin injection were classified as major vascular complications, however, these have since been reclassified as minor vascular complications per the FDA.

CLINICAL STUDY

The use of the StarClose Vascular Closure System in diagnostic and interventional catheterization patients was evaluated in a pivotal, prospective, multi-center, open-label, randomized clinical study involving 208 diagnostic patients and 275 interventional patients (483 total randomized patients) enrolled at 17 United States clinical centers. The first randomized patient was enrolled on 3/15/04.

Enrollment in the diagnostic arm of the study was completed on 9/15/04. In the diagnostic arm the StarClose device was compared to standard compression (SC) methods following cardiac and peripheral vascular catheterization procedures utilizing 5F and 6F sheath sizes. The diagnostic patients were randomized using a 2:1 scheme (StarClose device vs. SC control). Of the 208 diagnostic patients, 136 patients (65.4%) were randomized to the StarClose device and 72 patients (34.6%) were randomized to SC. All primary analyses comparing the 2 randomized groups were

based on an intent-to-treat (ITT) analysis in which patients were assigned to the treatment group to which they were randomized.

Enrollment in the interventional arm of the study was completed on 11/11/04. In the interventional arm the StarClose device was compared to standard compression (SC) methods following cardiac and peripheral vascular catheterization procedures utilizing 5F and 6F sheath sizes. The interventional patients were randomized using a 2:1 scheme (StarClose device vs. SC control). Of the 275 interventional patients, 184 patients (66.9%) were randomized to the StarClose device and 91 patients (33.1%) were randomized to SC. A subset of 86 patients in the interventional arm received GP IIb/IIIa inhibitors. Of this subset, 56 patients (65.1%) were randomized to the StarClose device and 30 patients (34.9%) were randomized to SC. All primary analyses comparing the 2 randomized groups were based on an intent-to-treat (ITT) analysis in which patients were assigned to the treatment group to which they were randomized.

The randomized diagnostic and interventional patients in the study had to meet general inclusion criteria, general exclusion criteria, access site exclusion criteria (including some criteria evaluated via limited femoral artery angiogram), and procedural exclusion criteria. The diagnostic patients consisted of 68.4% men ranging in age from 34 to 83 years and 31.6% women ranging in age from 36 to 80 years. The interventional patients consisted of 80.4% men and ranged in age from 39 to 81. The diagnostic patients who were randomized to the StarClose device were asked to ambulate 2 hours after the diagnostic procedure was complete, and the diagnostic patients who were randomized to SC were ambulated according to institutional standards and guidelines. The interventional patients who were randomized to the StarClose device were asked to ambulate 4 hours after the interventional procedure was complete, and the interventional patients who were randomized to SC were ambulated according to institutional standards and guidelines.

The primary safety endpoint for the study was the combined rate of major complications within 30 ± 7 days following the catheterization procedure. The secondary safety endpoint for the study was the combined rate of minor complications within 30 ± 7 days following the catheterization procedure. The null hypothesis for safety was that the StarClose Vascular Closure System had a primary safety endpoint rate exceeding that of the standard of care (standard compression) by delta. The alternative hypothesis was that the StarClose Vascular Closure System had a primary safety endpoint rate less than that of standard compression or exceeding that of standard compression by no more than delta; i.e.,

$$H_0: \pi_{IC} > \pi_{SC} + \delta$$
$$H_a: \pi_{IC} \leq \pi_{SC} + \delta$$

where π_{IC} was the primary endpoint rate estimated for the StarClose Vascular Closure System and π_{SC} was the primary endpoint rate estimated for the standard of care (standard compression).

For the diagnostic patients, the StarClose device demonstrated safety. By Day 30, a combined total of 0 (0.0%) major complications was reported for the randomized diagnostic patients who received the StarClose device, and a combined total of 0 (0.0%) major complications was reported for the randomized diagnostic patients who received SC.

For the interventional patients, the StarClose device also demonstrated safety. By Day 30, a combined total of 2 (1.1%) major complications was reported for the randomized interventional patients who received the StarClose device, and a combined total of 1 (1.1%) major complications was reported for the randomized interventional patients who received SC.

For the diagnostic patients, the rates of minor complications were low between the 2 randomized treatment groups. Of the 4 minor vascular complications noted, 3 occurred in the StarClose device group (one hematoma ≥ 6 cm and two transient access site-related nerve injuries) and one minor complication occurred in the control group (a hematoma ≥ 6 cm). The most common minor complication was transient access site-related nerve injury. The combined total rates of minor complications at Day 30 were 2.2% for the randomized diagnostic StarClose device patients and 1.4% for the randomized diagnostic SC patients.

For the interventional patients, the rates of minor complications were low between the 2 randomized treatment groups. Of the 17 minor vascular complications noted, 8 occurred in the StarClose device group and 9 minor complications occurred in the control. The combined total rates of minor

complications at Day 30 were 4.3% for the randomized interventionalStarClose device patients and 9.9% for the randomized interventionalSC patients.

The primary effectiveness endpoint for the diagnostic and interventional studies was time to hemostasis. For the diagnostic study, the secondary effectiveness endpoints were time to ambulation, time to eligibility for hospital discharge (time to dischargeability), procedure success at discharge, and device success. For the interventional study, the secondary effectiveness endpoints were time to ambulation, procedure success at discharge, and device success.

Time to hemostasis was defined as the elapsed time between sheath removal and first observed hemostasis.

Time to ambulation was defined as the elapsed time between sheath removal and the time when the patient stands and walks at least 20 feet without re-bleeding.

For the diagnostic study, time to dischargeability was defined as the elapsed time between sheath removal and the time when the patient is medically able to be discharged based solely on the assessment of the access site, as determined by the patient's physician (for diagnostic patients only).

Procedure success was defined as the attainment of final hemostasis using any method and freedom from major vascular complications.

Device success was defined as the attainment of final hemostasis using the StarClose Vascular Closure System alone or with adjunctive compression ≤ 5 minutes and freedom from major vascular complications.

The effectiveness results for the diagnostic patients in the clinical study are shown in Table 4, Table 5, and Table 6. The effectiveness results for the interventional patients in the clinical study are shown in Table 7, Table 8, and Table 9.

Table 4: Primary Effectiveness Endpoint – Diagnostic ITT Patients

Time to Hemostasis (Mins)	CLIP Device (N=136)	Standard Compression (N=72)	All Patients (N=208)	Difference [95% C.I.]	P-value***
Mean ± SD (N)*	1.46 ± 4.52 (135)**	15.47 ± 11.43 (72)	6.33 ± 10.15 (207)	-14.01 [-16.21, -11.81]	<0.001
Median	0.28	15.00	0.80		
Range (min, max)	(0.0, 42.4)	(0.0, 103.1)	(0.0, 103.1)		

* The mean Time to Hemostasis value includes 3 diagnostic patients (2/120, 4/102, 4/104) with reported times of '0' that were queried and confirmed by the investigator.
** One patient had missing Time (T5) Introducer Sheath removed.
*** Time to Hemostasis p-value was determined using two-sample t-test and Wilcoxon rank sum test.

Table 5: Secondary Effectiveness Endpoints – Diagnostic ITT Patients

Endpoint	CLIP Device (N=136)	Standard Compression (N=72)	All Patients (N=208)	Difference [95% C.I.]	P-value****
Procedure Success	100.0% (136/136)	100.0% (72/72)	100.0% (208/208)	0.0% [--, --]	--
Device Success*	94.1% (127/135)	N/A	N/A	N/A	N/A
Time to Ambulation (Mins)***					
Mean ± SD (N)	162.98 ± 104.60 (131)	269.27 ± 134.76 (70)	200.00 ± 126.31 (201)	-106.29 [-140.14, -72.43]	<0.001
Median	134.00	249.00	147.00		
Range (min, max)	(100.0, 1093.0)	(125.0, 1049.0)	(100.0, 1093.0)		
Time to Ambulation (Hours)***					
Mean ± SD (N)	2.72 ± 1.74 (131)	4.49 ± 2.25 (70)	3.33 ± 2.11 (201)	-1.77 [-2.34, -1.21]	--
Median	2.23	4.15	2.45		
Range (min, max)	(1.67, 18.22)	(2.08, 17.48)	(1.67, 18.22)		
Time to Dischargeability (Hours)**					
Mean ± SD (N)	3.53 ± 2.08 (135)	5.24 ± 2.12 (71)	4.12 ± 2.24 (206)	-1.70 [-2.31, -1.10]	<0.001
Median	3.08	4.85	3.33		
Range (min, max)	(1.9, 19.7)	(2.5, 15.9)	(1.9, 19.7)		

Numbers are % (counts/sample size) or Mean ± 1 Standard Deviation.
N/A = Not Applicable
* One patient had missing Time (T5) Introducer sheath removed.
** The Time to Dischargeability is calculated by subtracting IVC005, Q.1 (procedure date) and Q.11.7 (Time Introducer sheath removed) from CRF IVC012, Q.2.1 & 2.2 (Time Eligible for discharge). One patient had missing Time (T8) Eligible for Discharge. One patient had missing Time (T5) Introducer sheath removed.
*** The Time to Ambulation is calculated by subtracting IVC005, Q.1 (procedure date) and Q.11.7 (Time Introducer sheath removed) from CRF IVC011, Q.1.8 (Time first Ambulation). Six had missing Time (T7) of first ambulation (≥ 20 feet). One patient had missing Time (T5) Introducer sheath removed.
**** Time to Dischargeability and Time to Ambulation p-values were determined using two-sample t-test.

Table 6: Effectiveness Results by Post-Procedure Time Interval for Diagnostic ITT Patients

Percentage of Patients Achieving Hemostasis Within Time Interval		*≤ 5 min*	*≤ 10 min*	*≤ 15 min*	*≤ 30 min*	*≤ 60 min*	*≤ 120 min*
	CLIP Device	**94.07%** (127/135)	**97.04%** (131/135)	**98.52%** (133/135)	**99.26%** (134/135)	**100%** (135/135)	**100%** (135/135)
	Standard Comp	**5.56%** (4/72)	**9.72%** (7/72)	**36.11%** (26/72)	**97.22%** (70/72)	**98.61%** (71/72)	**100%** (72/72)
Percentage of Patients Ambulating Within Time Interval		*≤ 2 hrs*	*≤ 3 hrs*	*≤ 4 hrs*	*≤ 6 hrs*	*≤ 12 hrs*	*≤ 20 hrs*
	CLIP Device	**3.05%** (4/131)	**83.97%** (110/131)	**90.84%** (119/131)	**96.18%** (126/131)	**99.24%** (130/131)	**100%** (131/131)
	Standard Comp	**0%** (0/70)	**18.57%** (13/70)	**45.71%** (32/70)	**82.86%** (58/70)	**98.57%** (69/70)	**100%** (70/70)
Percentage of Patients Eligible for Discharge Within Time Interval		*≤ 2 hrs*	*≤ 3 hrs*	*≤ 4 hrs*	*≤ 6 hrs*	*≤ 12 hrs*	*≤ 20 hrs*
	CLIP Device	**1.48%** (2/135)	**35.56%** (48/135)	**82.96%** (112/135)	**94.81%** (128/135)	**98.52%** (133/135)	**100%** (135/135)
	Standard Comp	**0%** (0/71)	**7.04%** (5/71)	**25.35%** (18/71)	**70.42%** (50/71)	**98.59%** (70/71)	**100%** (71/71)

Table 7: Primary Effectiveness Endpoint – Interventional ITT Patients

Time to Hemostasis (Mins)	CLIP Device (N=184)	Standard Compression (N=91)	All Patients (N=275)	Difference [95% C.I.]	P-value***
Mean ± SD (N)	7.95 ± 28.22 (182)	29.06 ± 35.26 (74)	14.05 ± 31.83 (256)	-14.01 [-16.21, -11.81]	<0.001
Median	0.33	19.60	1.83		
Range (min, max)	(0.0, 184.2)	(0.0, 245.3)	(0.0, 245.3)		

Numbers are % (counts/sample size) or Mean ± 1 Standard Deviation.

Treatment group comparisons were performed using Fisher's Exact test for categorical variables. For continuous variables, the Shapiro-Wilk test was used to test normality of Time to Hemostasis and Time to Ambulation. The p-value from this test was <0.001, indicating non-normality and skewness of the data distribution. Therefore the Wilcoxon Rank Sum Test was used to calculate the p-value between the two groups.

Table 8: Secondary Effectiveness Endpoints – Interventional ITT Patients

Interventional	StarClose Device (N=184)	Standard Compression (N=91)	All Subjects (N=275)	Difference [95% C.I.]	P-value
Procedure Success*	98.9% (181/183)	98.7% (74/75)	98.8% (255/258)	0.2% [-2.8%, 3.2%]	1.000
Device Success**	86.8% (158/182)	N/A	N/A	N/A	N/A
Time to Hemostasis (Mins)***					
Mean±SD (N)	7.95±28.22 (182)	29.06±35.26 (74)	14.05±31.83 (256)	-21.11 [-29.37, -12.85]	<0.001
Range (min, max)	(0.0,184.2)	(0.0,245.3)	(0.0,245.3)		
Median	0.33	19.60	1.83		
Percentile (5%, 95%)	(0.03,27.92)	(13.47,79.67)	(0.03,66.42)		
Time to Ambulation (Mins)****					
Mean±SD (N)	406.99±282.61 (178)	466.02±257.23 (90)	426.82±275.29 (268)	-59.03 [-128.90,10.85]	<0.001
Range (min, max)	(129.0,1686.0)	(41.0,1310.0)	(41.0,1686.0)		
Median	278.50	389.00	305.00		
Percentile (5%, 95%)	(228.00,1075.00)	(235.00,1023.00)	(234.00,1050.00)		

Numbers are % (counts/sample size) or Mean ± 1 Standard Deviation.

Treatment group comparisons were performed using Fisher's Exact test for categorical variables. For continuous variables, the Shapiro-Wilk test was used to test normality of Time to Hemostasis and Time to Ambulation. The p-value from this test was <0.001, indicating non-normality and skewness of the data distribution. Therefore the Wilcoxon Rank Sum Test was used to calculate the p-value between the two groups.

* Procedure success was defined as the attainment of final hemostasis using any method and freedom from major vascular complications. StarClose subject 01-315 had time of hemostasis (T6) missing; therefore, Procedure Success was incalculable. Standard compression subjects 01-304, 01-307, 01-311, 01-313, 01-317, 01-321, 01-327, 01-332, 01-333, 01-340, 01-355, 03-305, 04-308, 06-317, 06-330, and 16-310 had the "seconds" field incomplete for time of hemostasis (T6), and therefore procedure success was not calculable.

** Device success was defined as the attainment of final hemostasis using the StarClose VCS alone or with adjunctive compression ≤5 minutes and freedom from major vascular complications. Device success could not be calculated for two (2) Starclose subjects; 01-315 had time of hemostasis (T6) missing and 15-307 had time procedural sheath removed (T2) missing.

*** Time to hemostasis was defined as the elapsed time between sheath removal and first observed hemostasis. The time to hemostasis was calculated by subtracting CRF IVC 007, Q. 11.7 (time Introducer sheath removed) from IVC 007, Q.11.8 (time hemostasis first observed) for device subjects, or calculated by subtracting CRF IVC 008, Q. 12.1 (time procedural sheath removed) from IVC 008, Q.12.2 (time hemostasis first observed) for control subjects. StarClose subjects 02-117, 04-303, 04-305, 04-307, 10-305 and control subject 02-304 had time to hemostasis equal to '0'. These values have been queried and confirmed by the investigators. StarClose subjects with incalculable values for TTH were 15-307 and 01-315. Standard compression subjects with incalculable TTH values were: 01-304, 01-307, 01-311, 01-313, 01-317, 01-321, 01-327, 01-332, 01-333, 01-340, 01-355, 03-305, 04-308, 06-317, 06-320, 06-330, and 16-310.

**** Time to ambulation was defined as the elapsed time between sheath removal and time when the subject stood and walked at least 20 feet without re-bleeding. The time to ambulation was calculated by subtracting IVC 007 Q.11.7 (time Introducer sheath removed) for device subjects or IVC 008 Q. 12.1 (time procedural sheath removed) for control subjects, from CRF IVC 011, Q.1.8 (time of first ambulation). StarClose subjects with incalculable time to ambulation values were: 01-315, 02-319, 02-335, 04-304, 06-308, and 15-307. The standard compression subject with an incalculable value for time to ambulation was 01-317.

Table 9: Effectiveness Results by Post-Procedure Time Interval for Interventional ITT Patients

Percentage of Patients Achieving Hemostasis within Time Interval		< 5 min	< 10 min	< 15 min	< 30 min	< 60 min	≤ 120 min	> 120 min		
	Star Close *	83.2 % (153/ 184)	89.1% (164/ 184)	90.8 % (167/ 184)	94.0% (173/ 184)	94.6% (174/ 184)	96.2% (177/ 184)			
	Stand-ard Compre ssion **	2.7% (2/74)	4.1% (3/74)	10.8% (8/74)	77.0% (57/74)	90.5% (67/74)	97.3% (72/74)			
Percentage of Patients Ambulating Within Time Interval		< 1 hr	< 2 hrs	< 3 hrs	< 4 hrs	< 6 hrs	< 12 hrs	< 18 hrs	≤ 20 hrs	> 20 hrs
	Star Close #	0% (0/184)	0% (0/184)	2.2% (4/184)	5.4% (10/184)	66.3% (122/184)	84.8% (156/184)	92.4% (170/184)	92.9% (171/184)	96.7% (178/184)
	Stan-dard Compre ssion ##	2.2% (2/91)	2.2% (2/91)	2.2% (2/91)	5.5% (5/91)	38.5% (35/91)	83.5% (76/91)	96.7% (88/91)	97.8% (89/91)	98.9% (90/91)

*Table 1 on page 12 of the submission notes there is no data for subjects 01-315 and 15-307, resulting in only 182 StarClose subjects with actual times recorded.

** Note 3 of Table 21 on page 59 of the submission states that 17 subjects had no time to hemostasis recorded, leaving 74 Compression subjects (blue) with actual times recorded. Values in orange include all subjects.

Six (6) subjects had no time to ambulation noted due to the absence of one or more data points needed to calculate TTA.

One (1) subject had no time to ambulation noted due to the absence of one or more data points needed to calculate TTA.

REPUNCTURE THROUGH STARCLOSE CLIP

The safety of repuncture at any time through any part of a previously deployed StarClose™ Clip, and the safety of subsequent closure of this repuncture using the StarClose™ Vascular Closure System, have not been fully established. The following information is provided to assist the operator in assessing the possible risks that may be associated with such repuncture and repuncture closure, which include Clip dislodgement, Clip embolization, and bleeding.

Two bench studies with a porcine aorta model were performed to assess the safety and effectiveness of needle puncture and sheath passage, as well as the security of reclosure with the StarClose™ device on or adjacent to a previously placed Clip. The reclosure success criterion was pass/fail aquastasis. The porcine aorta model was pressurized to 130 mm Hg in one of the bench studies and to 260 mm Hg in the other bench study. These studies were performed in a simulated setting because a clinical trial would not be adequate in testing the worst case scenario since the likelihood of hitting the Clip in the clinical setting is very low.

Each study evaluated 4 positions of a second Clip relative to a previously placed Clip, with the second Clip deployed in the center of or inferior, lateral, or superior to the first Clip, and evaluated 2 sheath sizes, which were 5F and 8F (which "bracket" the 5F and 6F sizes used in the clinical study), resulting in a 4 x 2 matrix that established 8 different Clip position/sheath size groups. For each of the 8 groups, 32 Clips were tested, resulting in 256 Clip deployments. The sample size of 32 Clips for each group was statistically determined. Fewer than 32 pieces of porcine aortic tissue were used in each

group. Each piece of tissue was used until there was no reasonable surface space left on the tissue for further deployments, at which time the tissue was replaced with a fresh, unused piece of tissue.

In each study the StarClose Clip was deployed, and then intentionally repunctured through the center of the Clip. Subsequent Clips were then deployed and intentionally repunctured incrementally at the inferior, then lateral, and then superior aspect of the Clip surface, resulting in a total of 4 Clips incrementally added through/around the first Clip. All needles used for the initial puncture and subsequent repunctures were commercially available 18 gauge x 7.0 cm percutaneous entry needles (compatible with 0.038" guide wires), which are the standard needles used in the majority of femoral artery access procedures. Following the repunctures, 5F and 8F sheaths were inserted. In every case, the sheath was successfully inserted and a catheter could easily pass through the sheath.

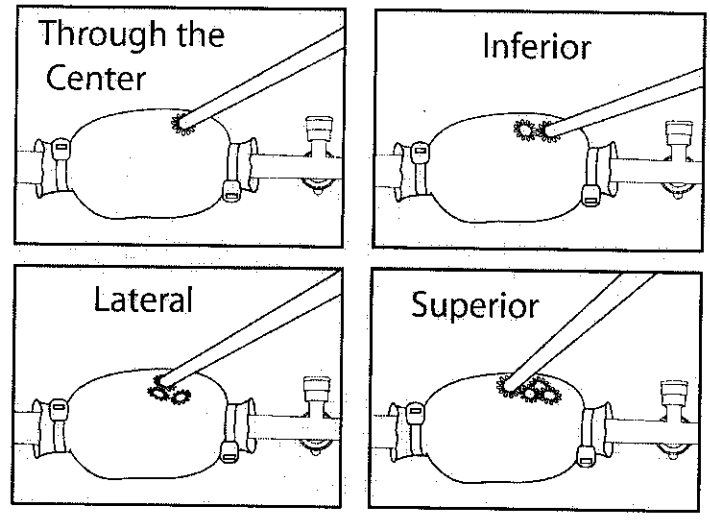

Then, in each case the indwelling sheath was exchanged for a 6F StarClose sheath and the StarClose device was used to close the repuncture. In every case, a second Clip was successfully deployed and secure closure was achieved. There were no cases where the first Clip was dislodged.

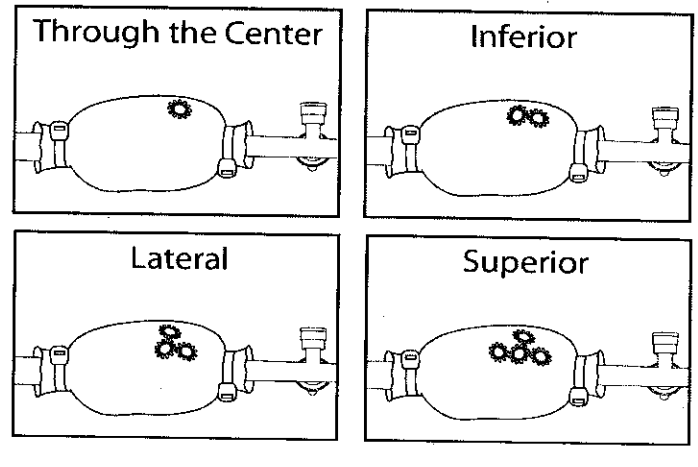

CLOSURE PROCEDURE

CAUTION:

Do not use the StarClose Vascular Closure System if the puncture site is located in the superficial femoral artery or the profunda femoris artery, since such puncture sites may result in as a

pseudoaneurysm, intimal dissection, acute vessel closure (thrombosis of small artery lumen) . Perform a femoral angiogram to verify the location of the puncture site.

1. It is necessary to create a 5-7 mm skin incision at the sheath site to accommodate the insertion of the Clip Delivery Tube into the tissue tract. This should be done at the beginning of the procedure prior to the administration of anticoagulants and antiplatelet agents, if possible. Consider blunt dissection by single spread with a surgical instrument in the skin incision.
2. Perform a femoral angiogram through the side port of the procedural sheath to evaluate the femoral artery for size, calcium deposits, vessel size, tortuosity, and for disease or dissection of the arterial wall. .
3. Re-prep the access site, placing clean towels around the access site, and wearing new sterile gloves prior to handling the Clip Applier and proceeding with the closure procedure.
4. Prepare the access site for closure:
   a. If using the StarClose 6F Introducer Set for the closure procedure, remove all devices from the access site except for the StarClose Introducer Sheath. Aspirate and then flush the StarClose Introducer Sheath before introducing the StarClose Clip Applier.
   b. If using a non-StarClose 6F (or smaller) Introducer Sheath, insert a guide wire and exchange for a StarClose Exchange Sheath or StarClose Introducer Sheath.
5. Remove the Clip Applier from the package using aseptic technique.
6. Connect the Clip Applier to the StarClose Introducer Sheath or the StarClose Exchange Sheath as follows **(Figure 2)**:
   a. Approximate the Clip Applier to the Hub of the StarClose Introducer Sheath/Exchange Sheath.
   b. Insert the distal tip of the Shaft of the Clip Applier into the StarClose Introducer Sheath/Exchange Sheath Hub.

Note: Take care not to severely bend the Clip Applier Shaft during insertion.

Note: When connecting the Sheath Hub to the Clip Applier, hold the Hub at the same angle as the tissue tract and above the skin surface. This action allows a firm connection to be made without pushing against the skin.

   c. Slowly advance the Shaft of the Clip Applier down through the StarClose Introducer Sheath/Exchange Sheath.
   d. Align the Sheath Side Arm of the Introducer Sheath or the Finger Grip of the Exchange Sheath so that it fits into the Alignment Notch on the Clip Applier.
   e. Connect the Clip Applier to the Hub by pushing the Clip Applier firmly into the Hub **(Figure 2)**. An audible "click" will be heard.

Note: Check to ensure that the Hub to Clip Applier engagement is secure, by gentle manipulation, slight rotation, and gentle pulling on the Hub of the Introducer Sheath or the Finger Grip of the Exchange Sheath.

7. Orient the connected StarClose Vascular Closure System so that the Side Arm/Finger Grip is vertical, pointing up, and the Body of the Clip Applier is at the angle of the tissue tract with reference to the skin.
8. Grasp the inferior aspect of the Finger Loop on the Clip Applier with the left hand to stabilize the device at the angle of the tissue tract. Depress the Vessel Locator Button on the end of the Clip Applier using the right hand to open and lock the Vessel Locator in the expanded configuration. A muted "click" will be heard **(Figure 3).**

Note: Check to insure that the Vessel Locator Button is pushed fully forward until it locks into the Clip Applier Body.

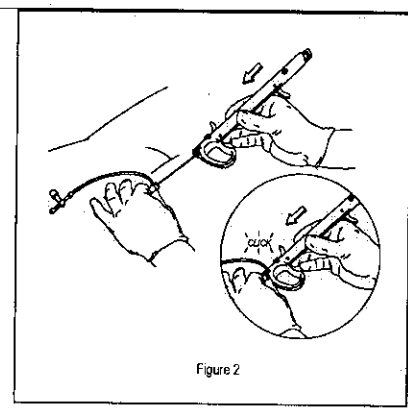
Figure 2

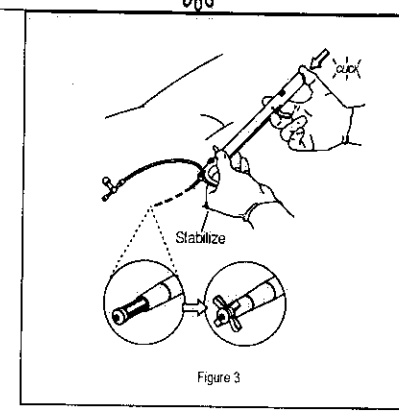

Figure 3

9. Advance the Thumb Advancer:
   a. Grasp the inferior aspect of the Finger Loop on the Clip Applier with the left hand to stabilize the device at the angle of the tissue tract **(Figure 5)**.
   b. Retract the device out of the tissue 1 to 2 cm with the right hand. Maintain a "palm up" grip on the Body of the device with the right hand and advance the Thumb Advancer 1 to 2 cm with the pad of the right thumb. The initial splitting of the sheath can be seen above skin level.
   c. Maintain the angle of the tissue tract and continue to stabilize the device with the left hand on the Finger Loop of the Clip Applier. Gently retract the device with the right hand until the Vessel Locator is against the arterial wall and slight resistance is felt. The goal is to locate the arteriotomy without applying tension on the artery **(Figure 4)**.
   d. While maintaining apposition of the Vessel Locator to the anterior surface of the artery, place the right index finger on the Finger Post, and the right middle two fingers in the Finger Loop, *and* advance the Thumb Advancer using the pad of the right thumb **(Figure 5)**.

Note: Keep the Shaft of the device straight while advancing the Thumb Advancer. Do not advance the Thumb Advancer against excessive force. If excessive force is experienced while advancing the Thumb Advancer, it may potentially cause a problem with the collapse of the Vessel Locator Wings.

If excessive force is met during advancement of the Thumb Advancer, the device should be removed following these steps:

- Retract the Thumb Advancer back to lessen any interaction with the Shaft.
- Slide the Safety Release Button.
- Remove the device.

If the device cannot be removed easily, the operator should place the left hand on the access site with the palm down, with the Clip Delivery Tube extending up between the index and middle finger. The operator should provide counter-traction with the left hand on the patient's body, and assertively pull the device out with the right hand. It is important not to rock or twist the device while the Vessel Locator Wings are in the open position as this may cause arterial damage.

Note: This movement advances the Clip Delivery Tube through the Introducer Sheath/Exchange Sheath, causing the tube to split longitudinally from the hub to the distal tip.

   e. Move the Thumb Advancer forward until it reaches the Finger Loop. The Finish Arrow will align with the arrow on the Thumb Advancer and an audible "click" will be heard when the Thumb Advancer is fully advanced **(Figure 5)**.

Note: Visually check to make sure that the arrow on the Thumb Advancer is aligned with the Finish Arrow. The Trigger will not function if the arrows are not completely aligned.

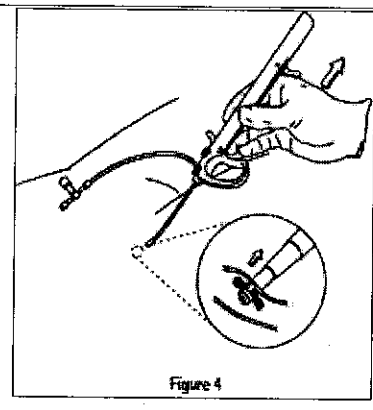

Figure 4

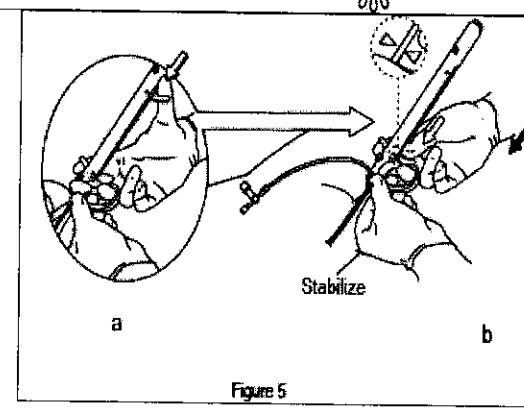

Figure 5

10. Raise the device to a 60 to 75 degree angle. Stabilize the device by grasping the Clip Delivery Tube with sterile gauze at the skin surface and allow the weight of the device to rest on the artery or gently push down on top of the artery **(Figure 6)**.

Note: For optimal Clip delivery, it is important to raise the device to a 60 to 75 degree angle, taking care to check that the arrows are in complete alignment prior to elevating the device to a higher angle, and to maintain no tension between the StarClose Vascular Closure System and the vessel.

11. Depress the Trigger until an audible "click" is heard and the Vessel Locator Button resets to its original position **(Figure 6)**. This releases the Clip into the anterior wall of the artery and closes the access site. The Vessel Locator automatically collapses and the Vessel Locator Button automatically resets when the Clip is released **(see Figure 6 insert)**. While providing counter-traction with the left hand on the patient's body, remove the device from the patient's body with the right hand.

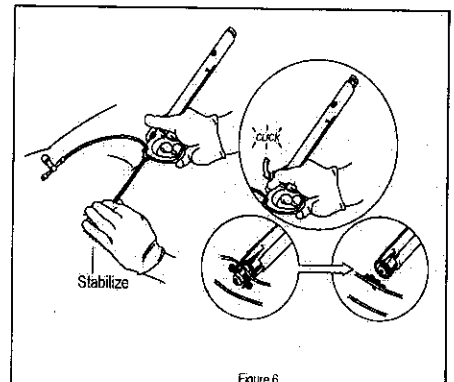

Figure 6

Note: If resistance is met upon attempted removal of the device, the following steps should be taken:

- Check the Safety Release Button to assure that it is in the activated position.
- Depress the Vessel Locator Button gently in and out.
- Remove the StarClose Device.

Place the left hand on the access site with the palm down, with the Clip Delivery Tube extending up between the index and middle finger. The operator should provide counter-traction with the left hand on the patient's body, and assertively pull the device out with the right hand. It is important not to rock or twist the device while the Vessel Locator Wings are in the open position as this may cause arterial damage.

12. Slowly remove the system from the access site, without rotating.
13. Use sterile gauze to manually depress the area surrounding the access site to express any blood in the skin tract. Test for security of the closure by having the patient lift his/her head off of the table, cough, and lift his/her leg against the operator's hand.
14. If, for any reason, it is desired to abort the closure procedure prior to clip deployment, the Vessel Locator must be collapsed manually before the system is removed from the tissue tract. For manual collapse of the Vessel Locator:
    a. Retract the Thumb Advancer, unless it is in the locked position.
    b. Slide the Safety Release Button forward. The button is recessed into the Body of the device to prevent accidental release. Use a finger, hemostat, forceps, or other suitable tool to slide the button forward as shown in the figure below.

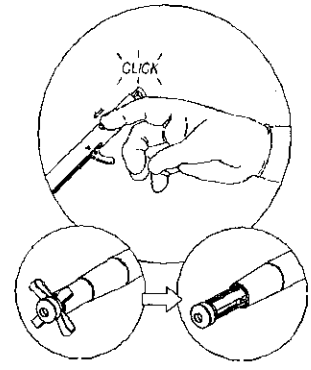

Note: An audible "click" will be heard when the Safety Release Button collapses the Vessel Locator. The Vessel Locator Button will reset to its original position, signaling the collapse of the Vessel Locator.

c. When the Vessel Locator has collapsed, the system can be withdrawn from the tissue tract and manual compression can be applied to achieve hemostasis.

POST PROCEDURE PATIENT MANAGEMENT

- Apply an appropriate dressing to the puncture site.
- Assess the insertion site as per hospital protocol.

RECOMMENDATION FOR PATIENT AMBULATION AND DISCHARGE

In determining whether to ambulate or discharge an individual patient, it is important to consider all clinical factors including, but not limited to, anticoagulation regimen, antiplatelet and thrombolytic agents administered, oozing or bleeding from the access site, venous access site hemostasis, the general cardiovascular condition of the patient, anesthetic levels, and the overall clinical condition of the patient. Data from the PMA study is provided in this IFU to assist in determining the course of action for each patient.

PRODUCT INFORMATION DISCLOSURE

Abbott Vascular Inc.has exercised reasonable care in the manufacture of this device. Abbott Vascular Inc. excludes all warranties, whether expressed or implied, by operation of law or otherwise, including but not limited to, any implied warranties of merchantability or fitness, since handling and storage of this device, as well as factors relating to the patient, diagnosis, treatment, surgical procedures, and other matters beyond the control of Abbott Vascular Inc. directly affect this device and the results

obtained from its use. Abbott Vascular Inc. shall not be liable for any incidental or consequential loss, damage, or expense, directly or indirectly arising from the use of this device. Abbott Vascular Inc. neither assumes, nor authorizes any other person to assume for it, any other or additional liability or responsibility in connection with this device.

HOW SUPPLIED

The StarClose Vascular Closure System and accessories are provided sterile and non-pyrogenic in unopened, undamaged packaging. Products are sterilized with ethylene oxide and intended for single use only. Do not resterilize. The device and primary packaging do not contain latex. Store in a cool, dry place.

StarClose Vascular Closure System **List Number/REF 14677-01**
contains:
- One (1) StarClose Clip Applier
- One (1) Exchange Sheath (11 cm)
- One (1) Dilator
- One (1) 0.038" (0.97 mm) J Tip Guide Wire

StarClose Clip Applier **List Number/REF 82142**
contains:
- One (1) StarClose Clip Applier

StarClose Introducer Set **List Number/REF 14678-01**
contains:
- One (1) 6F Introducer Sheath (11 cm)
- One (1) 6F Dilator
- One (1) 0.038" (0.97 mm) J Tip Guide Wire

Graphical Symbols for Medical Device Labeling

LOT	Batch code		Do not resterilize.
	Date of Manufacture		Do not reuse.
	Use by	NON PYROGENIC	Non-Pyrogenic
REF	Catalogue number	LATEX	Latex Free
CONTENTS	Contents		Do not use product if packaging or sterile barrier has been previously opened or damaged.
	Number of units	25C	Store in a cool location (room temperature).
Rx ONLY	**CAUTION:** Federal (USA) law restricts this device to sale by or on the order of a physician.		Keep dry
	Caution, refer to accompanying documents.		Manufactured by
STERILE EO	Sterilized using ethylene oxide	DIST	Distributed by

Abbott Laboratories
Abbott Vascular Inc.
400 Saginaw Drive
Redwood City, CA 94063 USA

DIST
Distributed in the U.S. by Abbott Labs.
Customer Service: 1-800-227-9902

Manufactured under one or more of the following U.S. patents:

5,007,921	6,197,042	6,623,510	6,719,777
5,026,390	6,277,140	6,626,918	6,749,621
5,674,231	6,391,048	6,632,238	6,780,197
5,810,846	6,461,364	6,695,867	6,942,674

Other patents pending.