10 5/32

Pantone 871-C
Pantone 185 C
Pantone 428 C
Black

2 1/8 | 5 19/32 | 2 9/32

1

septodont

Septocaine® with epinephrine 1:100,000

Articaine hydrochloride 4% with Epinephrine 1:100,000 Injection

Store at 25°C (77°F)

Rx Only

Made in Canada for distribution by
SEPTODONT, Inc.

FOR INFILTRATION AND NERVE BLOCK ANESTHESIA. NDC 0362-9049-02

septodont

Septocaine®
with epinephrine 1:100,000

DIRECTIONS FOR USE
Please consult the insert inside the package.
Do not inject intravenously.
FOR PROFESSIONAL USE ONLY IN THE PRACTICE OF DENTISTRY.
To be sold only as an unbroken package.
Protect from light.
Keep in carton until ready to use.
Do not use if color is pinkish or darker than slightly yellow or if it contains a precipitate.
WARNING Do not permit to freeze.

Distributed by : SEPTODONT, Inc.
245 Quigley Boulevard - Suite C
NEW CASTLE, Delaware 19720 U.S.A.
Made in Canada.

septodont

Septocaine® with epinephrine 1:100,000

Articaine hydrochloride 4% with Epinephrine 1:100,000 Injection

Contains sodium metabisulfite.
See warnings section of insert for details.

50 cartridges: 1.7 mL each

Made in Canada by
Novocol Pharmaceutical of Canada, Inc.

septodont

Septocaine®
with epinephrine 1:100,000

Lot No.
Exp.

Each mL contains :
Articaine hydrochloride .....40 mg
Epinephrine tartrate .....0.018 mg
corresponding in epinephrine
base to .....0.01 mg
Sodium chloride .....1.60 mg
Sodium metabisulfite .....0.50 mg
Sodium hydroxide q.s. to adjust pH
Water for injections q.s. ad .....1 mL

Made in Canada by
Novocol Pharmaceutical of Canada, Inc.

1

septodont

Septocaine® with epinephrine 1:100,000

Articaine hydrochloride 4% with Epinephrine 1:100,000 Injection

INDICATIONS: This drug product is indicated for local, infiltrative, or conductive anesthesia in both simple and complex dental procedures.

(01)40303629049022

2553-1

NOVO7

.015pt FRA DUO

Distributed by : SEPTODONT, Inc.
245 Quigley Boulevard - Suite C
NEW CASTLE, Delaware 19720 U.S.A. Product of Canada.

FOR INFILTRATION AND NERVE BLOCK ANESTHESIA. NDC 0362-9049-02

25/32

septodont

Septocaine® with epinephrine 1:100,000

Articaine hydrochloride 4% with Epinephrine 1:100,000 Injection

Contains sodium metabisulfite.
See warnings section of insert for details.

50 cartridges: 1.7 mL each

Distributed by : SEPTODONT, Inc.
245 Quigley Boulevard - Suite C
NEW CASTLE, Delaware 19720 U.S.A.
Product of Canada.

FOR INFILTRATION AND NERVE BLOCK ANESTHESIA. NDC 0362-9049-02

Septocaine® with epinephrine 1:100,000

Articaine hydrochloride 4% with Epinephrine 1:100,000 Injection

Contains sodium metabisulfite.
See warnings section of insert for details.

50 cartridges: 1.7 mL each

Made in France by :
SEPTODONT ®

septodont

Made in France by :
SEPTODONT ®

septodont

Each mL contains:
Articaine hydrochloride ..... 40.018 mg
Epinephrine bitartrate ..... 0.018 mg
Sodium chloride ..... 1.60 mg
Sodium metabisulfite ..... 0.50 mg
Sodium hydroxide q.s. to adjust pH
Water for Injections q.s. ad ..... 1 mL
Exp.

septodont

Septocaine® with epinephrine 1:100,000

0011422808 00

Septocaine® with epinephrine 1:100,000

Articaine hydrochloride 4% with Epinephrine 1:100,000 Injection

(01)43703629049027

Store at 25°C (77°F)

Rx Only

Made in France by :
SEPTODONT ®

septodont

® 01 1-228 08 00

FOR INFILTRATION AND NERVE BLOCK ANESTHESIA. NDC 0362-9049-02

Septocaine® with epinephrine 1:100,000

Articaine hydrochloride 4% with Epinephrine 1:100,000 Injection

Contains sodium metabisulfite.
See warnings section of insert for details.

50 cartridges: 1.7 mL each

Distributed by : SEPTODONT, Inc.
245 Quigley Boulevard - Suite C
NEW CASTLE, Delaware 19720 U.S.A.
Product of France.

septodont

DIRECTIONS FOR USE
Aseptic precautions must be observed inside the package.
Do not inject intravenously.
FOR PROFESSIONAL USE ONLY IN THE PRACTICE OF DENTISTRY.
To be sold only as an unbroken package.
Keep in carton until ready to use.
Do not use if solution is darker than slightly yellow or if it contains a precipitate.
WARNING:
Do not permit to freeze.

septodont

Septocaine® with epinephrine 1:100,000

0011422808 00

FOR INFILTRATION AND NERVE BLOCK ANESTHESIA. NDC 0362-9049-02

Septocaine® with epinephrine 1:100,000

Articaine hydrochloride 4% with Epinephrine 1:100,000 Injection

INDICATIONS
This drug product is indicated for local, infiltrative, or conductive anesthesia in both simple and complex dental procedures.

Distributed by : SEPTODONT, Inc.
245 Quigley Boulevard - Suite C
NEW CASTLE, Delaware 19720 U.S.A. Product of France.

CCL LABEL

TORONTO, CANADA
35 McLachlan Drive, Etobicoke, Ontario M9W 1E4
Telephone: (416) 675-3161 • Fax: (416) 674-1275

Proof # 2
Client: NOVOCOL PHARMACEUTICAL
Item #: 2551-2 Draft
M.S.F.#: 316548
Date: May 2, 2006
Proof for colour separation.

GRAPHICS
1st : Checked by:
2nd : Checked by:

☐ APPROVED ☐ NEW PROOF REQUIRED

DATE	AUTHORIZED SIGNATURE

#1 WHITE 1(UVF) #2 WHITE 2(UVF) #3 PMS 871(UVF) #4 Black(UVF)

FRONT LABEL 2 / BACK LABEL

1 PRINTING 2 PRINTING 3 PRINTING 4 PRINTING 5 PRINTING 6 PRINTING 7 PRINTING 8 PRINTING

PLEASE NOTE!
CCL LABEL CAN NOT PROCEED WITH YOUR ORDER WITHOUT YOUR SIGNATURE ON THIS PROOF. CCL LABEL WILL NOT BE RESPONSIBLE FOR ANY ERRORS OR OMISSIONS ON THIS PROOF AFTER THE PROOF HAS BEEN APPROVED. ANY REQUESTED CHANGES TO YOUR ORIGINAL ARTWORK SUPPLIED TO CCL LABEL WILL RESULT IN ADDITIONAL CHARGES. TO MAXIMISE OUR PRESS CAPABILITIES, YOUR ARTWORK AND/OR TYPE MAY HAVE BEEN MODIFIED TO ENSURE THE BEST POSSIBLE PRINT QUALITY.

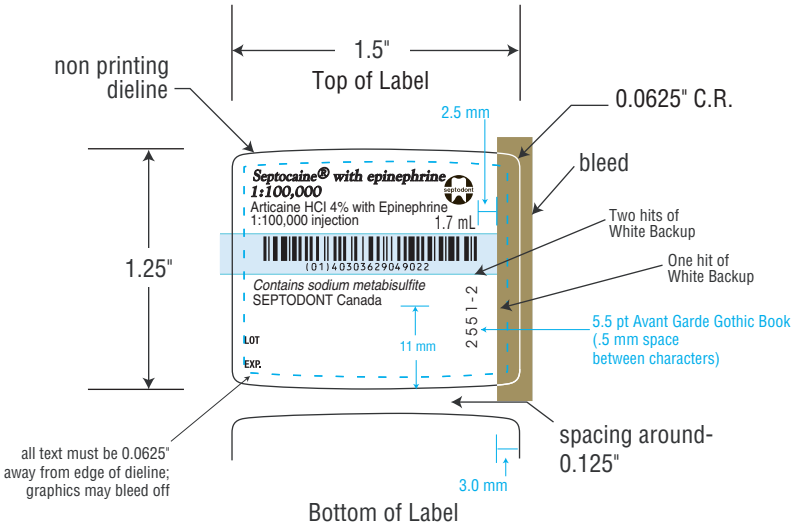

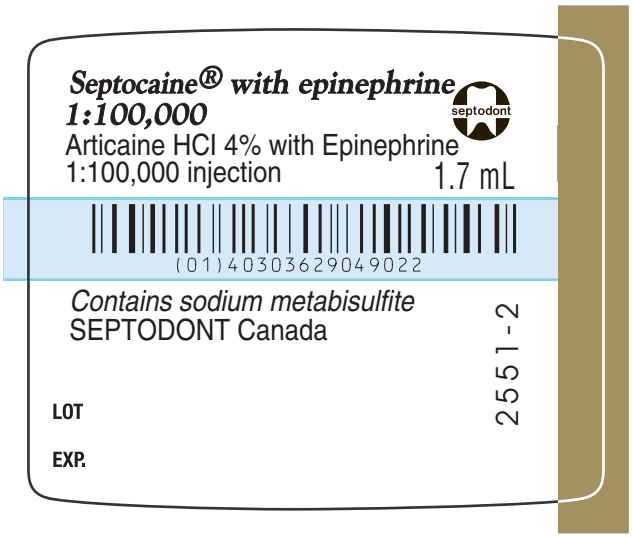

200%

Septocaine® with epinephrine
1:100,000
Articaine HCl 4% with Epinephrine
1:100,000 injection
1.7 mL
(01)4370362904902 7
Contains sodium metabisulfite
SEPTODONT FRANCE
Lot:
Exp: