CENTER FOR DRUG EVALUATION AND RESEARCH

APPLICATION NUMBER:

022047Orig1s000

STATISTICAL REVIEW(S)

U.S. Department of Health and Human Services
Food and Drug Administration
Center for Drug Evaluation and Research
Office of Translational Sciences
Office of Biostatistics

STATISTICAL REVIEW AND EVALUATION

CLINICAL STUDIES

NDA/Serial Number:	22-047 / N000
Drug Name:	SEROQUEL SR (quetiapine fumarate)
Indication(s):	Treatment of Schizophrenia
Applicant:	AstraZeneca
Date(s):	Received: July 17, 2006;
	PDUFA Due Date: May 17, 2007
Review Priority:	Standard
Biometrics Division:	Biometrics I, HFD-710
Statistical Reviewers:	Phillip Dinh, Ph.D.
Concurring Reviewers:	Peiling Yang, Ph.D.
	H.M. James Hung, Ph.D.
Medical Division:	Division of Psychiatric Products, HFD-130
Clinical Team:	Michelle Chuen M.D., Medical Reviewer, HFD-130
	Ni Aye Khin M.D., Medical Team Leader, HFD-130
Project Manager:	Kimberly Updegraff, MS, R.Ph., HFD-130

Keywords: LOCF, multiple comparisons, repeated measure ANCOVA

Table of Contents

LIST OF TABLES

LIST OF FIGURES

1. EXECUTIVE SUMMARY

1.1 Conclusions and Recommendations

The sponsor submitted three efficacy studies to seek the approval for the efficacy and safety of quetiapine fumarate sustained release (SR) in the treatment of schizophrenia. Statistical evidence of the efficacy of quetiapine fumarate SR at doses of 400mg/day, 600mg/day, and 800mg/day was supported by one non-U.S. study, study 132. The U.S. and Canadian study 041 provided some evidence of the efficacy of dose 600mg/day. However, study 041 was considered a failed study because the active comparators (300 mg and 600mg daily IR) failed to separate from placebo. The U.S. study 133 failed to show efficacy in all doses under investigation (400mg SR/day, 600mg SR/day, and 800mg SR/day and the active comparator, 800mg IR/day).

The results for the non-U.S. study and U.S. studies appear inconsistent. It is not clear what contributed to the inconsistency although several possible explanations were thought of, such as larger dropout rates in U.S. studies, larger observed placebo effect in the non-U.S. study, unevenly distributed baseline disease status across studies, inconsistent observed treatment effects on normal BMI group across three studies, cultural differences in reporting systems, diagnostic differences in evaluating symptoms, differences in clinical standards and practices, reliability/validity of instruments across sites/countries, impact of instrument translation, etc. Thus, it is uncertain whether the results from the non-U.S. study can be generalized to the U.S. population.

1.2 Brief Overview of Clinical Studies

Study 132 was a 6-week, multi-center, randomized, double-blind, double-dummy, placebo-controlled study. Doses under investigation were 400mg SR, 600mg SR, and 800mg SR. To assess the validity of the study, dose 400mg IR (immediate release) was also included. The study included 665 subjects from non-US sites between the age of 18 and 65 who were diagnosed with schizophrenia. A total of 588 subjects were randomized. The primary efficacy outcome was the change from baseline in the total PANSS score.

Study 041 was a 6-week, multi-center, randomized, double-blind, placebo-controlled, parallel-group study. Doses under investigation were 300mg SR, 600mg SR, and 800mg SR. To assess the validity of the study, doses 300mg IR and 600mg IR were also included. The study included 736 subjects from the United States and Canada between the age of 18 and 65 who were hospitalized for less than 1 month and were diagnosed with schizophrenia. A total of 532 patients were randomized. The primary efficacy outcome was the change from baseline in the total PANSS score.

Study 133 was a 6-week, multi-center, double-blind, double-dummy, randomized, placebo-controlled study. Doses under investigation were 400mg SR, 600mg SR, and 800mg SR. The study also included 800mg IR as assay sensitivity. Seven hundreds and sixty four (764) subjects from the United States participated in the study. A total of 565 patients were randomized. This study failed to show efficacy in all doses considered.

This review mainly focuses on the efficacy evaluation for studies 132 and 041.

1.3 Statistical Issues and Findings

This reviewer confirmed the sponsor's findings for studies 132 that all three doses 400mg SR, 600mg SR, and 800mg SR were superior to placebo in the treatment of schizophrenia as measured by the change in the PANSS total score from baseline to Day 42. The findings for primary endpoint, especially doses 600mg SR and 800mg SR, were consistent for secondary supportive endpoints as well as across subgroups of age, gender and race. The dropout rate in study 132 was about 25% and did not seem to affect the final results. Some evidence of effectiveness at dose 600mg SR was also provided by study 041. However, this study had a higher dropout rate, the results were not consistent across supportive secondary endpoints, and the active comparators failed to separate from placebo. On average, study 132 had about 114 subjects per arm while study 041 had about 83 subjects per arm. Both studies recruited adequate sample sizes for the planned effect size to assess the efficacy of doses under investigation with at least 80% power.

2. INTRODUCTION

2.1 Overview

According to the sponsor, schizophrenia is a chronic and disabling idiopathic psychotic disorder with an estimated worldwide prevalence of approximately one percent. The costs of schizophrenia in terms of care, lost productivity, and homelessness place a high social and financial burden on the patient, family, and community. In patients with schizophrenia, compliance with a treatment program is often problematic. It is estimated that as many as fifty percent of patients with schizophrenia may fail to adhere to the treatment regimens which leads to treatment failure, relapse, hospitalization, or suicide. There are many reasons for the noncompliance. Among them, a treatment complexity is an important factor.

Quetiapine fumarate was approved by the Food and Drug Administration (FDA) in 1997 in an immediate release (IR) form for the treatment of schizophrenia. Subsequently, quetiapine fumarate was approved for the treatment of acute mania associated with bipolar disorder in 2003. The sponsor submitted this NDA in seeking the approval for quetiapine fumarate in a sustained release (SR) form. This new presentation will permit quetiapine to be administered once daily instead of two or three times a day with the IR formulation. This treatment simplification will, hopefully, increase the compliance and decrease the treatment failure.

The sponsor submitted three efficacy studies with the intention to demonstrate that quetiapine SR is more efficacious to placebo in the treatment of schizophrenia (Studies 5077IL/0041, D1444C00132, and D1444C00133). Since study D1444C00133 failed to demonstrate the superior efficacy, the focus of this review will be on studies 5077IL/0041 and D1444C00132.

2.2 Data Sources

The sponsor's submitted data are stored in the following directory of the CDER's electronic document room:
\\Cdsesub1\n22047\N_000\2006-07-17\crt\datasets

3. STATISTICAL EVALUATION

3.1 Evaluation of Efficacy

3.1.1 Study D1444C00132

3.1.1.1 Objectives

Primary: To demonstrate the efficacy of quetiapine SR for the 3 doses 400mg/day, 600mg/day, and 800 mg/day, compared with placebo in the treatment of patients with schizophrenia.

Secondary:
- To demonstrate a higher response rate for the 3 doses of quetiapine SR tablets compared to placebo;

- To demonstrate the efficacy in patients' overall clinical status for the 3 doses of quetiapine SR tablets compared to placebo;
- To document the efficacy on psychiatric symptoms for all doses of quetiapine tablets;
- To assess the safety and tolerability of quetiapine SR tablets administered once daily; and
- To compare the safety and tolerability profiles of quetiapine SR and quetiapine IR.

3.1.1.2 Study Design

This was a 6-week, multi-center, randomized, double-blind, double-dummy, placebo-controlled study comprised three periods: screening and enrollment period (Day -7 to 0), randomized and dose escalation period (Day 1 to 6), and fixed dose period and follow up (Day 7 to 42). Subjects were from 39 centers from South Africa, Russia, Greece, Romania, Bulgaria, India, Indonesia, and Philippine. After baseline assessments on Day 1, patients were randomized to 1 of 5 treatments: quetiapine SR at 400, 600, or 800 mg daily, quetiapine IR at 400 mg daily, or placebo. Doses were escalated as in Figure 1. Efficacy and safety were assessed on Days 1, 7, 14, 21, 28, and 42 or last visit before discontinuation.

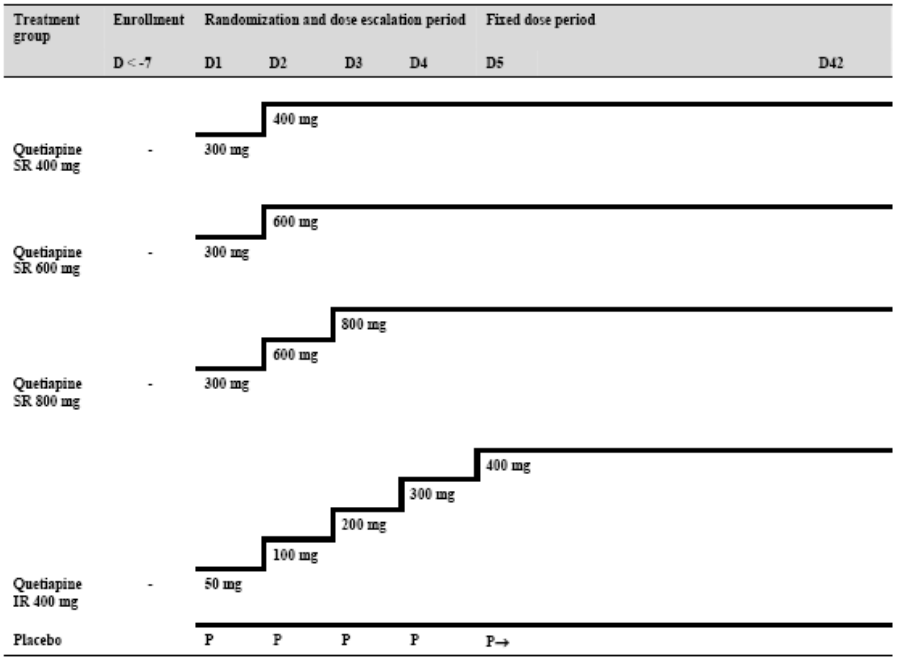

Figure 1. Study 132 flow chart
(Source: Clinical Study Report: Study D1444C00132; Figure 1, page 45)

Subjects were enrolled from November 2004 to December 2005. Acutely ill patients between the age of 18 and 65 years who met the Diagnostic and Statistical Manual for Mental Health Patients, 4th Edition (DSM-IV) were eligible to enroll if they had a Positive and Negative Syndrome Scale (PANSS) total score of ≥ 70 and a Clinical Global Impression (CGI) Severity of Illness score of at least 4 at randomization.

It was determined that 97 evaluable patients per treatment group were sufficient for 96.5% power overall 3 quetiapine SR treatment groups, assuming a mean difference of

12 points between active treatment and placebo for a change from baseline PANSS total score at Day 42.

3.1.1.3 Efficacy Endpoints and Analyses

Primary endpoint and analysis: Change in PANSS total score from baseline to Day 42. The change in PANSS total score will be evaluated using an analysis of covariance (ANCOVA) model that includes center as random effect, treatment as fixed effect, and baseline PANSS score as a covariate. Multiplicity will be controlled by the Hommel (1998) procedure.

Secondary endpoints and analyses: PANSS response rates, defined as a reduction of at least 30% from baseline PANSS total score at the end of treatment at Day 42; CGI Global Improvement rating ≤ 3 at the end of treatment at Day 42; change in the CGI Severity of Illness score from baseline at the end of treatment at Day 42; change from baseline PANSS total score at all subsequent visits; change in PANSS positive, negative and general psychopathology subscales from baseline at all subsequent visits; change in PANSS aggression/hostility and PANSS depression clusters from baseline at all subsequent visits. Continuous secondary endpoints will be evaluated using the ANCOVA methods similar to the primary analysis (without adjusting for multiplicity). Categorical endpoints will be analyzed using the Cochran-Mantell-Haenszel chi-square test.

All statistical analyses use last-observation-carried-forward methods in the modified intent-to-treat (MITT) population at a 5% significant level. The MITT population included all randomized patients who were given study treatment classified to the treatment, which they were randomized to, and who had a baseline value and at least one post-baseline PANSS assessment.

3.1.1.4 Efficacy Results

3.1.1.4.1 Study Population

Six hundreds and sixty five (665) subjects were screened for the study. The randomized study population included 588 patients. Seventy seven subjects failed screening and were excluded from the randomization. The MITT population included 573 subjects. The patient disposition is summarized in Figure 2. Approximately 76% of subjects completed the study. Among those who did not complete the study, lack of therapeutic response was the main reason.

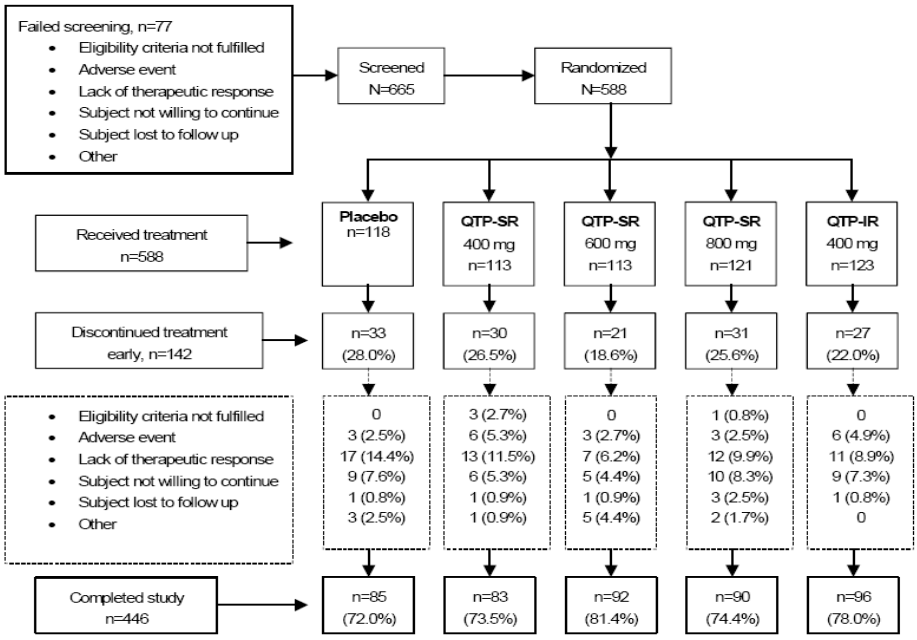

Figure 2. Patient disposition for study 132

(Source: Clinical Study Report: Study D1444C00132; Figure 2, page 93)

Table 1 summarizes key demographic and baseline disease characteristics of the modified intent-to-treat sample. Female subjects accounted for about 40% of the total sample. Subjects were between the ages of 18 to 64 with the average age of 34. The majority of the subjects were Caucasian. Next was Asian as this study was conducted at non-US sites (South Africa, Russia, Greece, Romania, Bulgaria, India, Indonesia, and Philippine). Patients in this study, on average, were in the normal BMI category (BMI 18.5-24.9, National Institute of Health). In general, the demographic and baseline disease characteristics appeared balanced among the five arms of the study.

Table 1. Demographic and Baseline Disease Characteristics in the Modified Intent-to-Treat Sample for Study 132; Reviewer's Results

	Placebo (N=115)	SR 400mg (N=111)	SR 600mg (N=111)	SR 800mg (N=117)	IR 400mg (N=119)	Total (N=573)
Female (%)	41.7	29.7	45.1	40.2	42.0	39.8
Age(*)						
mean (S.D.)	34.1 (12.1)	34.1 (9.6)	34.2 (9.9)	34.4 (10.3)	34.4 (10.2)	34.2 (10.4)
Min. – Max.	18 – 64	18 – 61	18 - 58	18 - 60	18 - 62	18 - 64
Race (% of patients)						
White	59.1	56.8	59.5	60.7	59.7	59.2
Black	4.4	4.5	3.6	4.3	5.9	4.5
Asian	36.5	38.7	36.0	35.0	34.5	36.1
Other	0	0	0.9	0	0	0.2
BMI(*)						
Mean (S.D.)	23.6 (5.6)	23.0 (4.6)	22.9 (4.7)	23.5 (4.9)	24.0 (5.4)	23.4 (5.1)
Min. - Max.	14.4 - 50.7	14.9 -40.4	13.6 - 40.0	14.6 - 44.9	15.5 - 47.6	13.6 - 50.7
PANSS total (*)						
Mean (S.D.)	96.2 (13.3)	95.8 (13.9)	96.8 (14.1)	97.3 (14.7)	96.5 (16.0)	96.6 (14.4)
Min. - Max.	70 - 130	70 - 146	68 - 139	70 - 141	70 - 156	68 - 156

(*) *Characteristics at baseline*

3.1.1.4.2 Sponsor's Efficacy Results for Primary Endpoint

The primary efficacy measure was the difference between the baseline and Day 42 (LOCF) in PANSS total score. The sponsor's primary efficacy result is presented in Table 2. The Hommel (1998) method was used to adjust the p-values for multiple comparisons. In this study, all three doses (400mg, 600mg, and 800mg) were statistically significantly different from placebo at the .05 level. Doses SR 600mg and SR 800mg appeared to show additional benefits over SR 400mg where dose SR 600mg and SR 800mg showed similar results.

Table 2. Primary Efficacy Analysis for Study 132: PANSS total score, change from baseline at Day 42; Sponsor's Results

	Placebo	SR 400mg	SR 600mg	SR 800mg	IR 400mg
Sample size (n)	115	111	111	117	119
LS Means	-18.8	-24.8	-30.9	-31.3	-26.6
Difference from placebo (SE)		-6.1 (2.78)	-12.1 (2.79)	-12.5 (2.76)	-7.8 (2.72)
Unadjusted p-values		0.03	< 0.0001	< 0.0001	0.0045
Adjusted p-values (*)		0.03	< 0.0001	< 0.0001	Not done

(*) Multiple comparisons were adjusted by Hommel's procedure.
(Source: Clinical Study Report: Study D1444C00132; Table 28, page 110)

3.1.1.4.3 Sponsor's Efficacy Results for Secondary Endpoints

PANSS response rate at Day 42: PANSS response rate was defined as an improvement of 30% or more from baseline in PANSS total score. The response rate analysis is presented in Table 3. There were statistically significant differences in response rates in all three investigational treatment doses (SR 400mg, SR 600mg, SR 800mg) compared to placebo as indicated by the confidence intervals of the odds ratios.

Clinical Global Improvement (CGI-I) at Day 42: Table 3 also summarizes the CGI-I at Day 42. Improvement was defined as a rating of "much improved," "improved," or "minimally improved" on the CGI Global Improvement scale. All three doses under investigation (SR 400mg, SR 600mg, SR 800mg) showed statistically significant improvement over placebo in the CGI Global Improvement score at Day 42 as indicated by the confidence intervals of the odds ratios.

Table 3. PANSS response rate and CGI Global Improvement score at Day 42 for Study 132; Sponsor's Results

	Placebo (N=115)	SR 400mg (N=111)	SR 600mg (N=111)	SR 800mg (N=117)	IR 400mg (N=119)
PANSS response rate					
Patients responding: n (%)	35 (30.4)	49 (44.1)	67 (60.4)	66 (56.4)	63 (52.9)
Odds ratio (active vs. placebo) (CI)		1.8 (1.05-3.12)	3.5 (2.01-6.03)	3.0 (1.72-5.07)	2.6 (1.50-4.40)
CGI-I					
Patients responding: n (%)	69 (60.0)	82 (73.9)	88 (79.3)	90 (76.9)	90 (75.6)
Odds ratio (active vs. placebo) (CI)		1.9 (1.07-3.31)	2.6 (1.41-4.61)	2.2 (1.26-3.93)	2.1 (1.18-3.62)

(Source: Clinical Study Report: Study D1444C00132; Table 29, page 112; Table 31, page 114. Confidence intervals are not adjusted for multiple doses.)

Change from baseline in Clinical Global Impression (CGI) Severity of Illness Score at Day 42: The changes from baseline in CGI-Severity of Illness Score are presented in Table 4. Doses SR 600mg and SR 800mg were statistically significantly different from placebo at Day 42. Dose SR 400mg also showed numerical improvement in least squares means, but was not statistically significant.

PANSS Positive symptom subscale, change from baseline at Day 42: The changes from baseline at Day 42 in the PANSS Positive symptom subscale scores are summarized in Table 4. Improvements from baseline in PANSS Positive subscale score were seen in all three doses under investigation.

PANSS Negative symptom subscale, change from baseline at Day 42: The changes from baseline at Day 42 in the PANSS Negative symptom subscale scores are summarized in Table 4. Improvements from baseline in PANSS Negative subscale score were seen in two of the three doses under investigation (SR 600mg and SR 800mg). An improvement in the dose SR 400mg was also seen, although, it did not reach the statistically significant level.

PANSS General Psychopathology symptom subscale, change from baseline at Day 42: The changes from baseline at Day 42 in the PANSS General Psychopathology symptom subscale scores are summarized in Table 4. Improvements from baseline in PANSS General Psychopathology subscale score were seen in all three doses under investigation.

PANSS Depression symptom subscale, change from baseline at Day 42: The changes from baseline at Day 42 in the PANSS Depression symptom subscale scores are summarized in Table 4. Improvements from baseline in PANSS Depression subscale scores were seen in two of the three doses under investigation (SR 600mg and SR 800mg). An improvement in the dose SR 400mg was also seen, although, it did not reach the statistically significant level.

PANSS aggression and hostility cluster score, change from baseline at Day 42: The changes from baseline at Day 42 in the PANSS aggression and hostility cluster scores are summarized in Table 4. Improvements from baseline in PANSS aggression and hostility scores were seen in all three doses under investigation.

Reviewer's notes: For these secondary variables, the p-values and confidence intervals were not adjusted for multiple endpoints and multiple doses. Thus, these results can only be considered exploratory and supporting the primary analysis.

Table 4. Change from Baseline in Selective Secondary Variables for Study 132 at Day 42; Sponsor's Results

	Placebo	SR 400mg	SR 600mg	SR 800mg	IR 400mg
Sample size (n)	115	111	111	117	119
CGI-S					
LS Means	-1.0	-1.3	-1.5	-1.6	-1.3
Difference from placebo (SE)		-0.3 (0.15)	-0.5 (0.15)	-0.6 (0.15)	-0.3 (0.15)
Unadjusted p-values		0.089	0.0009	< 0.0001	0.0330
PANSS positive					
LS Means	-5.9	-7.7	-10.1	-9.5	-8.9
Difference from placebo (SE)		-1.8 (0.87)	-4.2 (0.87)	-3.6 (0.86)	-3.0 (0.85)
Unadjusted p-values		0.0442	< 0.0001	< 0.0001	0.0005
PANSS Negative					
LS Means	-4.2	-5.5	-6.3	-7.3	-5.6
Difference from placebo (SE)		-1.3 (0.76)	-2.1 (0.76)	-3.1 (0.76)	-1.4 (0.75)
Unadjusted p-values		0.0901	0.0055	< 0.0001	0.0718
PANSS General					
LS Means	-8.8	-11.7	-14.6	-14.4	-12.2
Difference from placebo (SE)		-2.9 (1.33)	-5.8 (1.33)	-5.7 (1.33)	-3.5 (1.31)
Unadjusted p-values		0.0278	< 0.0001	< 0.0001	0.0086
PANSS Depression					
LS Means	-2.6	-2.8	-3.5	-3.3	-3.2
Difference from placebo (SE)		-0.2 (0.33)	-0.9 (0.33)	-0.6 (0.33)	-0.6 (0.32)
Unadjusted p-values		0.5980	0.0063	0.0471	0.0748
PANSS aggression/hostility					
LS Means	-1.8	-3.0	-4.1	-3.8	-3.2
Difference from placebo (SE)		-1.1 (0.50)	-2.3 (0.50)	-2.0 (0.50)	-1.3 (0.50)
Unadjusted p-values		0.0239	< 0.0001	< 0.0001	0.0069

(Source: Clinical Study Report: Study D1444C00132; Table 30, page 112; Table 33, page 116; Table 34, page 117; Table 35, page 118; Table 11.2.2.5-3, page 255, Table 11.2.2.5, page 252)

3.1.1.4.4 Sponsor's Efficacy Exploratory and Sensitivity Analyses

When looking at changes over time, analyses at visits Day 14, 21, and 28 were carried out. Table 5 summarizes the findings. The sponsor concluded that the separation from placebo for doses SR 600mg and SR 800mg begin at visit Day 28 and continue to the end of the study.

Reviewer's notes: These results are for exploratory purposes only since the study was not designed to look at such specific visits and no control for multiple doses and multiple visits was done.

Table 5. PANSS Total Score, Change from baseline at Day 14, 21, 28, and 42 for Study 132; Sponsor's Results

	Placebo	SR 400mg	SR 600mg	SR 800mg	IR 400mg
Sample size (n)	115	111	111	117	119
Day 14					
Difference from placebo (SE)		-0.2 (2.06)	-0.9 (2.07)	-3.5 (2.05)	-0.7 (2.02)
Unadjusted p-values		0.9064	0.6536	0.0869	0.7257
Day 21					
Difference from placebo (SE)		-1.6 (2.27)	-2.5 (2.27)	-4.7 (2.25)	-1.4 (2.23)
Unadjusted p-values		0.4743	0.2765	0.0366	0.5407
Day 28					
Difference from placebo (SE)		-3.9 (2.50)	-8.0 (2.51)	-8.6 (2.49)	-3.8 (2.45)
Unadjusted p-values		0.1165	0.0016	0.0006	0.1269
Day 42					
Difference from placebo (SE)		-6.1 (2.78)	-12.1 (2.79)	-12.5 (2.76)	-7.8 (2.72)
Unadjusted p-values		0.0330	< 0.0001	< 0.0001	0.0045

(Source: Clinical Study Report: Study D1444C00132; Table 11.2.2.1-1, page 233-234)

To evaluate the sensitivity of the findings above, the sponsor performed an analysis based on observed cases using per-protocol population. The findings are summarized in Table 6 below.

Table 6. Sensitivity Analysis (observed cases, per-protocol population) for Study 132; Sponsor's Results

	Placebo	SR 400mg	SR 600mg	SR 800mg	IR 400mg
Sample size (n)	70	76	81	84	82
LS Means	-23.3	-30.9	-34.5	-37.1	-33.0
Difference from placebo (SE)		-7.6 (3.10)	-11.3 (3.07)	-13.8 (3.06)	-9.8 (3.03)
Unadjusted p-values		0.0140	0.0003	< 0.0001	0.0014
Adjusted p-values (*)		0.0140	0.0003	< 0.0001	Not done

(*) Multiple comparisons were adjusted by Hommel's procedure.
Source: Clinical Study Report: Study D1444C00132; Table 11.2.1-4, page 232

In addition, an analysis based on observed cases for the modified intent-to-treat (MITT) population was also conducted. The results are summarized in Table 7.

Table 7. Sensitivity Analysis (observed cases, MITT population) for Study 132; Sponsor's Results

	Placebo	SR 400mg	SR 600mg	SR 800mg	IR 400mg
Sample size (n)	76	82	91	90	90
LS Means	-23.1	-31.1	-35.1	-37.7	-33.1
Difference from placebo (SE)		-8.1 (2.90)	-12.0 (2.86)	-14.6 (2.87)	-10.0 (2.83)
Unadjusted p-values		0.0057	<0.0001	< 0.0001	0.0005
Adjusted p-values (*)		0.0057	<0.0001	< 0.0001	Not done

(*) Multiple comparisons were adjusted by Hommel's procedure.
Source: Clinical Study Report: Study D1444C00132; Table 11.2.1-3, page 231

Both analyses showed that doses SR 400mg, SR 600mg, and SR 800mg were statistically significantly different from placebo in the treatment of schizophrenia. The magnitudes and the direction of the differences were consistent with the primary analysis.

3.1.1.4.5 Statistical Reviewer's Results and Comments

This reviewer confirmed the sponsor's findings for the primary endpoint. The findings on secondary endpoints, in general, support the primary finding. However, since there were no adjustments for multiple doses and multiple endpoints, the findings on secondary endpoints can only be considered exploratory.

An analysis using a mixed model for repeated measures (MMRM) was carried out to assess the sensitivity of the LOCF method. The MMRM utilized all data post baseline with baseline PANSS total score as a fixed covariate, treatment groups and visits as fixed factors, a fixed treatment by visit interaction, and centers as random factors. The model used an unstructured within subjects covariance matrix with the Satterthwaite denominator degrees of freedom. The restricted maximum likelihood method was used for variance components estimation. The results are presented in Table 8. The results were consistent with the findings in the ANCOVA (LOCF) model.

Table 8. MMRM Analysis for Study 132: PANSS total score, change from baseline at Day 42; Reviewer's Results

	Placebo	SR 400mg	SR 600mg	SR 800mg	IR 400mg
Sample size (n)	115	111	111	117	119
LS Means	-19.3	-26.9	-32.3	-34.8	-29.3
Difference from placebo (SE)		-7.7 (2.94)	-13.1 (2.89)	-15.5 (2.90)	-10.0 (2.87)
Unadjusted p-values		0.0095	< 0.0001	< 0.0001	0.0005
Adjusted p-values (*)		0.0095	< 0.0001	< 0.0001	Not done

(*) Multiple comparisons were adjusted by Hommel's procedure.

When the Statistical Analysis Plan for this study was submitted, the Agency has a concern about the sponsor-proposed Hommel's procedure for failing to control the overall Type I error rate. It was suggested the Holm's method instead. Because the unadjusted p-values were very small, either the Holm's or the Hommel's procedure would yield the same conclusions.

The handling of missing item scores did not affect the outcome. The PANSS total score consists of 30 items rated on a seven-point scale. The sponsor proposed if three or fewer items were missing, then the total score will be calculated as

$$30 \times \frac{\text{sum of all non missing items in that assessment}}{\text{number of non missing items}}.$$

If more than three items were missing, then the total score will be set to missing. In this study, the reviewer found that if one item score was missing, all other items were also missing.

3.1.2 Study 5077IL/0041

3.1.2.1 Objectives

Primary: To demonstrate the efficacy of quetiapine SR tablets compared with placebo in the treatment of patients with schizophrenia.

Secondary:
- To assess the tolerability and safety of quetiapine SR tablets administered once daily as compared with placebo in patients with schizophrenia;
- To assess the similarity of the safety and efficacy profiles of quetiapine SR tablets and marketed quetiapine IR tablets.

3.1.2.2 Study Design

This was a 6-week, multi-center, randomized, double-blind, placebo-controlled, parallel-group study comprised a screening visit and a 42-day treatment period. Subjects were from 49 centers in the United States and four Canadian centers. All patients were hospitalized for the first 10 days of treatment. After baseline assessments on Day 1, patients were randomized to 1 of 6 possible treatments: quetiapine SR at 300, 600, or 800 mg daily, quetiapine IR at 300 or 600 mg daily, or placebo. All subjects assigned to quetiapine SR started at 300 mg/day. Doses were escalated as in Figure 3. Efficacy and safety were assessed on Days 4, 8, 15, 28, and 42 or last visit before discontinuation.

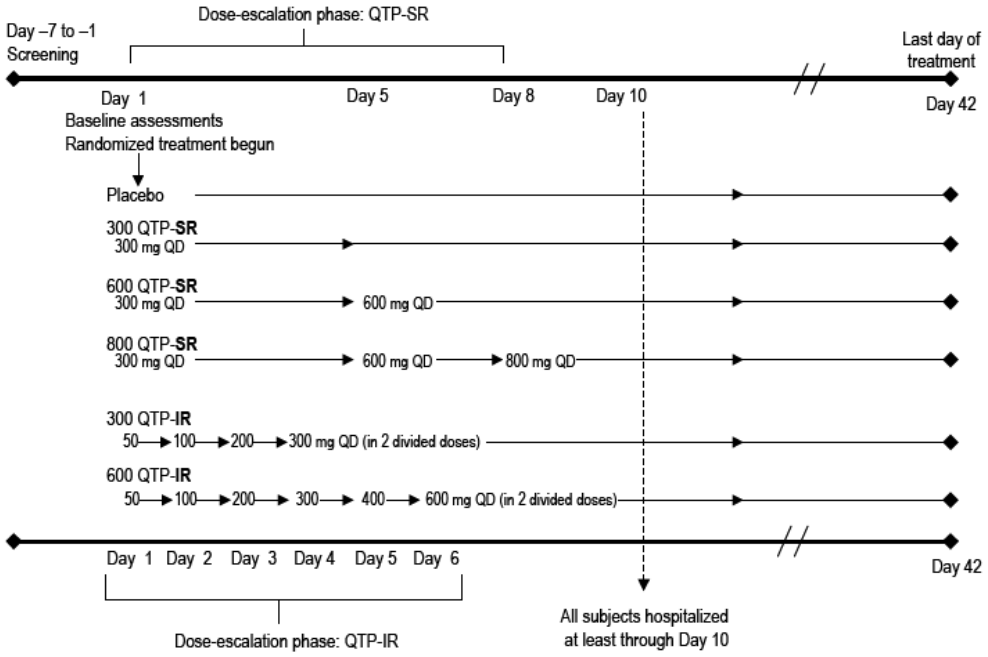

Figure 3. Study 041 flow chart

(Source: Clinical Study Report: Study 5077IL/0041; Figure 1, page 25)

Subjects were enrolled from March 2001 to May 2002. Patients, aged 18 to 65 years and hospitalized for ≤ 1 month with symptoms of schizophrenia, were eligible to enroll if they had a Positive and Negative Syndrome Scale (PANSS) total score of ≥ 60 on screening and Day 1, a score of ≥ 4 on at least one of the pre-designated PANSS

individual items (delusions, conceptual disorganization, hallucinatory behavior, and suspiciousness/persecution) on Day 1, and a score of ≥ 4 on the Clinical Global Impression (CGI) Severity of Illness item, with evidence of worsening in the 3 weeks before enrollment. Outpatients who otherwise qualified were eligible for enrollment as long as they agreed to be hospitalized for the first 10 days of treatment.

It was determined that 80 evaluable patients per treatment group were sufficient for 90% power, assuming a mean (SD) difference of 15.5 (25.8) points between active treatment and placebo for a change from baseline PANSS total score at Day 42.

3.1.2.3 Efficacy Endpoints and Analyses

Primary endpoint and analysis: change in PANSS total score from baseline to Day 42. The change in PANSS total score will be evaluated using an analysis of covariance (ANCOVA) model that includes terms for center, treatment, and baseline score. Multiplicity will be controlled by the Hochberg procedure.

Secondary endpoints and analyses: Positive, Negative, General Psychopathology subscale scores, activation factor score, and depression item score at each visit and changes from baseline at each post-baseline visit; change from baseline PANSS total score at all subsequent visits; PANSS response at Day 42, i.e., ≥ 30% decrease in PANSS total score from baseline; CGI Severity of Illness score and change from baseline at each visit; and CGI Global Improvement score at each visit after baseline. Continuous secondary endpoints will be evaluated using the ANCOVA methods similar to the primary analysis (without adjusting for multiplicity). Categorical endpoints will be analyzed using the Cochran-Mantell-Haenszel chi-square test.

All statistical analyses use last-observation-carried-forward (LOCF) methods in the modified intent-to-treat population at a 5% significant level.

3.1.2.4 Efficacy Results

3.1.2.4.1 Study Population

Seven hundreds and thirty six (736) subjects from the United States and Canada were screened for the study. The randomized study population included 532 patients. Twelve were excluded because postbaseline scores were missing. The sponsors also excluded another 22 subjects from Center 43 due to an apparent investigator misrepresentation (falsify information on the investigator's licensure history). In sections 3.1.2.4.2 and 3.1.2.4.3, sponsor's results will be confirmed excluding Center 43. However, in section 3.1.2.4.4, the reviewer's results are presented including Center 43 to adhere to the Intent-To-Treat principle.

The patient disposition is summarized in Figure 4. Approximately sixty percent of subjects discontinued the study early. The main reason for patients to discontinue the study early was a lack of efficacy.

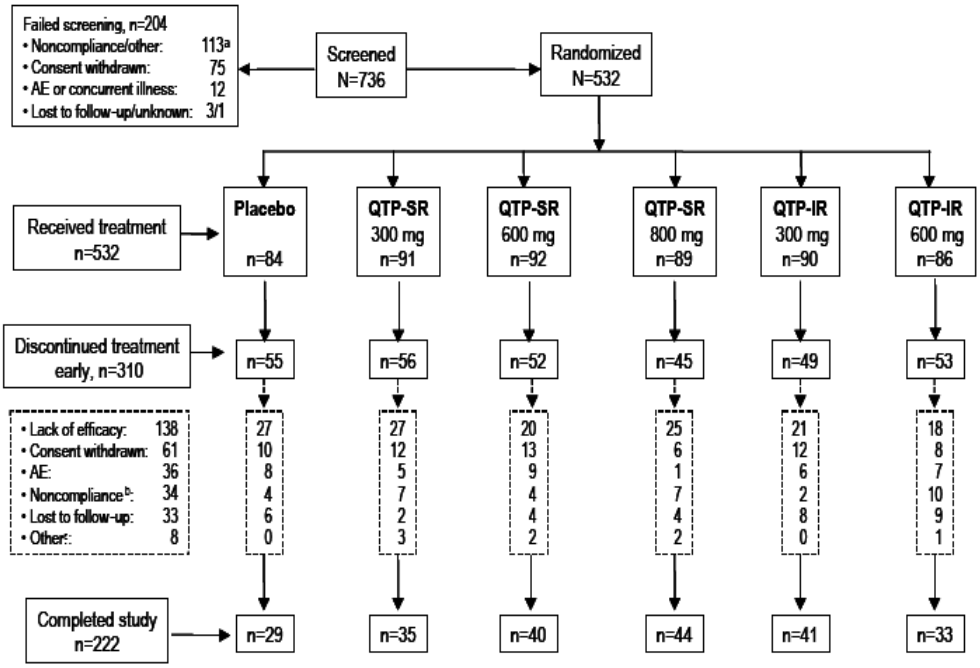

Figure 4. Patient disposition for study 041
(Source: Clinical Study Report: Study 5077IL/0041; Figure 2, page 71)

Table 9 below summarizes key demographic and baseline disease characteristics of the modified intent-to-treat sample. Female subjects accounted for about one-fourth of the total sample. The age ranged from 18 to 64 years with an average age of 39 years. The majority of subjects were Caucasian (50%). Next were the black patients that accounted for 37% of the sample. On average, the sample was in the overweight BMI category (BMI 25 – 29.9, National Institute of Health). The baseline characteristics appeared balanced across treatment groups.

Table 9. Demographic and Baseline Disease Characteristics in the MITT Sample for Study 041

	Placebo (N=78)	SR 300mg (N=83)	SR 600mg (N=87)	SR 800mg (N=85)	IR 300mg (N=85)	IR 600mg (N=80)	Total (N=498)
Female (%)	23.1	28.9	29.9	18.8	24.7	26.3	25.3
Age(*)							
mean (S.D.)	38.4 (10.1)	39.1 (11.2)	38.9 (9.3)	37.8 (10.5)	39.8 (10.6)	40.6 (9.7)	39.1 (10.2)
Min. - Max.	19 - 64	18 - 64	19 - 61	20 - 59	19 - 62	21 - 60	18 - 64
Race (% of patients)							
White	43.6	54.2	50.6	55.3	49.4	45.0	49.8
Black	39.7	32.5	39.1	34.1	38.9	37.5	37.0
Asian	1.3	3.6	0.0	0.0	1.2	2.5	1.4
Hispanic	11.5	8.4	9.2	10.6	10.6	13.8	10.6
Other	3.9	1.2	1.2	0.0	0.0	1.3	1.2
BMI (*)							
Mean (S.D.)	29.4 (7.6)	28.2 (7.5)	31.1 (9.4)	30.0 (7.6)	29.0 (6.6)	29.5 (6.3)	29.6 (7.6)
Min. - Max.	18.6 - 52.0	16.8 - 55.3	18.0 - 57.9	19.3 - 54.4	17.9 - 53.6	18.7 -43.9	16.8 - 57.9
PANSS total (*)							
Mean (S.D.)	91.1 (16.3)	91.5 (19.2)	92.4 (17.2)	89.0 (14.9)	89.5 (15.7)	88.6 (17.3)	90.4 (16.8)
Min. - Max.	60 - 149	60 - 149	60 - 149	60 - 129	60 - 150	60 - 142	60 - 150

(*) *Characteristics at baseline*

3.1.2.4.2 Sponsor's Efficacy Results for Primary Endpoint

The primary efficacy measure was the difference from baseline and Day 42 (LOCF) in PANSS total score. The sponsor's primary efficacy result is presented in Table 10. Multiple comparisons were controlled by Hochberg (1988) method. In the current analysis, only dose SR 600mg was statistically significantly different from placebo at .05 level.

Table 10. Primary Efficacy Analysis for Study 041: PANSS total score, change from baseline at Day 42; Sponsor's Results

	Placebo	SR 300mg	SR 600mg	SR 800mg	IR 300mg	IR 600mg
Sample size (n)	78	83	87	85	85	80
LS Means	-5.2	-5.0	-13.0	-11.2	-9.4	-7.0
Difference from placebo (SE)		0.19 (3.09)	-7.82 (3.06)	-5.98 (3.08)	-4.23 (3.07)	-1.78 (3.12)
Unadjusted p-values		0.952	0.011	0.052	0.169	0.569
Adjusted p-values (*)		0.952	0.033	0.104	Not done	Not done

(*) Multiple comparisons were adjusted by Hochberg's procedure.
(Source: Clinical Study Report: Study 5077IL/0041; Table 27, page 89)

3.1.2.4.3 Sponsor's Efficacy Results for Secondary Endpoints

PANSS response rate at Day 42: Response rate was defined as a decrease from baseline of ≥ 30% in PANSS total score. The response rate analysis is presented in Table 11. None of the doses was statistically significantly different from placebo as indicated by the confidence intervals of the odds ratios.

CGI Global Improvement (CGI-I) score at Day 42: The analysis of the CGI Global Improvement score at Day 42 is also presented in Table 11. Doses SR 600mg and SR 800mg showed improvement over placebo as indicated by the corresponding confidence intervals of the odds ratios.

Table 11. PANSS response rate, CGI Global Improvement at Day 42 for Study 041; Sponsor's Results

	Placebo	SR 300mg	SR 600mg	SR 800mg	IR 300	IR 600mg
Sample size (n)	78	83	87	85	85	80
PANSS Response rate						
Patients responding: n (%)	11 (14.1)	10 (12.1)	21 (24.1)	20 (23.5)	16 (18.8)	11 (13.8)
Odds ratio (active vs. placebo) (CI)		0.8 (0.33-2.09)	1.9 (0.87-4.33)	1.9 (0.83-4.22)	1.4 (0.61-3.27)	1.0 (0.39-2.39)
CGI-I						
Patients responding: n (%)	15 (19.2)	25 (30.1)	29 (33.3)	30 (35.3)	36 (42.4)	21 (26.3)
Odds ratio (active vs. placebo) (CI)		1.8 (0.87-3.77)	2.1 (1.02-4.31)	2.3 (1.12-4.70)	3.0 (1.52-6.27)	1.5 (0.70-3.17)

(Source: Clinical Study Report: Study 5077IL/0041; Table 28, page 92; Table 30, page 97. The reviewer provides odds ratios and their confidence intervals. Confidence intervals are not adjusted for multiple doses)

CGI Severity of Illness score (CGI-S), change from baseline at Day 42: Results of CGI Severity of Illness score analysis is summarized in Table 12. All doses in CGI-Severity of Illness score did not separate from placebo at Day 42.

PANSS Positive Subscale Score, change from baseline at Day 42: The analysis of change from baseline at Day 42 in PANSS Positive subscale score did not result in any separation between treatments and placebo. The point estimates showed improvement, but did not reach the statistically significant level.

PANSS Negative Subscale Score, change from baseline at Day 42: The analysis of change from baseline at Day 42 in PANSS Negative subscale score did not result in any separation between treatments and placebo. The point estimates showed improvement for doses SR 600mg and SR 800mg, but did not reach the statistically significant level.

Table 12. Selective Secondary Variables, change from baseline at Day 42 for Study 041; Sponsor's Results

	Placebo	SR 300mg	SR 600mg	SR 800mg	IR 300mg	IR 600mg
Sample size (n)	78	83	87	85	85	80
CGI-S						
LS Means	-0.4	-0.5	-0.7	-0.7	-0.6	-0.5
Difference from placebo (SE)		-0.8 (0.17)	-0.2 (0.17)	-0.3 (0.17)	-0.2 (0.17)	-0.1 (0.17)
Unadjusted p-values		0.6465	0.1559	0.1326	0.3222	0.5972
PANSS Positive						
LS Means	-1.8	-2.1	-3.4	-3.1	-2.6	-2.3
Difference from placebo (SE)		-0.4 (0.97)	-1.7 (0.96)	-1.4 (0.96)	-0.9 (0.96)	-0.6 (0.97)
Unadjusted p-values		0.6915	0.0831	0.1574	0.3733	0.5563
PANSS Negative						
LS Means	-1.3	-1.0	-2.9	-2.8	-2.1	-1.2
Difference from placebo (SE)		0.3 (0.88)	-1.6 (0.87)	-1.5 (0.88)	-0.8 (0.88)	0.03 (0.89)
Unadjusted p-values		0.7752	0.0704	0.0908	0.3808	0.9676

(Source: Clinical Study Report: Study 5077IL/0041; Table 29, page 95; Table 11.2.1.2.7, Appendix)

Change in PANSS Total Score from baseline at Day 14, 21, 28 and 42 visits: Changes in PANSS Total score from baseline over time are presented in Table 13. Dose SR 600mg seemed to showed efficacy early (Day 15) and continued until the end of the study. Dose SR 800mg appeared to showed efficacy early (Day 15), but the efficacy did not retain at subsequent visits.

Table 13. PANSS Total Score, Change from baseline at Day 15, 28, and 42 for Study 041; Sponsor's Results

	Placebo	SR 300mg	SR 600mg	SR 800mg	IR 300mg	IR 600mg
Sample size (n)	78	83	87	85	85	80
Day 15						
Difference from placebo (SE)		-1.7 (2.70)	-7.9 (2.68)	-5.9 (2.70)	-5.8 (2.70)	-3.6 (2.73)
Unadjusted p-values		0.5200	0.0034	0.0300	0.0304	0.1913
Day 28						
Difference from placebo (SE)		0.5 (2.98)	-6.6 (2.95)	-5.19 (2.97)	-3.72 (2.97)	-1.17 (3.01)
Unadjusted p-values		0.8585	0.0256	0.0817	0.2106	0.6991
Day 42						
Difference from placebo (SE)		0.2 (3.09)	-7.8 (3.06)	-6.0 (3.08)	-4.2 (3.07)	-1.8 (3.12)
Unadjusted p-values		0.9519	0.0109	0.0524	0.1694	0.5686

(Source: Clinical Study Report: Study 5077IL/0041; Table 11.2.1.2.7, Appendix)

Reviewer's notes: These secondary analyses did not control for multiple doses and multiple endpoints. The p-values and confidence intervals were not adjusted for multiplicity. Therefore, the secondary findings can only be considered exploratory.

3.1.2.4.4 Statistical Reviewer's Results and Comments

This reviewer confirms the sponsor's finding on the primary endpoint. The secondary endpoints, in general, did not provide additional evidence of benefits to the primary endpoint. However, since no adjustment for multiple endpoints and multiple doses, secondary analyses can only be considered exploratory.

As mentioned before, the sponsor's analysis excluded 22 subjects from Center 43 due to the investigator misrepresentation at that site. In this section, the intent-to-treat analysis including these 22 subjects will be presented. The results are relatively similar to the sponsor's findings as presented in Table 14. Only dose SR 600mg was statistically significantly different from placebo at .05 level.

Table 14. Primary Efficacy Analysis for Study 041: PANSS total score, change from baseline at Day 42; Reviewer's Results

	Placebo	SR 300mg	SR 600mg	SR 800mg	IR 300mg	IR 600mg
Sample size (n)	82	87	91	89	88	83
LS Means	-5.9	-5.7	-13.5	-11.4	-9.4	-7.5
Difference from placebo (SE)		0.18 (3.00)	-7.56 (2.97)	-5.48 (2.99)	-3.52 (2.99)	-1.55 (3.04)
Unadjusted p-values		0.951	0.011	0.068	0.240	0.610
Adjusted p-values(*)		0.951	0.033	0.136	Not done	Not done

(*) Multiple comparisons were adjusted by Hochberg's procedure.

Additional analyses using the observed cases in the per-protocol population and modified intent-to-treat population did not reveal any additional findings compared to the primary analysis.

3.2 Evaluation of Safety

The evaluation of safety was not performed and reported here. Please refer to the clinical review for safety evaluation and report.

4. FINDINGS IN SPECIAL/SUBGROUP POPULATIONS

4.1 Gender, Race and Age

4.1.1 Study D1444C00132

4.1.1.1 Gender

This study is more balanced between male and female subjects. The analysis of primary outcome stratified by gender suggested that the treatment effects were consistent across gender.

Table 15. Primary Efficacy Analysis by Gender for Study 132; Sponsor's Results

	Placebo	SR 400mg	SR 600mg	SR 800mg	IR 400mg
Male					
Sample size (n)	67	78	61	70	69
LS Means	-19.2	-23.0	-31.5	-28.2	-29.7
Difference from placebo (SE)		-3.8 (3.68)	-12.3 (3.91)	-9.1 (3.79)	-10.6 (3.77)
Unadjusted p-values		0.3029	0.0018	0.0174	0.0053
Female					
Sample size (n)	48	33	50	47	50
LS Means	-17.9	-27.1	-29.7	-34.2	-21.4
Difference from placebo (SE)		-9.2 (4.41)	-11.7 (3.93)	-16.2 (4.01)	-3.5 (3.92)
Unadjusted p-values		0.0389	0.0032	< 0.0001	0.3742

(Source: Summary of Clinical Efficacy; Table EA-99, page 201)

4.1.1.2 Race

The analysis stratified by race suggested that the treatment effects were consistent for white and oriental. Small sample sizes for black/other patients hindered the statistical evaluation.

Table 16. Primary Efficacy Analysis by Race for Study 132; Sponsor's Results

	Placebo	SR 400mg	SR 600mg	SR 800mg	IR 400mg
White					
Sample size (n)	68	63	66	71	71
LS Means	-19.3	-23.8	-28.3	-30.0	-24.8
Difference from placebo (SE)		-4.5 (3.29)	-9.0 (3.25)	-10.7 (3.22)	-5.6 (3.18)
Unadjusted p-values		0.1750	0.0060	0.0010	0.0815
Black/Other					
Sample size (n)	5	5	5	5	7
LS Means	-32.7	-31.2	-31.7	-34.7	-33.3
Difference from placebo (SE)		1.6 (12.06)	1.0 (12.34)	-1.9 (12.07)	-0.6 (11.18)
Unadjusted p-values		0.8977	0.9367	0.8751	0.9599
Oriental					
Sample size (n)	42	43	40	41	41
LS Means	-15.6	-24.9	-33.9	-32.0	-27.5
Difference from placebo (SE)		-9.4 (5.26)	-18.4 (5.36)	-16.4 (5.33)	-11.9 (5.31)
Unadjusted p-values		0.0768	0.0007	0.0024	0.0263

(Source: Summary of Clinical Efficacy; Table EA-98, page 199)

4.1.1.3 Age

Since subjects in this study were between the age of 18 and 65, analyses stratified by age were omitted from this review.

4.1.2 Study 5077IL/0041

4.1.2.1 Gender

The majority of subjects in this study were male. The analysis stratified by gender did not reveal any remarkable difference than the overall analysis.

Table 17. Primary Efficacy Analysis by Gender for Study 041; Sponsor's Results

	Placebo	SR 300mg	SR 600mg	SR 800mg	IR 300mg	IR 600mg
Male						
Sample size (n)	60	59	61	69	64	59
LS Means	-5.8	-2.3	-10.4	-11.1	-7.2	-6.8
Difference from placebo (SE)		3.6 (3.58)	-4.6 (3.56)	-5.3 (3.45)	-1.4 (3.51)	-1.0 (3.59)
Unadjusted p-values		0.3219	0.1974	0.1267	0.7001	0.7776
Female						
Sample size (n)	18	24	26	16	21	21
LS Means	-3.9	-12.0	-19.5	-12.3	-16.9	-7.9
Difference from placebo (SE)		-8.1 (6.09)	-15.6 (5.99)	-8.4 (6.81)	-13.0 (6.32)	-4.0 (6.30)
Unadjusted p-values		0.1881	0.0109	0.2202	0.0421	0.5258

(Source: Summary of Clinical Efficacy; Table EA-109, page 212)

4.1.2.2 Race

The analysis stratified by race is presented in Table 18. Black patients showed a numerical larger difference from placebo group than white patients for the three doses under investigation.

Table 18. Primary Efficacy Analysis by Race for Study 041; Sponsor's Results

	Placebo	SR 300mg	SR 600mg	SR 800mg	IR 300mg	IR 600mg
White						
Sample size (n)	34	45	44	47	42	36
LS Means	-7.0	-1.7	-12.1	-10.6	-10.3	-11.1
Difference from placebo (SE)		5.3 (4.5)	-5.0 (4.5)	-3.6 (4.4)	-3.3 (4.6)	-4.1 (4.8)
Unadjusted p-values		0.2418	0.2656	0.4148	0.4675	0.3885
Black						
Sample size (n)	31	27	34	29	33	30
LS Means	-4.0	-7.0	-14.5	-14.1	-8.9	-4.3
Difference from placebo (SE)		-3.1 (5.03)	-10.5 (4.75)	-10.1 (4.95)	-4.9 (4.8)	-0.4 (4.9)
Unadjusted p-values		0.5430	0.0284	0.0435	0.3050	0.9424
Other						
Sample size (n)	13	11	9	9	10	14
LS Means	-7.6	-13.2	-19.1	-2.2	-8.5	-3.7
Difference from placebo (SE)		-5.7 (8.17)	-11.6 (8.48)	5.4 (8.58)	-1.0 (8.30)	3.9 (7.32)
Unadjusted p-values		0.4915	0.1800	0.5347	0.9071	0.5985

(Source: Summary of Clinical Efficacy; Table EA-108, page 210)

4.1.2.3 Age

Since subjects in this study were between 18 and 65 years old, analyses stratified by age were omitted from this review.

4.2 Other Special/Subgroup Populations

4.2.1 Study D1444C00132

4.2.1.1 Baseline severity of illness

Numerical evidence suggested that the treatment effects were consistent according to the severity of illness at baseline.

Table 19. Primary Efficacy Analysis by Severity of Illness at Baseline for Study 132; Reviewer's Results

	Placebo	SR 400mg	SR 600mg	SR 800mg	IR 400mg
Moderately ill (CGI-S = 4)					
Sample size (n)	30	31	29	25	28
LS Means	-12.8	-22.4	-27.7	-33.7	-31.1
Difference from placebo (SE)		-9.6 (5.32)	-14.9 (5.45)	-20.9 (5.63)	-18.3 (5.49)
Unadjusted p-values		0.0738	0.0072	0.0003	0.0012
Markedly ill (CGI-S ≥ 5)					
Sample size (n)	85	80	82	92	91
LS Means	-19.9	-25.2	-31.5	-30.1	-24.9
Difference from placebo (SE)		-5.3 (3.29)	-11.6 (3.27)	-10.3 (3.20)	-5.0 (3.18)
Unadjusted p-values		0.1052	0.0005	0.0014	0.1174

4.2.1.2 Baseline BMI

For patients with normal BMI (BMI < 25), numerical evidence suggested that all three doses under investigation showed improvements over placebo. On the other hand, for patients who were overweight (BMI ≥ 25) at baseline, the magnitude of the observed treatment effects over placebo were generally smaller.

Table 20. Primary Efficacy Analysis by Baseline BMI for Study 132; Reviewer's Results

	Placebo	SR 400mg	SR 600mg	SR 800mg	IR 400mg
BMI < 25					
Sample size (n)	82	82	78	80	79
LS Means	-17.8	-24.5	-31.7	-31.4	-25.4
Difference from placebo (SE)		-6.7 (3.37)	-13.9 (3.42)	-13.6 (3.40)	-7.6 (3.38)
Unadjusted p-values		0.0475	< 0.0001	< 0.0001	0.0258
BMI ≥ 25					
Sample size (n)	33	29	33	37	40
LS Means	-23.6	-26.9	-30.1	-30.7	-29.8
Difference from placebo (SE)		-3.2 (5.02)	-6.5 (4.93)	-7.1 (4.80)	-6.2 (4.72)
Unadjusted p-values		0.5213	0.1892	0.1441	0.1940

4.2.2 Study 5077IL/0041

4.2.2.1 Baseline severity of illness

Moderately ill patients showed a numerical larger difference over the placebo group than markedly ill patients.

Table 21. Primary Efficacy Analysis by Severity of Illness at Baseline for Study 041; Reviewer's Results

	Placebo	SR 300mg	SR 600mg	SR 800mg	IR 300mg	IR 600mg
Moderately ill (CGI-S = 4)						
Sample size (n)	31	29	37	34	32	31
LS Means	-1.5	-1.2	-10.9	-11.9	-9.3	-3.7
Difference from placebo (SE)		0.3 (4.40)	-9.4 (4.16)	-10.4 (4.24)	-7.7 (4.28)	-2.2 (4.35)
Unadjusted p-values		0.9470	0.0254	0.0157	0.0724	0.6099
Markedly ill (CGI-S ≥ 5)						
Sample size (n)	47	54	50	51	53	49
LS Means	-8.0	-7.3	-14.5	-10.8	-9.8	-9.0
Difference from placebo (SE)		0.7 (4.27)	-6.6 (4.36)	-2.7 (4.35)	-1.8 (4.29)	-1.0 (4.38)
Unadjusted p-values		0.8745	0.1337	0.5352	0.6762	0.8142

4.2.2.2 Baseline BMI

The analysis stratified by baseline BMI did not reveal any remarkable heterogeneity across BMI categories.

Table 22. Primary Efficacy Analysis by Baseline BMI for Study 041; Reviewer's Results

	Placebo	SR 300mg	SR 600mg	SR 800mg	IR 300mg	IR 600mg
BMI < 25						
Sample size (n)	29	33	23	24	24	24
LS Means	-6.0	-4.3	-10.6	-14.3	-6.2	-9.9
Difference from placebo (SE)		1.7 (5.03)	-4.6 (5.57)	-8.3 (5.48)	-0.20 (5.46)	-4.0 (5.46)
Unadjusted p-values		0.7314	0.4079	0.1322	0.9704	0.4709
BMI ≥ 25						
Sample size (n)	49	50	64	61	61	56
LS Means	-5.0	-5.6	-14.2	-9.9	-10.9	-6.0
Difference from placebo (SE)		-0.6 (4.00)	-9.2 (3.79)	-4.9 (3.82)	-5.8 (3.82)	-1.0 (3.90)
Unadjusted p-values		0.8816	0.0155	0.2013	0.1282	0.7971

5. SUMMARY AND CONCLUSIONS

5.1 Statistical Issues and Collective Evidence

The sponsor submitted three phase III efficacy studies to demonstrate the superior efficacy of quetiapine SR over placebo. The sample sizes collected were adequate for the planned effect size to evaluate the efficacy of the doses investigated. Study 133 conducted in the United States failed to show efficacy in all doses considered. Study 132 conducted at non-U.S. sites provided strong evidence that doses 400mg SR, 600mg SR, and 800mg SR were effective in the treatment of schizophrenia as measured by the change from the baseline to Day 42 in PANSS total score. The findings of study 132 at doses 600mg SR and 800mg SR were consistent across age, gender, and race subgroups. The dropout in study 132 appeared not to affect the final results. Study 041, conducted in the United States and Canada, provided additional evidence for dose 600 mg SR. However, study 041 failed to show efficacy for the active comparators (immediate release formulation), it is therefore considered a failed study.

5.2 Conclusions and Recommendations

The results of the non-U.S., multicenter, randomized, double-blind, double dummy, placebo-controlled study 132 suggest that quetiapine sustained release at doses 400mg daily, 600mg daily, and 800mg daily are effective in the treatment of schizophrenia. The U.S. study 133 failed to show efficacy for all doses under consideration. The U.S. and Canadian study 041 provided some evidence of effectiveness at dose 600mg. However, study 041 was also considered a failed study since the active comparators failed to separate from placebo.

The results for the non-U.S. study and U.S. studies appear inconsistent. It is not clear what contributed to the inconsistency although several possible explanations were thought of, such as larger dropout rates in U.S. studies, larger observed placebo effect in the non-U.S. study, unevenly distributed baseline disease status across studies, inconsistent observed treatment effects on normal BMI group across three studies, cultural differences in reporting systems, diagnostic differences in evaluating symptoms, differences in clinical standards and practices, reliability/validity of instruments across sites/countries, impact of instrument translation, etc. Thus, it is uncertain whether the results from the non-U.S. study can be generalized to the U.S. population.

6. APPENDIX

Primary Efficacy Analysis for Study 132: PANSS total score, change from baseline at Day 42; By Geographical Region

	Placebo	SR 400mg	SR 600mg	SR 800mg	IR 400mg
Europe					
Sample size (n)	59	56	56	60	62
LS Means	-19.7	-23.1	-27.6	-27.3	-24.4
Difference from placebo (SE)		-3.4 (3.5)	-7.9 (3.5)	-7.6 (3.5)	-4.7 (3.4)
Unadjusted p-values		0.3322	0.0260	0.0304	0.1707
Asia					
Sample size (n)	50	50	49	50	50
LS Means	-15.9	-25.6	-33.8	-34.7	-27.7
Difference from placebo (SE)		-9.6 (4.7)	-17.8 (4.7)	-18.7 (4.7)	-11.7 (4.7)
Unadjusted p-values		0.0407	0.0002	<0.0001	0.0126

(Source: Reviewer's Results)

This is a representation of an electronic record that was signed electronically and this page is the manifestation of the electronic signature.

/s/

Phillip Dinh
4/2/2007 02:14:31 PM
BIOMETRICS
Thanks to Dr. Yeh-Fong Chen for the mentorship during the review of this NDA.

Peiling Yang
4/2/2007 02:18:12 PM
BIOMETRICS

James Hung
4/2/2007 02:20:56 PM
BIOMETRICS