CENTER FOR DRUG EVALUATION AND RESEARCH

APPLICATION NUMBER:

205433Orig1s000

<u>LABELING</u>

HIGHLIGHTS OF PRESCRIBING INFORMATION
These highlights do not include all the information needed to use KITABIS™ PAK safely and effectively. See full prescribing information for KITABIS PAK.

KITABIS PAK (tobramycin inhalation solution), for oral inhalation use
Initial U.S. Approval: 1975

----------INDICATIONS AND USAGE----------
KITABIS PAK contains tobramycin, an aminoglycoside antibacterial drug indicated for the management of cystic fibrosis *in adults and pediatric* patients *6 years of age and older* with *Pseudomonas aeruginosa* (1).

----------DOSAGE AND ADMINISTRATION----------
- KITABIS PAK is a co-packaging of tobramycin inhalation solution with a PARI LC PLUS® Reusable Nebulizer (2.1).
- Administer tobramycin inhalation solution as one single–use ampule (300 mg/5 mL) twice a day by oral inhalation in alternating periods of 28 days on drug, followed by 28 days off drug (2.1).
- Dosage is not adjusted by weight (2.1).
- Take doses as close to 12 hours apart as possible; but not less than 6 hours apart (2.1)
- Administer each 300 mg dose using the PARI LC PLUS Reusable Nebulizer and DeVilbiss® Pulmo-Aide® compressor (2.2)

----------DOSAGE FORMS AND STRENGTHS----------
- Inhalation solution: 300 mg in a single-use 5 mL ampule (3)

----------CONTRAINDICATIONS----------
- Known hypersensitivity to any aminoglycoside (4).

----------WARNINGS AND PRECAUTIONS----------

- *Bronchospasm*: Can occur with inhalation of tobramycin inhalation solution. Treat as medically appropriate, if it occurs (5.1).
- *Ototoxicity* Tinnitus and hearing loss have been reported in patients receiving tobramycin inhalation solution. . If noted, manage as medically appropriate, including potentially discontinuing tobramycin inhalation solution (5.2).
- *Nephrotoxicity:* Has been associated with aminoglycosides as a class. If nephrotoxicity develops, manage the patient as medically appropriate, including potentially discontinuing tobramycin inhalation solution(5.3).
- *Neuromuscular Disorders:* Aminoglycosides may aggravate muscle weakness because of a potential curare-like effect on neuromuscular function. If neuromuscular blockade occurs, it may be reversed by the administration of calcium salts but mechanical assistance may be necessary. (5.4).

----------ADVERSE REACTIONS----------
The most common adverse reactions (> 5%) in patients treated with tobramycin inhalation solution were cough, pharyngitis, and increased sputum (6.1).

To report SUSPECTED ADVERSE REACTIONS, contact PARI at 1-844 KITABIS (1-844-548-2247) or FDA at 1-800-FDA-1088 or www.fda.gov/medwatch

----------DRUG INTERACTIONS----------
- Concurrent and/or sequential use with other drugs with neurotoxic, nephrotoxic or ototoxic potential should be avoided (7.1).
- Concomitant administration with ethacrynic acid, furosemide, urea, or intravenous mannitol is not recommended due to possible enhancement of aminoglycoside toxicity (7.2).

See 17 for PATIENT COUNSELING INFORMATION and FDA-approved patient labeling

Revised: 11/**2014**

FULL PRESCRIBING INFORMATION: CONTENTS*

1 INDICATIONS AND USAGE
2 DOSAGE AND ADMINISTRATION
2.1 **Dosing Information**
2.2 Administration of Tobramycin Inhalation Solution
3 DOSAGE FORMS AND STRENGTHS
4 CONTRAINDICATIONS
5 WARNINGS AND PRECAUTIONS
5.1 Bronchospasm
5.2 Ototoxicity
5.3 Nephrotoxicity
5.4 Neuromuscular Disorders
5.5 Embryo-Fetal Toxicity
5.6 Concomitant Use of Systemic Aminoglycosides
6 ADVERSE REACTIONS
6.1 Clinical Trials Experience
6.2 Postmarketing Experience
7 DRUG INTERACTIONS
7.1 Drugs with Neurotoxic, Nephrotoxic or Ototoxic Potential
7.2 Diuretics
8 USE IN SPECIFIC POPULATIONS
8.1 Pregnancy
8.3 Nursing Mothers
8.4 Pediatric Use
8.5 Geriatric Use
10 OVERDOSAGE
11 DESCRIPTION
12 CLINICAL PHARMACOLOGY
12.1 Mechanism of Action
12.3 Pharmacokinetics
12.4 Microbiology
13 NONCLINICAL TOXICOLOGY
13.1 Carcinogenesis, Mutagenesis, Impairment of Fertility
14 CLINICAL STUDIES
15 REFERENCES
16 HOW SUPPLIED/STORAGE AND HANDLING
16.1 How Supplied
16.2 Storage
17 PATIENT COUNSELING INFORMATION

*Sections or subsections omitted from the full prescribing information are not listed

FULL PRESCRIBING INFORMATION

1. INDICATIONS AND USAGE

KITABIS PAK (co-packaging of tobramycin inhalation solution and PARI LC PLUS Reusable Nebulizer) is indicated for the management of cystic fibrosis in adults and pediatric patients 6 years of age and older with *P. aeruginosa*. Safety and efficacy have not been demonstrated in patients under the age of 6 years, patients with FEV_1 <25% or >75% predicted, or patients colonized with *Burkholderia cepacia [see Clinical Studies (14)]*.

2. DOSAGE AND ADMINISTRATION

2.1 Dosing Information

- KITABIS PAK is a co-packaging of tobramycin inhalation solution ampules with a PARI LC PLUS Reusable Nebulizer. Administer as follows: One single-use ampule (300 mg /5 mL) of tobramycin inhalation solution twice a day by oral inhalation in alternating periods of 28 days on drug, followed by 28 days off drug.

- The 300 mg/5mL dose of tobramycin inhalation solution is the same for all patients regardless of age or weight.

- The doses should be taken as close to 12 hours apart as possible; they should not be taken less than 6 hours apart.

2.2 Administration of Tobramycin Inhalation Solution

Each dose of tobramycin inhalation solution is administered by oral inhalation using only the co-packaged PARI LC PLUS Reusable Nebulizer (Model No. 022B81-T) included in the KITABIS PAK, along with a DeVilbiss Pulmo-Aide air compressor (Model No. 5650D).

Tobramycin inhalation solution is *not* for subcutaneous, intravenous or intrathecal administration.

Prior to administration, read the *Patient Information*/*Instructions for Use* for KITABIS PAK for detailed information on how to use KITABIS PAK and follow the manufacturer's instructions for use and care of the DeVilbiss Pulmo-Aide air compressor.

The entire tobramycin inhalation solution treatment should take approximately 15 minutes to complete. Continue treatment until all the tobramycin inhalation solution has been delivered, and there is no longer any mist being produced.

Tobramycin inhalation solution should not be diluted or mixed with other drugs including dornase alfa in the nebulizer. Instruct patients on multiple therapies to take their medications prior to inhaling the tobramycin inhalation solution, or as directed by their physician.

Tobramycin inhalation solution should not be used if it is cloudy, if there are particles in the solution, or if it has been stored at room temperature for more than 28 days.

3. DOSAGE FORMS AND STRENGTH

Inhalation solution: 300 mg/5mL in a single-use ampule

4. CONTRAINDICATIONS

Tobramycin inhalation solution is contraindicated in patients with a known hypersensitivity to any aminoglycoside.

5. WARNINGS AND PRECAUTIONS

5.1 Bronchospasm

Bronchospasm can occur with inhalation of tobramycin inhalation solution. In clinical studies with tobramycin inhalation solution, changes in FEV_1 measured after the inhaled dose were similar in tobramycin inhalation solution and placebo groups. Bronchospasm that occurs during the use of tobramycin inhalation solution should be treated as medically appropriate.

5.2 Ototoxicity

Transient tinnitus occurred in eight tobramycin inhalation solution treated patients versus no placebo patients in the clinical studies. Tinnitus may be a sentinel symptom of ototoxicity, and therefore the onset of this symptom warrants further clinical investigation. In postmarketing experience, patients receiving tobramycin inhalation solution have reported hearing loss. Ototoxicity, manifested as both auditory and vestibular toxicity, has been reported with parenteral aminoglycosides. Vestibular toxicity may be manifested by vertigo, ataxia or dizziness. Patients with known or suspected auditory or vestibular dysfunction should be closely monitored when taking tobramycin inhalation solution. Monitoring might include obtaining audiometric evaluations and serum tobramycin levels. If ototoxicity is noted, the patient should be managed as medically appropriate, including potentially discontinuing tobramycin inhalation solution *[see Adverse Reactions (6.2)]*.

5.3 Nephrotoxicity

Nephrotoxicity was not seen during clinical studies with tobramycin inhalation solution but has been associated with aminoglycosides as a class. Patients with known or suspected renal dysfunction or taking concomitant nephrotoxic drugs along with tobramycin inhalation solution should have serum concentrations of tobramycin and laboratory measurements of renal function obtained at the discretion of the treating physician. If nephrotoxicity develops, the patient should be managed as medically appropriate, including potentially discontinuing tobramycin inhalation solution.

5.4 Neuromuscular Disorders

Aminoglycosides, including tobramycin, may aggravate muscle weakness because of a potential curare-like effect on neuromuscular function. Neuromuscular blockade, respiratory failure, and prolonged respiratory paralysis may occur more commonly in patients with underlying neuromuscular disorders, such as myasthenia gravis or Parkinson’s disease. Prolonged respiratory paralysis may also occur in patients receiving neuromuscular blocking agents. If neuromuscular blockade occurs, it may be reversed by the administration of calcium salts but mechanical assistance may be necessary.

5.5 Embryo-Fetal Toxicity

Aminoglycosides can cause fetal harm when administered to a pregnant woman. Aminoglycosides cross the placenta, and streptomycin has been associated with several reports of total, irreversible, bilateral congenital deafness in pediatric patients exposed in utero. The risk with inhaled tobramycin is less well characterized. Patients who use tobramycin inhalation solution during pregnancy, or become pregnant while taking tobramycin inhalation solution should be apprised of the potential hazard to the fetus.

5.6 Concomitant Use of Systemic Aminoglycosides

Patients receiving concomitant tobramycin inhalation solution and parenteral aminoglycoside therapy should be monitored as clinically appropriate for toxicities associated with aminoglycosides as a class. Serum tobramycin levels should be monitored.

6. ADVERSE REACTIONS

The following serious adverse reactions are described below and elsewhere in the labeling:

- Bronchospasm *[see Warnings and Precautions (5.1)]*
- Ototoxicity *[see Warnings and Precautions (5.2)]*

6.1 Clinical Trials Experience

Because clinical trials are conducted under widely varying conditions, adverse reaction rates observed in the clinical trials of a drug cannot be directly compared to rates in the clinical trials of another drug and may not reflect the rates observed in practice.

Tobramycin inhalation solution was studied in two clinical studies in 258 cystic fibrosis patients ranging in age from 6 to 48 years. Patients received tobramycin inhalation solution in alternating periods of 28 days on and 28 days off drug in addition to their standard cystic fibrosis therapy for a total of 24 weeks. Adverse reactions reported in these studies are described below:

- The most frequent adverse reactions in the tobramycin inhalation arm were cough, pharyngitis, and increased sputum (see Table 1).
- Thirty-three patients (13%) treated with tobramycin inhalation solution complained of voice alteration compared to 17 (7%) placebo patients. Voice alteration was more common in the on-drug periods.
- Eight patients from the tobramycin inhalation solution group (3%) reported tinnitus compared to no placebo patients. All episodes were transient, resolved without discontinuation of the tobramycin inhalation solution treatment regimen, and were not associated with loss of hearing in audiograms.

Table 1 lists the percent of patients with selected adverse reactions that occurred in >5% of tobramycin inhalation solution patients during the two Phase III studies.

Table 1: Percent of Patients With Selected Adverse Reactions Occurring in >5% of Tobramycin Inhalation Solution Patients

Adverse Reaction	Tobramycin Inhalation Solution (n=258) %	Placebo (n=262) %
Cough Increased	46.1	47.3
Pharyngitis	38.0	39.3
Sputum Increased	37.6	39.7
Dyspnea	33.7	38.5
Hemoptysis	19.4	23.7
Lung Function Decreased[1]	16.3	15.3
Voice Alteration	12.8	6.5
Taste Perversion	6.6	6.9
Rash	5.4	6.1

[1] Includes reported decreases in pulmonary function tests or decreased lung volume on chest radiograph associated with intercurrent illness or study drug administration.

Selected adverse reactions that occurred in less than or equal to 5% of patients treated with tobramycin inhalation solution

Ear and labyrinth disorders

Tinnitus

Musculoskeletal and connective tissue disorders

Myalgia

Infections and infestations

Laryngitis

6.2 Postmarketing Experience

The following adverse reactions have been identified during post approval use of tobramycin inhalation solution. Because these reactions are reported voluntarily from a population of uncertain size, it is not always possible to reliably estimate their frequency or establish a causal relationship to drug exposure.

Ear and labyrinth disorders

Hearing loss: Some of these reports occurred in patients with previous or concomitant treatment with systemic aminoglycosides. Patients with hearing loss frequently reported tinnitus. *[see WARNINGS and Precautions (5.2)]*

Skin and subcutaneous tissue disorders

Hypersensitivity, pruritus, urticaria, rash

Nervous system disorders

Aphonia, dysgeusia

Respiratory, thoracic, and mediastinal disorders

Bronchospasm *[see Warnings and Precautions (5.1)]*, oropharyngeal pain

7. DRUG INTERACTIONS

7.1 Drugs with Neurotoxic, Nephrotoxic or Ototoxic Potential

Concurrent and/or sequential use of tobramycin inhalation solution with other drugs with neurotoxic, nephrotoxic, or ototoxic potential should be avoided if possible.

7.2 Diuretics

Some diuretics can enhance aminoglycoside toxicity by altering aminoglycoside concentrations in serum and tissue. Tobramycin inhalation solution should not be administered concomitantly with ethacrynic acid, furosemide, urea, or intravenous mannitol.

8. USE IN SPECIFIC POPULATIONS

8.1 Pregnancy

Pregnancy Category D *[See Warnings and Precautions (5.5)]*

Aminoglycosides can cause fetal harm (e.g., congenital deafness) when administered to a pregnant woman. No adequate and well-controlled studies of tobramycin inhalation solution have been conducted in pregnant women. If tobramycin inhalation solution is used during pregnancy, or if the patient becomes pregnant while taking tobramycin inhalation solution, the patient should be apprised of the potential hazard to the fetus.

No reproduction toxicology studies have been conducted with tobramycin inhalation solution. However, subcutaneous administration of tobramycin at doses of 100 or 20 mg/kg/day during organogenesis was not

teratogenic in rats or rabbits, respectively. Doses of tobramycin ≥40 mg/kg/day were severely maternally toxic to rabbits and precluded the evaluation of teratogenicity. Ototoxicity was not evaluated in offspring during nonclinical reproduction toxicity studies with tobramycin.

8.3 Nursing Mothers

It is not known if tobramycin inhalation solution will reach sufficient concentrations after administration by inhalation to be excreted in human breast milk. Because of the potential for ototoxicity and nephrotoxicity in nursing infants from tobramycin inhalation solution, a decision should be made whether to discontinue nursing or to discontinue the drug, taking into account the importance of the drug to the mother.

8.4 Pediatric Use

The safety and efficacy of tobramycin inhalation solution have not been studied in pediatric patients under 6 years of age.

8.5 Geriatric Use

Clinical studies of tobramycin inhalation solution did not include patients aged 65 years and over. Tobramycin is known to be substantially excreted by the kidney, and the risk of adverse reactions to this drug may be greater in patients with impaired renal function. Because elderly patients are more likely to have decreased renal function, it may be useful to monitor renal function *[see Warnings and Precautions (5.3)]*.

10. OVERDOSAGE

Signs and symptoms of acute toxicity from overdosage of IV tobramycin might include dizziness, tinnitus, vertigo, loss of high-tone hearing acuity, respiratory failure, and neuromuscular blockade. Administration by inhalation results in low systemic bioavailability of tobramycin. Tobramycin is not significantly absorbed following oral administration. Tobramycin serum concentrations may be helpful in monitoring overdosage.

11. DESCRIPTION

KITABIS PAK contains tobramycin inhalation solution, USP and the PARI LC PLUS Reusable Nebulizer (PARI LC PLUS). Tobramycin inhalation solution is a sterile, clear, slightly yellow, non-pyrogenic, aqueous solution with the pH and salinity adjusted specifically for administration by a compressed air driven PARI LC PLUS® Reusable Nebulizer. The chemical formula for tobramycin is $C_{18}H_{37}N_5O_9$ and the molecular weight is 467.52. Tobramycin is O-3-amino-3-deoxy-α-D-glucopyranosyl-(1→4)-O-[2,6-diamino-2,3,6-trideoxy-α-D-*ribo*-hexopyranosyl-(1→6)]-2-deoxy-L-streptamine. The structural formula for tobramycin is:

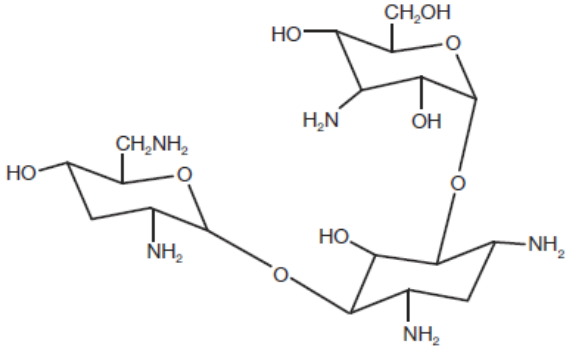

Each single-use 5 mL ampule contains 300 mg tobramycin and 11.25 mg sodium chloride in sterile water for injection. Sulfuric acid and sodium hydroxide are added to adjust the pH to 6.0. Nitrogen is used for sparging. The formulation contains no preservatives. The inhalation solution has an osmolality in the range 135 to 200 mOsmol/kg.

The PARI LC PLUS Reusable Nebulizer has the following performance characteristics with tobramycin inhalation solution [measured using Next Generation Impactor (NGI) at 15L/min continuous flow, standard

conditions (50%RH, 23ºC)]: (1) Delivered Dose: 174 mg; (2) Fine Particle Dose (<5µm): 97 mg; (3) Nebulization Time: 13 min.; (4) Mass Median Aerodynamic Diameter: 4.3 µm; (5) Geometric Standard Deviation (GSD): 2.2 µm.

12. CLINICAL PHARMACOLOGY

12.1 Mechanism of Action

Tobramycin is an antibacterial drug *[see Clinical Pharmacology (12.4)]*.

12.3 Pharmacokinetics

Tobramycin inhalation solution contains tobramycin, a cationic polar molecule that does not readily cross epithelial membranes. The bioavailability of tobramycin inhalation solution may vary because of individual differences in nebulizer performance and airway pathology. Following administration of tobramycin inhalation solution, tobramycin remains concentrated primarily in the airways.

Sputum Concentrations: Ten minutes after inhalation of the first 300-mg dose of tobramycin inhalation solution, the average concentration of tobramycin was 1237 mcg/g (ranging from 35 to 7414 mcg/g) in sputum. Tobramycin does not accumulate in sputum; after 20 weeks of therapy with the tobramycin inhalation solution regimen, the average concentration of tobramycin at ten minutes after inhalation was 1154 mcg/g (ranging from 39 to 8085 mcg/g) in sputum. High variability of tobramycin concentration in sputum was observed. Two hours after inhalation, sputum concentrations declined to approximately 14% of tobramycin levels at ten minutes after inhalation.

Serum Concentrations: The average serum concentration of tobramycin one hour after inhalation of a single 300 mg dose of tobramycin inhalation solution by cystic fibrosis patients was 0.95 mcg/mL. After 20 weeks of therapy on the tobramycin inhalation solution regimen, the average serum tobramycin concentration one hour after dosing was 1.05 mcg/mL.

Elimination: The elimination half-life of tobramycin from serum is approximately 2 hours after intravenous (IV) administration. Assuming tobramycin absorbed following inhalation behaves similarly to tobramycin following IV administration, systemically absorbed tobramycin is eliminated principally by glomerular filtration. Unabsorbed tobramycin, following tobramycin inhalation solution administration, is likely eliminated primarily in expectorated sputum.

12.4 Microbiology

Mechanism of Action

Tobramycin is an aminoglycoside antibacterial produced by *Streptomyces tenebrarius*. It acts primarily by disrupting protein synthesis, leading to altered cell membrane permeability, progressive disruption of the cell envelope, and eventual cell death.

Tobramycin has in vitro activity against Gram-negative bacteria including *P. aeruginosa*. It is bactericidal in vitro at peak concentrations equal to or slightly greater than the minimum inhibitory concentration.

Susceptibility Testing

Interpretive criteria for inhaled antibacterial products are not defined. In vitro antimicrobial susceptibility test methods used to determine the susceptibility for parenteral tobramycin therapy can be used to monitor the susceptibility of *P. aeruginosa* isolated from cystic fibrosis patients.[1,2,3] The relationship between in vitro susceptibility test results and clinical outcome with tobramycin inhalation solution therapy is not clear. A single sputum sample from a cystic fibrosis patient may contain multiple morphotypes of *P. aeruginosa* and each morphotype may require a different concentration of tobramycin to inhibit its growth in vitro. Patients should be monitored for changes in tobramycin susceptibility.

13. NONCLINICAL TOXICOLOGY

13.1 Carcinogenesis, Mutagenesis, Impairment of Fertility

A two-year rat inhalation toxicology study to assess carcinogenic potential of tobramycin inhalation solution has been completed. Rats were exposed to tobramycin inhalation solution for up to 1.5 hours per day for 95 weeks. The clinical formulation of the drug was used for this carcinogenicity study. Serum levels of tobramycin of up to 35 mcg/mL were measured in rats, in contrast to the average 1 mcg/mL levels observed in cystic fibrosis patients in clinical trials. There was no drug-related increase in the incidence of any variety of tumor.

Additionally, tobramycin has been evaluated for genotoxicity in a battery of in vitro and in vivo tests. The Ames bacterial reversion test, conducted with 5 tester strains, failed to show a significant increase in revertants with or without metabolic activation in all strains. Tobramycin was negative in the mouse lymphoma forward mutation assay, did not induce chromosomal aberrations in Chinese hamster ovary cells, and was negative in the mouse micronucleus test.

Subcutaneous administration of up to 100 mg/kg of tobramycin did not affect mating behavior or cause impairment of fertility in male or female rats.

14. CLINICAL STUDIES

Two identically designed, double-blind, randomized, placebo-controlled, parallel group, 24-week clinical studies (Study 1 and Study 2) at a total of 69 cystic fibrosis centers in the United States were conducted in cystic fibrosis patients with *P. aeruginosa* with tobramycin inhalation solution. Subjects who were less than 6 years of age, had a baseline creatinine of >2 mg/dL, or had *B. cepacia* isolated from sputum were excluded. All subjects had baseline FEV_1 % predicted between 25% and 75%. In these clinical studies, 258 patients received tobramycin inhalation solution therapy on an outpatient basis (see Table 2) using a PARI LC PLUS nebulizer along with a DeVilbiss Pulmo-Aide compressor.

Table 2: Dosing Regimens in Clinical Studies

	Cycle 1		**Cycle 2**		**Cycle 3**	
	28 days	28 days	28 days	28 days	28 days	28 days
TOBRAMYCIN Inhalation Solution regimen n=258	TOBRAMYCIN Inhalation Solution 300 mg BID	No drug	TOBRAMYCIN Inhalation Solution 300 mg BID	No drug	TOBRAMYCIN Inhalation Solution 300 mg BID	No drug
Placebo regimen n=262	Placebo BID		Placebo BID		Placebo BID	

All patients received either tobramycin inhalation solution or placebo (saline with 1.25 mg quinine for flavoring) in addition to standard treatment recommended for cystic fibrosis patients, which included oral and parenteral anti-pseudomonal therapy, Beta 2-agonists, cromolyn, inhaled steroids, and airway clearance techniques. In addition, approximately 77% of patients were concurrently treated with dornase alfa.

In each study, tobramycin inhalation solution -treated patients experienced significant improvement in pulmonary function. Improvement was demonstrated in the tobramycin inhalation solution group in Study 1 by an average increase in FEV_1 % predicted of about 11% relative to baseline (Week 0) during 24 weeks compared to no average change in placebo patients. In Study 2, tobramycin inhalation solution -treated

patients had an average increase of about 7% compared to an average decrease of about 1% in placebo patients. Figure 1 shows the average relative change in FEV1 % predicted over 24 weeks for both studies.

Figure 1: Relative Change From Baseline in FEV1% Predicted

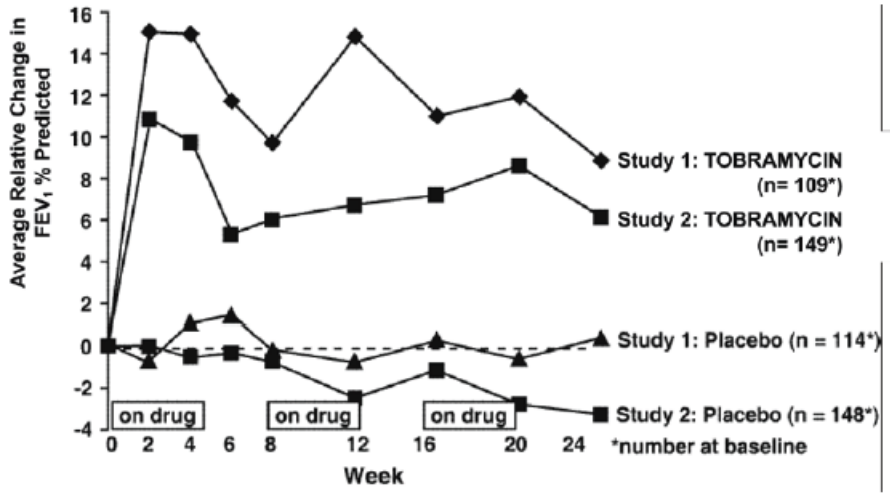

In each study, tobramycin inhalation solution therapy resulted in a significant reduction in the number of *P. aeruginosa* colony forming units (CFUs) in sputum during the on-drug periods. Sputum bacterial density returned to baseline during the off-drug periods. Reductions in sputum bacterial density were smaller in each successive cycle. (see Figure 2).

Figure 2: Absolute Change From Baseline in Log_{10} CFUs

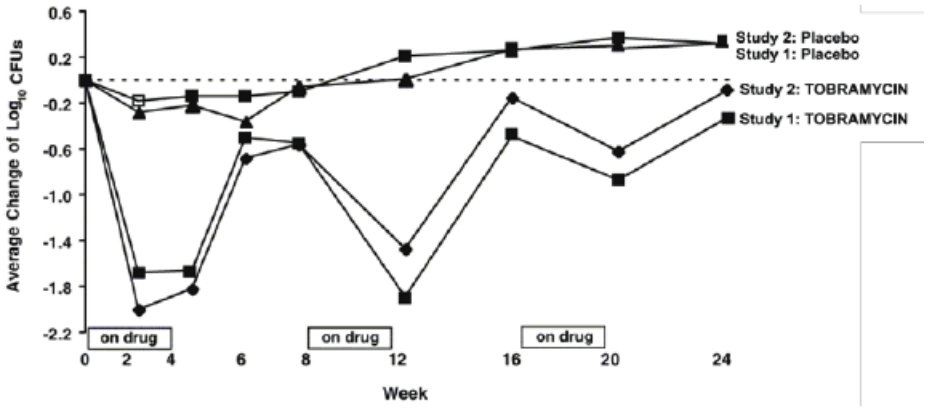

Patients treated with tobramycin inhalation solution were hospitalized for an average of 5.1 days compared to 8.1 days for placebo patients. Patients treated with tobramycin inhalation solution required an average of 9.6 days of parenteral anti-pseudomonal antibiotic treatment compared to 14.1 days for placebo patients. During the 6 months of treatment, 40% of tobramycin inhalation solution patients and 53% of placebo patients were treated with parenteral anti-pseudomonal antibiotics.

The relationship between in-vitro susceptibility test results and clinical outcome with tobramycin inhalation solution therapy is not clear. However, 4 tobramycin inhalation solution patients who began the clinical trial with P. *aeruginosa* isolates having MIC values ≥128 μg/mL did not experience an improvement in FEV1 or a

decrease in sputum bacterial density.

15. REFERENCES

1. Clinical and Laboratory Standards Institute (CLSI). *Methods for Dilution Antimicrobial Susceptibility Tests for Bacteria that Grow Aerobically; Approved Standard - Ninth Edition*. CLSI document M07-A9, Clinical and Laboratory Standards Institute, 950 West Valley Road, Suite 2500, Wayne, Pennsylvania 19087, USA, 2012.
2. Clinical and Laboratory Standards Institute (CLSI). *Performance Standards for Antimicrobial Disk Diffusion Susceptibility Tests; Approved Standard – Eleventh Edition.* CLSI document M02-A11, Clinical and Laboratory Standards Institute, 950 West Valley Road, Suite 2500, Wayne, Pennsylvania 19087, USA, 2012.
3. Clinical and Laboratory Standards Institute (CLSI). *Performance Standards for Antimicrobial Susceptibility Testing; Twenty-fourth Informational Supplement*, CLSI document M100-S24, Clinical and Laboratory Standards Institute, 950 West Valley Road, Suite 2500, Wayne, Pennsylvania 19087, USA, 2014.

16. HOW SUPPLIED / STORAGE AND HANDLING

16.1 How Supplied

KITABIS PAK co-packaged kit (NDC 24492-850-56) is available in cartons containing one reusable PARI LC Plus nebulizer (Model No.: 022B81-T) and 14 tobramycin inhalation solution pouches. Each pouch contains four 300mg/5ml ampules of tobramycin inhalation solution for a total of 56 ampules in each carton. Each carton constitutes a 28 day supply.

16.2 Storage

- Tobramycin inhalation solution should be stored under refrigeration at 2-8ºC/36-46ºF. Upon removal from the refrigerator, or if refrigeration is unavailable, tobramycin inhalation solution pouches (opened or unopened) may be stored at room temperature (up to 25 C/77ºF) for up to 28 days. Tobramycin inhalation solution should not be used beyond the expiration date stamped on the ampule when stored under refrigeration (2-8ºC/36-46ºF) or beyond 28 days when stored at room temperature (25ºC/77ºF).
- Tobramycin inhalation solution ampules should not be exposed to intense light. The solution in the ampule is slightly yellow, but may darken with age if not stored in the refrigerator; however, the color change does not indicate any change in the quality of the product as long as it is stored within the recommended storage conditions.

17. PATIENT COUNSELING INFORMATION

Advise the patient to read the FDA-approved patient labeling (Patient Information and Instructions for Use).

<u>Instructions for Administration</u>
Instruct patients to read the *Instructions for Use* before starting KITABIS PAK. Instruct patients to use the tobramycin inhalation solution in KITABIS PAK only with the PARI LC Plus® Reusable Nebulizer included in the KITABIS PAK.

<u>Difficulty Breathing</u>
Advise patients to inform their physicians if they experience shortness of breath or wheezing after administration of tobramycin inhalation solution. Tobramycin inhalation solution can cause a narrowing of the airway *[see Warnings and Precautions (5.1)]***.**

<u>Hearing Loss</u>
Advise patients to inform their physician if they experience ringing in the ears, dizziness, or any changes in hearing because tobramycin inhalation solution has been associated with hearing loss *[see Warnings and Precautions (5.2)]***.**

Kidney Damage
Advise patients to inform their physician if they have any history of kidney problems because tobramycin inhalation solution is in a class of drugs that have caused kidney damage *[see Warnings and Precautions (5.3)]***.**

Pregnancy
Advise patients to talk with their physician if they want to become pregnant while on tobramycin inhalation solution because tobramycin inhalation solution is in a class of antibacterial drugs that have caused harm to the fetus*[see Warnings and Precautions (5.5)]***.**

Nursing Mothers
Advise patients to talk with their physician before using tobramycin inhalation solution while nursing a baby *[see Use in Specific Populations (8.3)]*.

Additional Information
PARI LC PLUS® Reusable Nebulizer: 1-800-327-8632
Devilbiss® Pulmo-Aide® air compressor: 1-800-338-1988
KITABIS PAK: 1-844-KITABIS (548-2247)

Manufactured by:
Catalent Pharma Solutions, LLC
Woodstock, IL 60098

Distributed by:

PARI Respiratory Equipment, Inc.
2412 PARI Way, Midlothian, VA 23112

850D5601 Rev. 11/2014

© 2013-2014 PulmoFlow, Inc.. All rights reserved.

Patient Information

KITABIS™ PAK (Ki TAH biss Pak)

(tobramycin inhalation solution)

for oral inhalation

Read this Patient Information before you start using KITABIS PAK and each time you get a refill. There may be new information. This information does not take the place of talking with your healthcare provider about your medical condition or your treatment.

What is KITABIS PAK?

KITABIS PAK contains a prescription medicine and a PARI LC PLUS Reusable Nebulizer used to treat adults and children 6 years of age and older with cystic fibrosis who have a bacterial infection called Pseudomonas aeruginosa. KITABIS PAK contains an antibacterial medicine called tobramycin (an aminoglycoside).

It is not known if KITABIS PAK is safe and effective:

- in children under 6 years of age
- in people who have an FEV_1 less than 25% or greater than 75% predicted
- in people who are colonized with a bacterium called Burkholderia cepacia
- when used for more than 3 cycles

Who should not use KITABIS PAK?

Do not use KITABIS PAK if you are allergic to tobramycin, any of the ingredients in KITABIS PAK, or to any other aminoglycoside antibacterial medicine.

What should I tell my healthcare provider before using KITABIS PAK?

Before you use KITABIS PAK, tell your healthcare provider if you:

- have or have had hearing problems (including noises in your ears)
- have dizziness
- have or have had kidney problems
- have or have had problems with muscle weakness such as myasthenia gravis or Parkinson's disease
- have or have had breathing problems such as wheezing, coughing, or chest tightness
- have had an organ transplant
- are pregnant or plan to become pregnant. See "What are the possible side effects of KITABIS PAK?" below for more information.
- are breastfeeding or plan to breastfeed. It is not known if the medicine in KITABIS PAK (tobramycin inhalation solution) passes into your breast milk.

Tell your healthcare provider about all the medicines you take, including prescription and over-the-counter, vitamins, and herbal supplements.

Using KITABIS PAK with certain other medicines can cause serious side effects.

If you are using KITABIS PAK, you should discuss with your healthcare provider if you should take:

- other medicines that may harm your nervous system, kidneys, or hearing
- "water pills" (diuretics) such as Edecrin (ethacrynic acid), Lasix (furosemide), or mannitol
- urea

Ask your healthcare provider or pharmacist for a list of these medicines, if you are not sure.

Know the medicines you take. Keep a list of them and show it to your healthcare provider and pharmacist when you get a new medicine.

How should I use KITABIS PAK?

- See the step-by-step Instructions for Use at the end of this Patient Information leaflet about the right way to use KITABIS PAK.
- Use KITABIS PAK exactly as your healthcare provider tells you to. Ask your healthcare provider or pharmacist if you are not sure.
- The usual dose of KITABIS PAK for adults and children 6 years of age and over is:
  - 1 ampule of tobramycin inhalation solution inhaled by mouth in the morning and 1 ampule of tobramycin inhalation solution inhaled by mouth in the evening using your PARI LC PLUS Reusable Nebulizer with a DeVilbiss Pulmo-Aide air compressor.
- Each dose of KITABIS PAK should take about 15 minutes to finish.
- Each dose of KITABIS PAK should be used as close to 12 hours apart as possible.
- Do not use your dose of KITABIS PAK less than 6 hours apart.
- After using KITABIS PAK for 28 days, you should stop using it for 28 days. After you have stopped using KITABIS PAK for 28 days, you should start using KITABIS PAK again for 28 days. It is important that you keep to the 28-day on, 28-day off cycle.
- Do not mix the medicine in KITABIS PAK with other medicines including dornase alfa (Pulmozyme®) in your nebulizer.
- If you are taking other medicines inhaled through your mouth (bronchodilators), your healthcare provider will tell you how to take your medicine the right way.
- If you inhale too much of the medicine in KITABIS PAK, tell your healthcare provider right away.

What are the possible side effects of KITABIS PAK?

KITABIS PAK can cause serious side effects, including:

- **severe breathing problems (bronchospasm).** Tell your healthcare provider right away if you get any of these symptoms of bronchospasm while using KITABIS PAK:
  - shortness of breath with wheezing
  - coughing and chest tightness
- **hearing loss or ringing in the ears (ototoxicity).** Tell your healthcare provider right away if you have hearing loss or hear noises in your ears (such as ringing or hissing), or if you develop vertigo, dizziness, or difficulty with balance.
- **worsening kidney problems (nephrotoxicity).** Your healthcare provider may do a blood test and urine test to check how your kidneys are working while you are using KITABIS PAK.
- **worsening muscle weakness.** The medicine in KITABIS PAK (tobramycin inhalation

solution) is in a class of medicines that can cause muscle weakness to get worse in people who already have problems with muscle weakness (myasthenia gravis or Parkinson's disease).

- **The medicine in KITABIS PAK (tobramycin inhalation solution) is in a class of medicines which may cause harm to an unborn baby.**

The most common side effects of KITABIS PAK include:

- cough
- sore throat
- productive cough
- shortness of breath
- coughing up blood
- worsening of lung problems or cystic fibrosis
- changes in your voice (hoarseness)
- altered taste
- rash

Tell your healthcare provider about any side effect that bothers you or that does not go away.

These are not all of the possible side effects of KITABIS PAK. For more information, ask your healthcare provider or pharmacist.

Call your doctor for medical advice about side effects. You may report side effects to FDA at 1-800-FDA-1088.

General information about the safe and effective use of KITABIS PAK.

Medicines are sometimes prescribed for purposes other than those listed in a patient information leaflet. Do not use KITABIS PAK for a condition for which it was not prescribed. Do not give KITABIS PAK to other people, even if they have the same symptoms that you have. It may harm them.

This leaflet summarizes the most important information about KITABIS PAK. If you would like more information, talk with your healthcare provider. You can ask your healthcare provider or pharmacist for information about KITABIS PAK that is written for health professionals.

For more information, go to www.KITABIS.com or call 1-844-KITABIS(548-2247).

What are the ingredients in KITABIS PAK?

Active ingredient: tobramycin

Inactive ingredients: sodium chloride, sulfuric acid, and sodium hydroxide (for pH adjustment)

Instructions for Use

KITABIS PAK (Ki TAH biss Pak)

(tobramycin inhalation solution)

Follow the instructions below for using KITABIS PAK which contains tobramycin inhalation solution and the PARI LC PLUS Reusable Nebulizer (PARI LC PLUS). If you have any questions, ask your healthcare provider or pharmacist.

Each KITABIS PAK carton (28-day supply) contains 56 tobramycin inhalation solution ampules packed in 14 foil pouches that each contain 4 single-use tobramycin inhalation solution ampules.

You will need the following supplies (See Figure A):

- 1 tobramycin inhalation solution ampule
- PARI LC PLUS® Reusable Nebulizer
- DeVilbiss Pulmo-Aide (Pulmo-Aide) air compressor
- tubing to connect the nebulizer and compressor
- clean, lint-free towel
- nose clip (optional, not pictured)

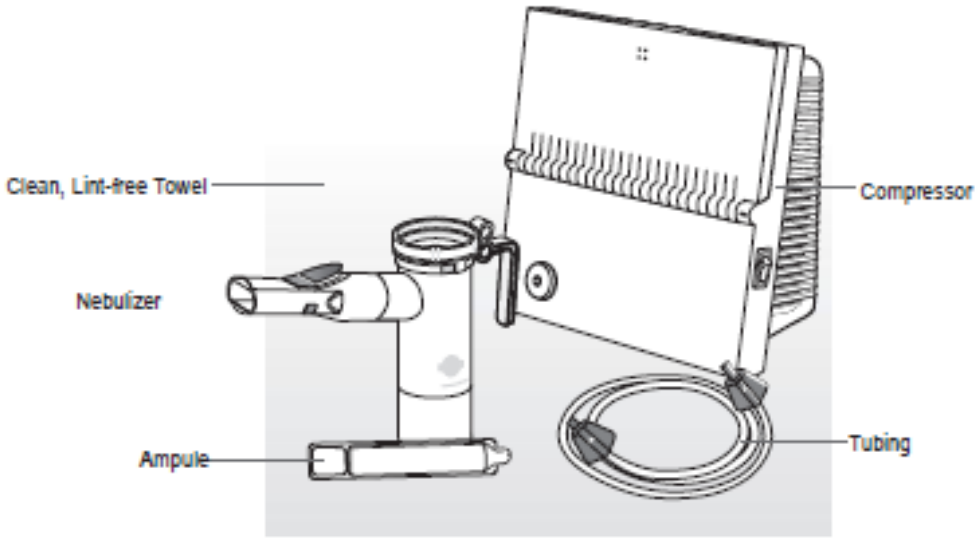

(Figure A)

Note: Read the Instructions for Use that come with your PARI LC PLUS Reusable Nebulizer and DeVilbiss Pulmo-Aide air compressor for detailed instructions on how to use and care for your nebulizer and air compressor before you use it.

Do not mix the medicine in KITABIS PAK with other medicines in your nebulizer.

The medicine in KITABIS PAK (tobramycin inhalation solution) comes in a sealed foil pouch. Do not open a sealed pouch until you are ready to use a dose. After opening the pouch, unopened ampules should be returned to and stored in the pouch.

Getting ready:

Open the PARI LC PLUS package. Place the PARI LC PLUS parts including Top and Bottom (Nebulizer Cup) Assembly, Inspiratory Valve Cap, Mouthpiece with Valve, and Tubing on a clean, dry surface or towel (See Figure B).

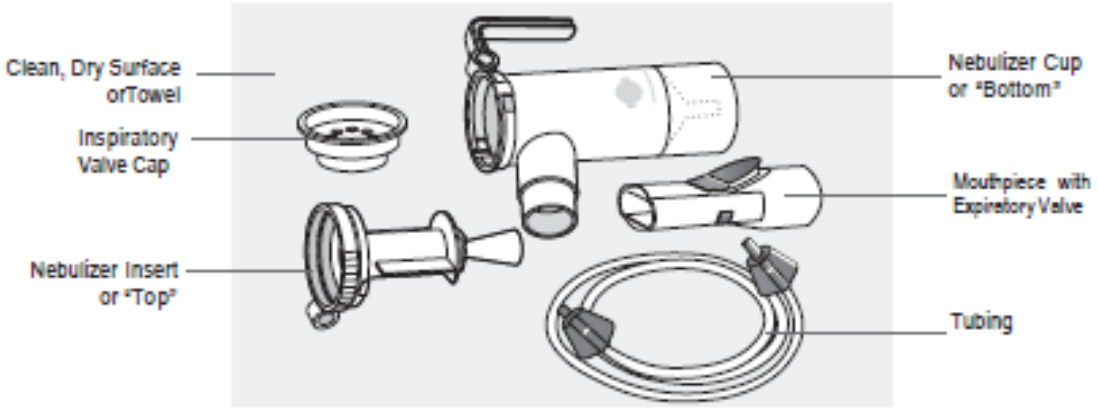

(Figure B)

Preparing your KITABIS PAK dose:

Step 1: Wash your hands with soap and water (See Figure C).

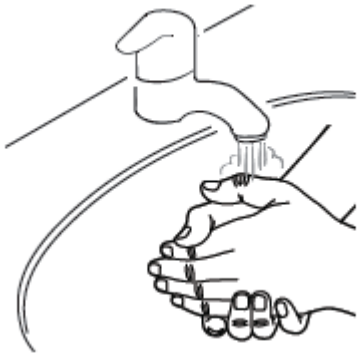

(Figure C)**Step 2:** Open the foil pouch (See Figure D).

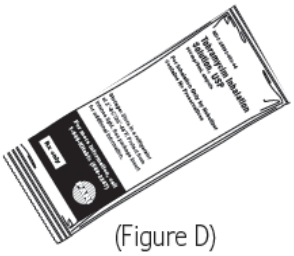

(Figure D)

Step 3: Separate 1 ampule by gently pulling apart at the TOP of the ampule and continue down to the bottom tabs (See Figure E) and use it right away.

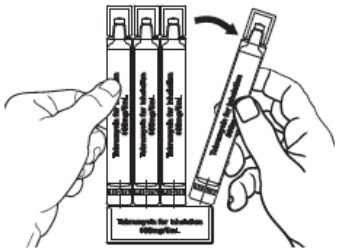

(Figure E)

Step 4: Hold the bottom tab on the KITABIS PAK ampule with 1 hand (See Figure F). With your other hand, hold the top of the ampule and twist off the top of the ampule (See Figure F).

- **Do not** squeeze the ampule until you are ready to squeeze all of the medicine into the Nebulizer Cup.

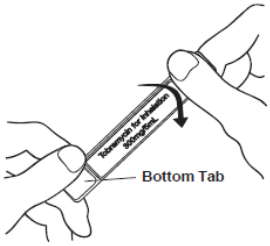

(Figure F)

Step 5: Hold the Nebulizer Cup and twist off the Nebulizer Insert or Top in a counter-clockwise direction (See Figure G). Set the top aside on a clean, dry, surface.

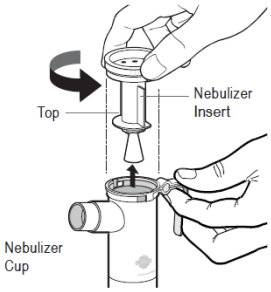

(Figure G)

Step 6: Squeeze all the medicine from the ampule into the Nebulizer Cup (See Figure H).

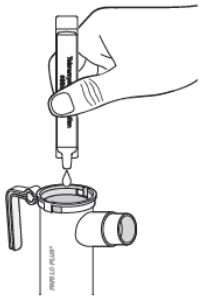

(Figure H)

Step 7: Replace the Nebulizer Cup Insert. Line up the semi-circle on the Nebulizer Insert with the Nebulizer Outlet and twist on the Nebulizer Cup Insert in a clock-wise direction until it is tight and the alignment rings are lined up (See Figure I).

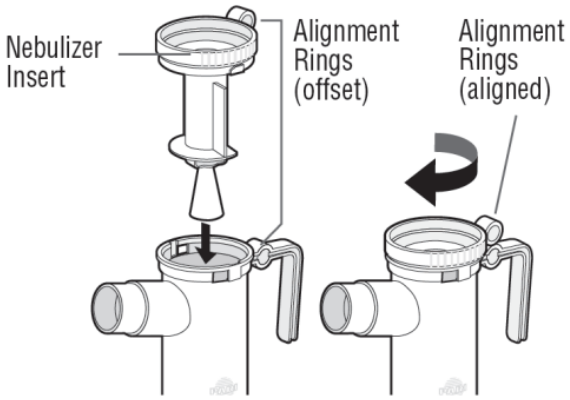

(Figure I)

Step 8: Push the Mouthpiece straight onto the Nebulizer Cup (See Figure J).

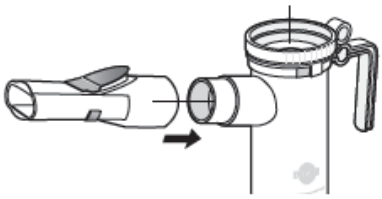

(Figure J)

Step 9: Firmly push the Inspiratory Valve Cap straight down onto the Nebulizer Cup Top (See Figure K). The Inspiratory Valve Cap should fit tightly.

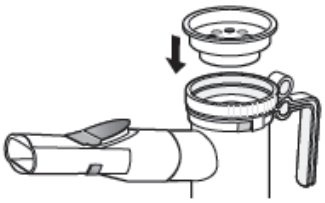

(Figure K)

Step 10: Connect 1 end of the tubing to the compressor air outlet (See Figure L). The tubing should fit tightly.

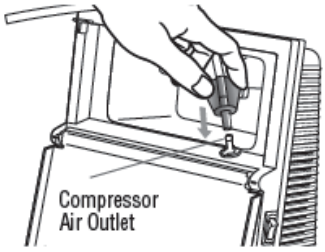

(Figure L)

Step 11: Plug your compressor into an electrical outlet (See Figure M).

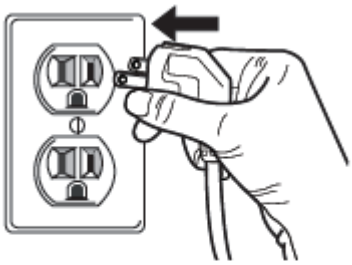

(Figure M)

Step 12: Hold the Nebulizer Cup upright and firmly push the free end of the tubing straight up onto the Air Intake on the bottom of the Nebulizer Cup (See Figure N). **Make sure to keep the Nebulizer Cup upright.**

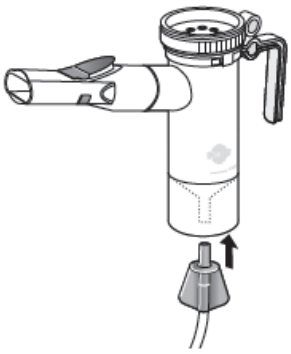

(Figure N)

Giving your KITABIS PAK dose:

Step 13: Turn on the compressor (See Figure O). You should see a steady mist coming from the Mouthpiece (See Figure P).

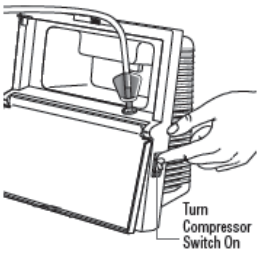

(Figure O)

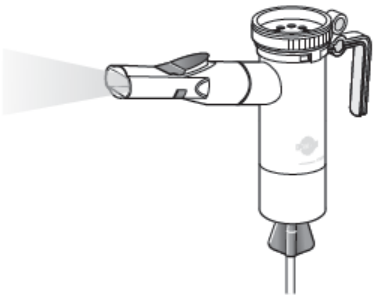

(Figure P)

Step 14: Sit or stand in a comfortable, upright position that will allow you to breathe normally. Place the Mouthpiece between your teeth and on top of your tongue and breathe normally only through your mouth (See Figure Q).

- Nose clips may help you breathe only through your mouth and not through your nose.

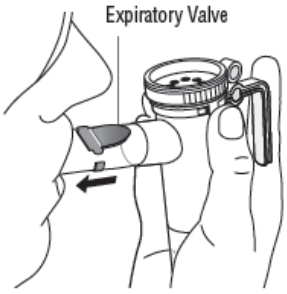

(Figure Q)

Step 15: Keep breathing in your KITABIS PAK dose for at least 15 minutes. You will know that you have received your full dose of medicine when you hear a "sputtering noise" coming from the Mouthpiece for at least 1 minute and the Nebulizer Cup is empty.

After your KITABIS PAK dose:

Step 16: Clean and disinfect your nebulizer (see manufacturer's Instructions for Use).

Care and Use of your DeVilbiss Pulmo-Aide compressor:

Follow the manufacturer's instructions for care and use of your compressor.

How should I store KITABIS PAK?

- Store tobramycin inhalation solution in the refrigerator between 36°F to 46°F (2°C to 8°C) until needed.
- You may store the tobramycin inhalation solution in the foil pouches (opened or unopened) at room temperature between 66°F to 77°F (20°C to 25°C) for up to 28 days.
- Do not use tobramycin inhalation solution after the expiration date stamped on the ampule.
- Keep tobramycin inhalation solution in the foil pouch and out of the light.
- Tobramycin inhalation solution is normally slightly yellow, but may get darker with age if unrefrigerated. The color change does not change how the medicine works.
- **Do not** use tobramycin inhalation solution if it is cloudy, has particles in the solution, or if it has been stored at room temperature for more than 28 days. Throw the applicable ampule(s) away in the household trash and get a new ampule.

Keep KITABIS PAK and all medicines out of the reach of children.

This Patient Information and Instructions for Use have been approved by the U.S. Food and Drug Administration.

Additional Information
PARI LC PLUS® Reusable Nebulizer: 1-800-327-8632
Devilbiss® Pulmo-Aide® air compressor: 1-800-338-1988
KITABIS PAK: 1-844-KITABIS (548-2247)

Manufactured by:
Catalent Pharma Solutions, LLC
Woodstock, IL 60098

Distributed by:

PARI Respiratory Equipment, Inc.
2412 PARI Way, Midlothian, VA 23112

850D5601 Rev. 11/2014

© 2013-2014 PulmoFlow, Inc.. All rights reserved.

Kitabis Pak Vial - FRONT

Kitabis Pak Vial - BACK

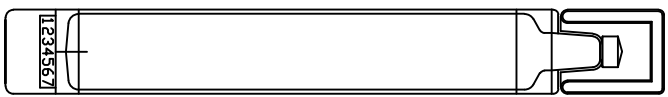

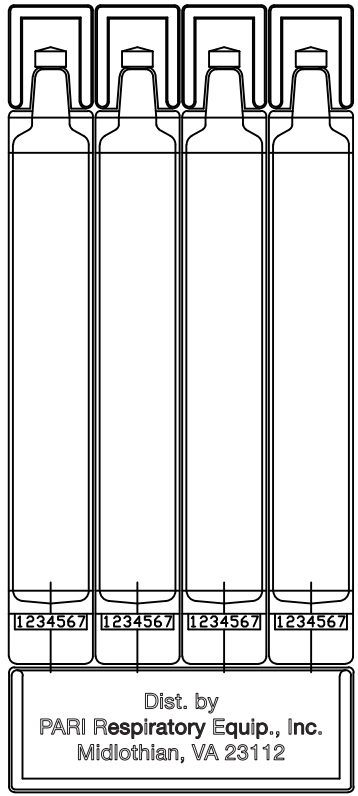

Reference ID: 3666579

Tobramycin Inhalation Solution, USP

300 mg / 5 mL Ampules

For Inhalation Only by Nebulizer

Contains No Preservatives

56 Single-Use Ampules (28-Day Supply)
(14 foil pouches – each pouch contains 4 Single-Use Ampules)

Storage: Store in a refrigerator at 2°-8°C / 36°-46°F. Protect from intense light. See package insert for additional information.

Contents: Each foil pouch contains four sterile, non-pyrogenic, single-use ampules. Each 5 mL ampule contains one 300 mg dose of Tobramycin USP and 11.25 mg Sodium Chloride in Sterile Water for Injection.

Dosage and Administration: Each single-use ampule contains one 300 mg dose. For inhalation only using PARI LC PLUS® Reusable Nebulizer and Devilbiss® Pulmo-Aide® compressor. See package insert for full prescribing information.

For more information, call 1-844-Kitabis (548-2247)

Manufacturered by:
Catalent Pharma Solutions, LLC
Woodstock, IL 60098

Distributed by:
PARI Respiratory Equipment, Inc.
Midlothian, VA 23112

PARI

Product of China
© 2013 PARI Respiratory Equipment, Inc.
850P0002 Rev A 6/14

Tobramycin Inhalation Solution, USP
300 mg / 5 mL Ampules
For Inhalation Only by Nebulizer
Contains No Preservatives
56 Single-Use Ampules (28-Day Supply)
(14 foil pouches – each pouch contains 4 Single-Use Ampules)

Store in Refrigerator

Rx only

PARI

Tobramycin Inhalation Solution, USP
300 mg / 5 mL Ampules
For Inhalation Only by Nebulizer
Contains No Preservatives
56 Single-Use Ampules (28-Day Supply)
(14 foil pouches – each pouch contains 4 Single-Use Ampules)

Tobramycin Inhalation Solution, USP
300 mg / 5 mL Ampules
For Inhalation Only by Nebulizer
Contains No Preservatives
56 Single-Use Ampules (28-Day Supply)
(14 foil pouches – each pouch contains 4 Single-Use Ampules)

Tobramycin Inhalation Solution, USP
300 mg / 5 mL Ampules
For Inhalation Only by Nebulizer
Contains No Preservatives
56 Single-Use Ampules (28-Day Supply)
(14 foil pouches – each pouch contains 4 Single-Use Ampules)

Store in Refrigerator

Rx only

PARI

Store in Refrigerator

Rx only

PARI

NDC: 24492-850-56

Kitabis™ Pak
Tobramycin Inhalation Solution, USP

300 mg / 5 mL Ampules

For Inhalation Only by Nebulizer
Contains No Preservatives

Storage: Store in a refrigerator at 2°-8°C/36°-46° F. Protect from intense light. See package insert for additional information.

Contents: Each foil pouch contains four sterile, non-pyrogenic, single-use ampules. Each 5 mL ampule contains one 300 mg dose of Tobramycin USP and 11.25 mg Sodium Chloride in Sterile Water for Injection.

Dosage and Administration: Each single-use ampule contains one 300 mg dose. For inhalation only using PARI LC PLUS® Reusable Nebulizer and Devilbiss® Pulmo-Aide® compressor. See package insert for full prescribing information.

Manufacturered by:
Catalent Pharma Solutions, LLC
Woodstock, IL 60098

Distributed by:
PARI Respiratory Equipment, Inc.
Midlothian, VA 23112

For more information, call
1-844-Kitabis (548-2247)

Store in Refrigerator

© 2013 PARI Respiratory Equipment, Inc.
850F5601 Rev A 6/14

NDC: 24492-850-56

Kitabis™ Pak
Tobramycin Inhalation Solution, USP

300 mg / 5 mL Ampules

For Inhalation Only by Nebulizer
Contains No Preservatives

Rx only

Store in Refrigerator

NDC: 24492-850-56

Kitabis™ Pak
Tobramycin Inhalation Solution, USP

300 mg / 5 mL Ampules

For Inhalation Only by Nebulizer
Contains No Preservatives

This Pak Includes:
- **56 Single-Use Ampules (28-Day Supply)**
  (14 foil pouches – each pouch contains 4 Single-Use Ampules)
- **1 PARI LC PLUS® Reusable Nebulizer Set**

DRUG
56 vials of Tobramycin Inhalation Solution
300mg/5mL

NDC: 24492-850-56

Kitabis™ Pak
Tobramycin Inhalation Solution, USP

300 mg / 5 mL Ampules

For Inhalation Only by Nebulizer
Contains No Preservatives

Rx only

Store in Refrigerator

NDC: 24492-850-56

Kitabis™ Pak
Tobramycin Inhalation Solution, USP

300 mg / 5 mL Ampules

For Inhalation Only by Nebulizer
Contains No Preservatives

This Pak Includes:
- **56 Single-Use Ampules (28-Day Supply)**
  (14 foil pouches – each pouch contains 4 Single-Use Ampules)
- **1 PARI LC PLUS® Reusable Nebulizer Set**

For more information, call
1-844-Kitabis (548-2247)

Store in Refrigerator

DEVICE
PARI LC PLUS®
Nebulizer Set

Reference ID: 3666579

NOT FOR RESALE

Includes One
PARI LC PLUS®
NEBULIZER SET

PART# 22B81-T

INCLUDES:

PARI LC PLUS® Nebulizer
Wing Tip® Tubing
Instructions For Use

For Use With Co-packaged Tobramycin Inhalation Solution Only

NOT FOR RESALE

Includes One
PARI LC PLUS®
NEBULIZER SET

For Use With Co-packaged Tobramycin Inhalation Solution Only

NOT FOR RESALE

© 2014 PARI Respiratory Equipment, Inc.
850P0004 Rev A 06/14

Reference ID: 3666579

INSTRUCTIONS FOR USE

For single patient use (one person) only

PARI LC PLUS®

REUSABLE NEBULIZER

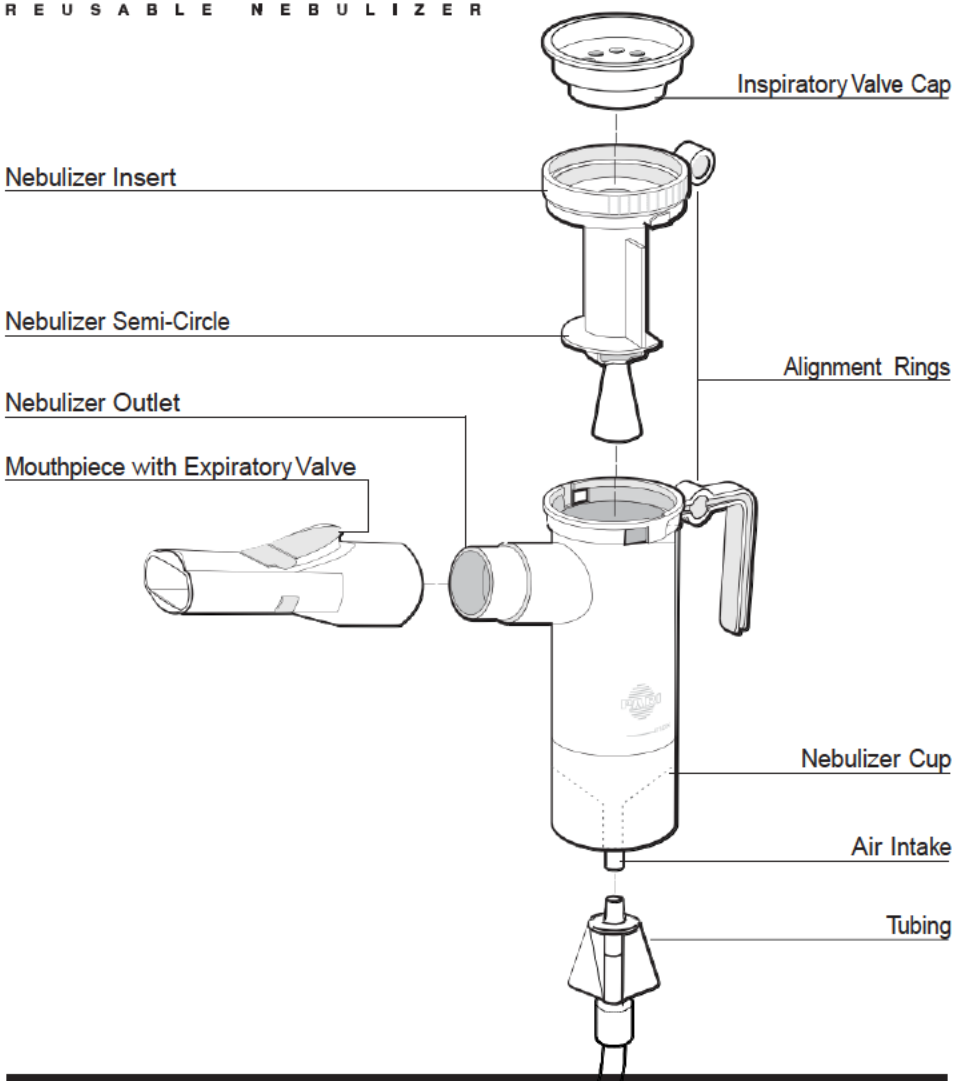

IMPORTANT: READ INSTRUCTIONS AND SAFETY PRECAUTIONS BEFORE USE.

Reference ID: 3666579

INDICATIONS FOR USE

The PARI LC PLUS® Reusable Nebulizer (PARI LC PLUS) represents the device component of the Kitabis Pak co-package. The PARI LC PLUS® Nebulizer is to be used to deliver the tobramycin inhalation solution contained with the Kitabis Pak.

A. SAFETY PRECAUTIONS

⚠CAUTION

The PARI LC PLUS is a handheld nebulizer designed to aerosolize the tobramycin inhalation solution included in the Kitabis Pak. The PARI LC PLUS is intended for adult and pediatric patients consistent with the indications for the Kitabis Pak. Improper use can result in serious or fatal illness or injury. Nebulizer is not sterile.

⚠WARNING

Use only when prescribed by a physician and with the prescribed medication.

⚠WARNING

1. To reduce the risk of bacterial growth, infection, illness, or injury from contamination: thoroughly clean and dry all parts of the nebulizer and thoroughly dry any moisture or condensation in the Tubing at the end of every treatment following the instructions in Section **C**.
2. Cleaning the nebulizer after each treatment is not enough, you must regularly disinfect or sterilize the nebulizer between treatments to prevent serious or fatal illness caused by contamination of the nebulizer.
3. Never use a nebulizer with a clogged nozzle. If the nozzle is clogged, the aerosol mist will be reduced, altered or stopped, which will diminish or eliminate the effectiveness of the treatment. If clogging occurs, replace the PARI LC PLUS.
4. Close supervision is necessary when this product is used by or near children and physically or mentally impaired patients. Never use when sleeping or drowsy.
5. This product contains small parts that may present a choking hazard to small children. The Tubing also presents a strangulation hazard. ALWAYS USE CLOSE ADULT SUPERVISION WHEN ADMINISTERING A TREATMENT TO A CHILD. DO NOT LEAVE CHILD UNATTENDED DURING TREATMENT.
6. Before use, check the PARI LC PLUS for proper assembly. All parts should be seated firmly in place. Use of an improperly assembled nebulizer could diminish or prevent adequate delivery of medication and the effectiveness of the treatment.

B. PARI LC PLUS SET-UP

1. *Identify Parts:* Lay out the contents of the PARI LC PLUS package on a lint-free towel Referring to the cover of these Instructions, you should have the following parts:
   - Nebulizer Insert or "Top"
   - Nebulizer Cup or "Bottom"
   - Inspiratory Valve Cap
   - Mouthpiece with Expiratory Valve
   - Tubing
2. *Clean/Disinfect Nebulizer Cup:* Refer to Sections C and D to clean and disinfect your PARI LC PLUS prior to first use. Re-assemble nebulizer.
3. *Connect Tubing To Compressor:* Connect one end of the Tubing to the compressor air outlet. The Tubing should fit snugly. Plug in your compressor (Fig. B) to an electrical outlet.
4. *Load Medication:* Remove the Nebulizer Insert by twisting counter-clockwise until it stops and lift up (Fig.C). Pour tobramycin inhalation solution into the Nebulizer Cup (Fig.D). Never fill past the max fill line of 8ml. Replace the Nebulizer Insert ensuring the two alignment rings are lined up with each other.
5. *Attach Mouthpiece or Mask:* If using the Mouthpiece, attach the Mouthpiece to the nebulizer outlet with the expiratory Valve facing up. Then attach the Inspiratory Valve Cap by pressing it firmly into the top of the nebulizer. If using a mask, refer to the mask instructions.
6. *Attach Tubing To Nebulizer Cup:* Firmly press other end of the Tubing to the Air Intake on the bottom of the PARI LC PLUS.
7. *Starting Treatment:* Sit in a relaxed, upright position and turn the compressor "ON".
8. *Nebulizer Position:* Place the Mouthpiece on top of tongue and close lips around it. Take slow, deep breaths. As you inhale, the Inspiratory Valve opens.
9. *Breathing:* Mouthpiece; inhale and exhale slowly through your mouth. As you exhale, the valve on the Mouthpiece opens to allow the exhaled mist to escape. Mask; place mask over nose and mouth and inhale and exhale slowly.
9. *Complete Treatment:* Continue until the tobramycin inhalation solution is gone or you hear a slight "sputtering" sound. Turn compressor off.

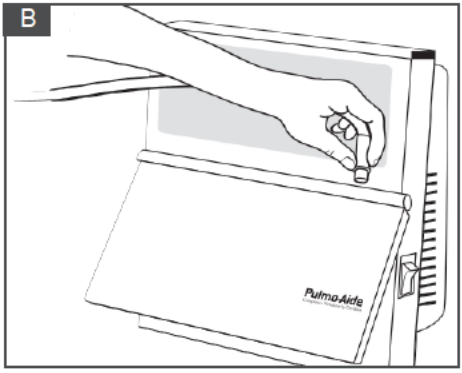

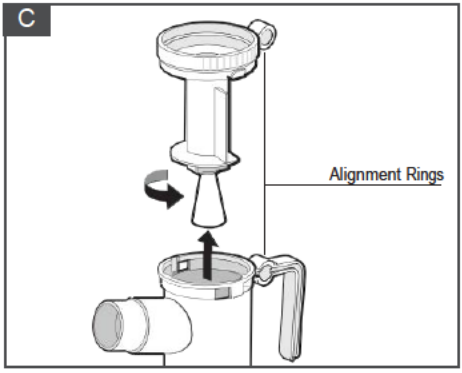

Reference ID: 3666579

C. CLEANING YOUR PARI LC PLUS

1. Disconnect the Tubing from the Air Intake on the bottom of the Nebulizer Cup.
2. If there is any moisture (condensation) in the Tubing, let the compressor run with only the Tubing attached for 2-3 minutes. The warm air from the compressor will dry out the tubing. Alternatively, you can dry the Tubing by removing it from the compressor and hanging it up with the "ends down" to allow any moisture to drain out and evaporate. Use a clean damp cloth to wipe the exterior of the Tubing.
3. Disassemble the PARI LC PLUS parts as illustrated on the cover.
4. Wash all parts with warm water and liquid dish soap. DO NOT WASH THE TUBING.
5. Rinse the PARI LC PLUS parts thoroughly with warm water and shake out water.
6. Air dry parts on a lint-free towel. Reassemble nebulizer when dry.
7. You can also wash all parts of the PARI LC PLUS on the top shelf of a dishwasher. **DO NOT WASH TUBING.** Place the PARI LC PLUS parts in a dishwasher basket, then place the basket on the top rack of the dishwasher. Remove and air dry the parts when the dishwasher cycle is complete.

⚠WARNING

TO REDUCE RISK OF INFECTION:

1. Nebulizer for single patient use (one person) only. Do not share your nebulizer with other patients.
2. You must regularly disinfect or sterilize the nebulizer between treatments. Failure to do so could lead to serious or fatal illness.

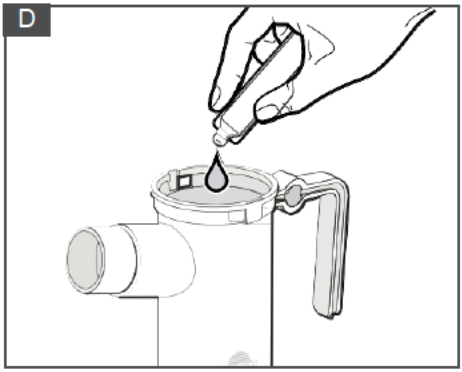

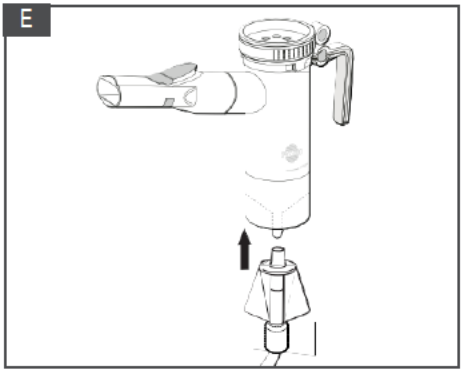

D. DISINFECTING YOUR PARI LC PLUS

1. Clean the nebulizer as described in Section **C**. For low-level disinfection, every other treatment day soak all parts of the PARI LC PLUS (except Tubing and mask) in a solution of 1 part distilled white vinegar and 3 parts hot tap water for 1 hour. You can substitute respiratory equipment disinfectant (like Control III®) for distilled white vinegar (follow manufacturer's instructions for mixing).
2. Rinse all parts of the PARI LC PLUS thoroughly with warm tap water and air dry parts on a lint-free towel. Discard the vinegar solution when disinfection is complete.
3. Alternatively the PARI LC PLUS Reusable Nebulizer parts (except Tubing and mask) may also be disinfected by boiling them in clean pot of water for a full 5 minutes.
4. Hospitals and clinics can sterilize the PARI LC PLUS parts (except mask and Tubing) by autoclaving (a maximum of 277° F or 136° C), follow autoclave manufacturer's instructions.
5. Reassemble nebulizer when dry.

CONTROL III® IS A REGISTERED TRADEMARK OF MAR L PRODUCTS, INC.

Manufactured for:
PARI Respiratory Equipment, Inc.
2412 PARI Way, Midlothian, VA 23112 USA
Tel: 800.FAST.NEB (327.8632) and 804.253.7274
Fax: 800.727.4112 | Product.Info@PARI.com
Online at: www.PARI.com

© 2013 PARI Respiratory Equipment, Inc.
022D81-K Rev B 11-18

Reference ID: 3666579

This is a representation of an electronic record that was signed electronically and this page is the manifestation of the electronic signature.

/s/

KATHERINE A LAESSIG
12/02/2014