Record processed under FOIA #2015-10057 7/7/16

U.S. Department of Health & Human Services

Food and Drug Administration

SAVE REQUEST

USER:	(cwf)
FOLDER:	K042076 - 272 pages
COMPANY:	FUJINON, INC. (FUJINON)
PRODUCT:	DUODENOSCOPE AND ACCESSORIES, FLEXIBLE/RIGID (FDT)
SUMMARY:	Product: FUJINON G5 DUODENSCOPES; G5 DUODENOSCOPES, ED-450XT5, ED-250XT5
DATE REQUESTED:	Apr 6, 2016
DATE PRINTED:	Apr 6, 2016

Note: Printed

Questions? Contact FDA/CDRH/OCE/DID at CDRH-FOISTATUS@fda.hhs.gov or 301-796-8118

Record processed under FOIA #2015-10057 7/7/16

NOV 18 2004

K042076

510 (k) Summary

Date Prepared [21 CFR 807.92(a)(1)]

July 29, 2004 [Amended 10/27/04]

Submitter's Information [21 CFR 807.92(a)(1)]

Joseph M. Azary
C/o Fujinon Inc.
543 Long Hill Avenue
Shelton, CT. 06484

Azary Technologies has received authorization to submit this 510(k) on behalf of the sponsor Fujinon Inc., 10 High Point Drive, Wayne, NJ 07470, Establishment Registration# 2431293.

Trade Name, Common Name, Classification [21 CFR 807.92(a)(2)]

The device trade names are: Fujinon G5 Duodenoscopes

Common Name: Duodenoscopes

Classification: Class II, 21 CFR 876.1500, FAK

Predicate Device [21 CFR 807.92(a)(3)]

- Fujinon ED-400XL – K944620
- Fujinon ED-200XU – K944759

The G5 changes were described and cleared by FDA in the 510(k) submission for the Fujinon Double Balloon Enteroscopy System – K040048.

This 510(k) captures some minor design changes that have occurred during the evolution of the product line resulting in the G5 family of scopes. Although the changes are believed to be minor, the 510(k) is being submitted to account for "design creep" and to ensure that FDA has the most current information concerning the Fujinon Duodenoscopes.

The subject devices have the **same** indications for use, composition of patient contact materials, viewing direction, length, and reprocessing/sterilization method as the predicates. The subject devices use the same processors and peripherals as the predicate device.

The main differences between the subject devices and predicate devices are as follows:

- Minor differences with observation range, field of view, diameter, and bending capacity.
- The subject device includes the G5 upgrade, which is characterized by the following minor differences:
  - The L-Port has been eliminated. The L-port functioned as a lens wash port . Doctors had the option to take a syringe to inject a fluid to use it as a high pressure wash for the lens.

Questions? Contact FDA/CDRH/OCE/DID at CDRH-FOISTATUS@fda.hhs.gov or 301-796-8118

Record processed under FOIA #2015-10057 7/7/16

This function was eliminated because demand was low and it was rarely used by the surgeons.

- A G5 forceps inlet port was modified. The new port is smaller and comes with a rubber cap. The smaller port and rubber cap help increase suction and reduce leakage.
- The jet wash line check valve was removed. Internal check valves were removed to eliminate the potential for clogging and to facilitate cleaning, disinfection, and sterilization. The valves are now external and removable.
- The suction and air/water cylinders and valves were upgraded. They were updated to accommodate the new valves. The function of the valves is the same.
- Addition of the FOV, which is the rubber forceps inlet valve cover. This helps create a watertight seal when the endoscope is used.
- Upgrade to CA-500 cleaning adaptor. The cleaning adaptor allows the scope to be connected to tubes for cleaning.

Description of the Device [21 CFR 807.92(a)(4)]

The Fujinon G5 Duodenoscopes are medical endoscopes used for the visualization of the duodenum and upper digestive tract, specifically for the observation, diagnosis, and endoscopic treatment of the esophagus, stomach, and duodenum.

The G5 Duodenoscopes are offered in a 200 and 400 series. The ED-250XT5 represents the G5 Duodenoscope 200 series and the ED-450XT5 represents the G5 Duodenoscope 400 series.

The G5 Duodenoscopes include minor changes that improve the useability, ergonomics, and cleaning of the devices. The G5 scopes do not have an L-Port. The L-port functioned as a lens wash port. Doctors had the option to take a syringe to inject a fluid to use it as a high pressure wash for the lens. This function was eliminated because demand was low and it was rarely used by the surgeons.

A G5 forceps inlet port was modified. The new port is smaller and comes with a rubber cap. The new design helps increase suction and reduces leakage.

The jet wash line check valve was removed. Internal check valves were removed to eliminate the potential for clogging and to facilitate cleaning, disinfection, and sterilization. The valves are now external and removable.

The suction and air/water cylinders and valves were upgraded. They were updated to accommodate the new valves. The function of the valves is the same.

The G5 Duodenoscopes also feature the addition of the FOV, which is the rubber forceps inlet valve cover. This helps create a watertight seal when the endoscope is used. Upgrade to CA-500 cleaning adaptor. The cleaning adaptor allows the scope to be connected to tubes for cleaning.

The G5 Duodenoscopes are used with the same processors, monitors, hard copy units, and carts as the predicate devices. Each Duodenoscope is packaged in a protective carrying case with lens cleaner, silicon oil, forceps valve, waterproof cap, S connector cap, protective cap, adapters, valves, and the Operation Manual.

The Fujinon G5 Duodenoscopes are used in conjunction with other peripherals specified in the Operation Manual such as:

- Light Source

Questions? Contact FDA/CDRH/OCE/DID at CDRH-FOISTATUS@fda.hhs.gov or 301-796-8118

Record processed under FOIA #2015-10057 7/7/16

- Processor
- Cart
- Data Keyboard
- Foot Switch
- Monitor
- Video Printer
- Camera and Hard Copy Unit
- VCR
- ElectroSurgical Instruments

Specifications for ED-450XT5 and ED-250XT5

	ED-450XT5	ED-250XT5
Viewing Direction	Lateral (15 degrees retro)	Lateral (15 degrees retro)
Observation Range	3-60mm	5-60mm
Field of View	100 degrees	100 degrees
Image Size	Super Image	Super Image
Distal End Diameter	13.5mm	13.5mm
Flexible Portion Diameter	12.6mm	12.6mm
Bending Capacity UP	130 degrees	130 degrees
Bending Capacity DOWN	90 degrees	90 degrees
Bending Capacity LEFT	90 degrees	90 degrees
Bending Capacity RIGHT	110 degrees	110 degrees
Forceps Channel Diameter	4.2mm	4.2mm
Working Length	1250mm	1250mm
Total Length	1550mm	1550mm

Questions? Contact FDA/CDRH/OCE/DID at CDRH-FOISTATUS@fda.hhs.gov or 301-796-8118

Record processed under FOIA #2015-10057 7/7/16

		ED-450XT5	ED-250XT5
Material of Outer Lines (G1)		LaSf-n17	LaSf-n17
Lens Diameter (mm)		2.2	2.2
Electronic Video Imaging System	Total Pixels	411,988	411,988
	Pixels per square millimeter	83,892	83,892
	Size of Pixel (H*V mm)	0.0032*0.003725	0.0032*0.003725
	Active area of CCD chip (H*V mm)	2.458*1.840	2.458*1.840
	Type of CCD chip	Interline Color Chip	Interline Color Chip
Image Quality Resolution (lines / mm) – Near Point		15.9 lines/mm (6mm)	14.3 lines/mm (7mm)
Image Quality Resolution (lines/mm) – Far Point		2.00 lines/mm (60mm)	1.59 lines/mm (60mm)
Magnification (specify monitor size and type used for this specification)		26 (5m) at 14 inch monitor	31 (5m) at 14 inch monitor
Focal Length		1.459mm	1.459mm

Intended Use [21 CFR 807.92(a)(5)]

The device is intended for the visualization of the duodenum and upper digestive tract, specifically for the observation, diagnosis, and endoscopic treatment of the esophagus, stomach, and duodenum.

Technological Characteristics [21 CFR 807.92(a)(6)]

Fujinon, Inc. believes that the subject device is substantially equivalent to the predicate device. The subject device have the **same** indications for use, composition of patient contact material, viewing direction, length, and reprocessing/sterilization method as the predicate. The subject devices use the same processors and peripherals as the predicate devices.

The main differences are the minor changes associated with the G5 upgrade. The G5 changes were previously cleared by FDA in the 510(k) submission for the Fujinon Double Balloon Enteroscopy System – K040048.

Performance Data [21 CFR 807.92(b)(1)]

The subject device has been subjected to and passed EMC testing requirements. The patient contact materials in the Duodenoscopes are identical to the materials used in the predicate device.

Conclusion [21 CFR 807.92(b)(3)]

We believe the changes are minor and conclude that the subject devices are as safe and effective as the predicate devices.

Questions? Contact FDA/CDRH/OCE/DID at CDRH-FOISTATUS@fda.hhs.gov or 301-796-8118

Record processed under FOIA #2015-10057 7/7/16

DEPARTMENT OF HEALTH & HUMAN SERVICES

Public Health Service

Food and Drug Administration
9200 Corporate Boulevard
Rockville MD 20850

NOV 18 2004

Fujinon, Inc.
c/o Mr. Joseph M. Azary
Azary Technologies™ LLC
543 Long Hill Avenue
SHELTON CT 06484

Re: K042076
Trade/Device Name: G5 Duodenoscopes
Regulation Number: 21 CFR §876.1500
Regulation Name: Endoscope and accessories
Regulatory Class: II
Product Code: 78 FDT
Dated: October 27, 2004
Received: October 28, 2004

Dear Mr. Azary:

We have reviewed your Section 510(k) premarket notification of intent to market the device referenced above and have determined the device is substantially equivalent (for the indications for use stated in the enclosure) to legally marketed predicate devices marketed in interstate commerce prior to May 28, 1976, the enactment date of the Medical Device Amendments, or to devices that have been reclassified in accordance with the provisions of the Federal Food, Drug, and Cosmetic Act (Act) that do not require approval of a premarket approval application (PMA). You may, therefore, market the device, subject to the general controls provisions of the Act. The general controls provisions of the Act include requirements for annual registration, listing of devices, good manufacturing practice, labeling, and prohibitions against misbranding and adulteration.

If your device is classified (see above) into either class II (Special Controls) or class III (Premarket Approval), it may be subject to such additional controls. Existing major regulations affecting your device can be found in the Code of Federal Regulations, Title 21, Parts 800 to 898. In addition, FDA may publish further announcements concerning your device in the Federal Register.

Please be advised that FDA's issuance of a substantial equivalence determination does not mean that FDA has made a determination that your device complies with other requirements of the Act or any Federal statutes and regulations administered by other Federal agencies. You must comply with all the Act's requirements, including, but not limited to registration and listing (21 CFR Part 807); labeling (21 CFR Part 801); good manufacturing practice requirements as set forth in the quality systems (QS) regulation (21 CFR Part 820); and if applicable, the electronic product radiation control provisions (Sections 531-542 of the Act); 21 CFR 1000-1050.

Questions? Contact FDA/CDRH/OCE/DID at CDRH-FOISTATUS@fda.hhs.gov or 301-796-8118

Record processed under FOIA #2015-10057 7/7/16

This letter will allow you to begin marketing your device as described in your Section 510(k) premarket notification. The FDA finding of substantial equivalence of your device to a legally marketed predicate device results in a classification for your device and thus, permits your device to proceed to the market.

If you desire specific advice for your device on our labeling regulation (21 CFR Part 801), please contact the Office of Compliance at one of the following numbers, based on the regulation number at the top of this letter:

21 CFR 876.xxxx	(Gastroenterology/Renal/Urology)	240-276-0115
21 CFR 884.xxxx	(Obstetrics/Gynecology)	240-276-0115
21 CFR 892.xxxx	(Radiology)	240-276-0120
Other		240-276-0100

Also, please note the regulation entitled, "Misbranding by reference to premarket notification" (21 CFR 807.97). You may obtain other general information on your responsibilities under the Act from the Division of Small Manufacturers, International and Consumer Assistance at its toll-free number (800) 638-2041 or (301) 443-6597 or at its Internet address http://www.fda.gov/cdrh/dsma/dsmamain.html

Sincerely yours,

Nancy C. Brogdon

Nancy C. Brogdon
Director, Division of Reproductive,
Abdominal, and Radiological Devices
Office of Device Evaluation
Center for Devices and Radiological Health

Enclosure

Questions? Contact FDA/CDRH/OCE/DID at CDRH-FOISTATUS@fda.hhs.gov or 301-796-8118

Record processed under FOIA #2015-10057 7/7/16

K042076

510(k) Number (if known): K042076

Device Name: Fujinon Inc. G5 Duodenoscopes

The device is intended for the visualization of the duodenum and upper digestive tract, specifically for the observation, diagnosis, and endoscopic treatment of the esophagus, stomach, and duodenum.

(PLEASE DO NOT WRITE BELOW THIS LINE - CONTINUE ON ANOTHER PAGE IF NEEDED)

Concurrence of CDRH Office of Device Evaluation (ODE)

Prescription Use ✓ OR Over-The-Counter Use ____
(Per 21 CFR 801.109)

(Optional Format 1-2-96)

David G. Segman
(Division Sign-Off)
Division of Reproductive, Abdominal,
and Radiological Devices
510(k) Number K042076

Questions? Contact FDA/CDRH/OCE/DID at CDRH-FOISTATUS@fda.hhs.gov or 301-796-8118

Record processed under FOIA #2015-10057 7/7/16

DEPARTMENT OF HEALTH & HUMAN SERVICES

Public Health Service

Food and Drug Administration
9200 Corporate Boulevard
Rockville MD 20850

NOV 18 2004

Fujinon, Inc.
c/o Mr. Joseph M. Azary
Azary Technologies™ LLC
543 Long Hill Avenue
SHELTON CT 06484

Re: K042076
Trade/Device Name: G5 Duodenoscopes
Regulation Number: 21 CFR §876.1500
Regulation Name: Endoscope and accessories
Regulatory Class: II
Product Code: 78 FDT
Dated: October 27, 2004
Received: October 28, 2004

Dear Mr. Azary:

We have reviewed your Section 510(k) premarket notification of intent to market the device referenced above and have determined the device is substantially equivalent (for the indications for use stated in the enclosure) to legally marketed predicate devices marketed in interstate commerce prior to May 28, 1976, the enactment date of the Medical Device Amendments, or to devices that have been reclassified in accordance with the provisions of the Federal Food, Drug, and Cosmetic Act (Act) that do not require approval of a premarket approval application (PMA). You may, therefore, market the device, subject to the general controls provisions of the Act. The general controls provisions of the Act include requirements for annual registration, listing of devices, good manufacturing practice, labeling, and prohibitions against misbranding and adulteration.

If your device is classified (see above) into either class II (Special Controls) or class III (Premarket Approval), it may be subject to such additional controls. Existing major regulations affecting your device can be found in the Code of Federal Regulations, Title 21, Parts 800 to 898. In addition, FDA may publish further announcements concerning your device in the Federal Register.

Please be advised that FDA's issuance of a substantial equivalence determination does not mean that FDA has made a determination that your device complies with other requirements of the Act or any Federal statutes and regulations administered by other Federal agencies. You must comply with all the Act's requirements, including, but not limited to registration and listing (21 CFR Part 807); labeling (21 CFR Part 801); good manufacturing practice requirements as set forth in the quality systems (QS) regulation (21 CFR Part 820); and if applicable, the electronic product radiation control provisions (Sections 531-542 of the Act); 21 CFR 1000-1050.

Questions? Contact FDA/CDRH/OCE/DID at CDRH-FOISTATUS@fda.hhs.gov or 301-796-8118

Record processed under FOIA #2015-10057 7/7/16

This letter will allow you to begin marketing your device as described in your Section 510(k) premarket notification. The FDA finding of substantial equivalence of your device to a legally marketed predicate device results in a classification for your device and thus, permits your device to proceed to the market.

If you desire specific advice for your device on our labeling regulation (21 CFR Part 801), please contact the Office of Compliance at one of the following numbers, based on the regulation number at the top of this letter:

21 CFR 876.xxxx	(Gastroenterology/Renal/Urology)	240-276-0115
21 CFR 884.xxxx	(Obstetrics/Gynecology)	240-276-0115
21 CFR 892.xxxx	(Radiology)	240-276-0120
Other		240-276-0100

Also, please note the regulation entitled, "Misbranding by reference to premarket notification" (21 CFR 807.97). You may obtain other general information on your responsibilities under the Act from the Division of Small Manufacturers, International and Consumer Assistance at its toll-free number (800) 638-2041 or (301) 443-6597 or at its Internet address http://www.fda.gov/cdrh/dsma/dsmamain.html

Sincerely yours,

Nancy C. Brogdon

Nancy C. Brogdon
Director, Division of Reproductive,
Abdominal, and Radiological Devices
Office of Device Evaluation
Center for Devices and Radiological Health

Enclosure

2

Questions? Contact FDA/CDRH/OCE/DID at CDRH-FOISTATUS@fda.hhs.gov or 301-796-8118

Record processed under FOIA #2015-10057 7/7/16

K042076

510(k) Number (if known): K042076

Device Name: Fujinon Inc. G5 Duodenoscopes

The device is intended for the visualization of the duodenum and upper digestive tract, specifically for the observation, diagnosis, and endoscopic treatment of the esophagus, stomach, and duodenum.

(PLEASE DO NOT WRITE BELOW THIS LINE - CONTINUE ON ANOTHER PAGE IF NEEDED)

Concurrence of CDRH Office of Device Evaluation (ODE)

Prescription Use ✓ OR Over-The-Counter Use _____
(Per 21 CFR 801.109)

(Optional Format 1-2-96)

David G. Segman
(Division Sign-Off)
Division of Reproductive, Abdominal,
and Radiological Devices
510(k) Number K042076

3

Questions? Contact FDA/CDRH/OCE/DID at CDRH-FOISTATUS@fda.hhs.gov or 301-796-8118

Record processed under FOIA #2015-10057 7/7/16

DEPARTMENT OF HEALTH AND HUMAN SERVICES Public Health Service

Food and Drug Administration
Center for Devices and
Radiological Health
Office of Device Evaluation
Document Mail Center (HFZ-401)
9200 Corporate Blvd.
Rockville, Maryland 20850

September 14, 2004

FUJINON, INC.
C/O AZARY TECHNOLOGIES LLC
P.O. BOX 2156
HUNTINGTON, CT 06484
ATTN: JOSEPH M. AZARY

510(k) Number: K042076
Product: FUJINON G5 DUODENSCOPES; G5 DUODENOSCOPES, ED-450XT5,

Extended Until: 29-OCT-2004

Based on your recent request, an extension of time has been granted for you to submit the additional information we requested.

If the additional information is not received by the "Extended Until" date shown above your premarket notification will be considered withdrawn.

If you have procedural or policy questions, please contact the Division of Small Manufacturers International and Consumer Assistance (DSMICA) at (301) 443-6597 or at their toll-free number (800) 638-2041, or contact me at (301) 594-1190.

Sincerely yours,

Marjorie Shulman
Supervisory Consumer Safety Officer
Premarket Notification Section
Office of Device Evaluation
Center for Devices and
Radiological Health

24

Questions? Contact FDA/CDRH/OCE/DID at CDRH-FOISTATUS@fda.hhs.gov or 301-796-8118

Record processed under FOIA #2015-10057 7/7/16

Azary Technologies™, LLC

Food and Drug Administration
Document Mail Center (HFZ-401)
9200 Corporate Blvd
Rockville, MD 20850

September 8, 2004

RE: Request for Additional Information on **K042076 – Fujinon G5 Duodenoscopes**

Dear Sir/Madam:

This letter is in reference to a request from Mary Cornelius (FDA-CDRH-ODE) for additional information on 510(k) K042076.

We would like to request an extension in the time allotted for the response. The letter from FDA was dated August 30, 2004 and was received by regular mail on September 3, 2004.

Some of the requested information is being obtained from the factory in Japan, therefore we would like to request an additional 30 days to respond to be expected by September 30, 2004.

Your consideration of our request is most appreciated.

Regards,

Joseph Azary

543 Long Hill Avenue, Shelton. 06484 USA
TEL (203) 944-9320 ● FAX (203) 944-9317
EMAIL: info@azarytech.com

SK 10
25

Questions? Contact FDA/CDRH/OCE/DID at CDRH-FOISTATUS@fda.hhs.gov or 301-796-8118

Record processed under FOIA #2015-10057 7/7/16

DEPARTMENT OF HEALTH AND HUMAN SERVICES Public Health Service

Food and Drug Administration
Center for Devices and
Radiological Health
Office of Device Evaluation
Document Mail Center (HFZ-401)
9200 Corporate Blvd.
Rockville, Maryland 20850

August 30, 2004

FUJINON, INC.
C/O AZARY TECHNOLOGIES LLC
P.O. BOX 2156
HUNTINGTON, CT 06484
ATTN: JOSEPH M. AZARY

510(k) Number: K042076
Product: FUJINON G5 DUODENSCOPES; G5 DUODENOSCOPES, ED-450XT5,

We are holding your above-referenced Premarket Notification (510(k)) for 30 days pending receipt of the additional information that was requested by the Office of Device Evaluation. Please remember that all correspondence concerning your submission MUST cite your 510(k) number and be sent in duplicate to the Document Mail Center (HFZ-401) at the above letterhead address. Correspondence sent to any address other than the one above will not be considered as part of your official premarket notification submission. Also, please note the new Blue Book Memorandum regarding Fax and E-mail Policy entitled, "Fax and E-Mail Communication with Industry about Premarket Files Under Review. Please refer to this guidance for information on current fax and e-mail practices at www.fda.gov/cdrh/ode/a02-01.html.

The deficiencies identified represent the issues that we believe need to be resolved before our review of your 510(k) submission can be successfully completed. In developing the deficiencies, we carefully considered the statutory criteria as defined in Section 513(i) of the Federal Food, Drug, and Cosmetic Act for determining substantial equivalence of your device. We also considered the burden that may be incurred in your attempt to respond to the deficiencies. We believe that we have considered the least burdensome approach to resolving these issues. If, however, you believe that information is being requested that is not relevant to the regulatory decision or that there is a less burdensome way to resolve the issues, you should follow the procedures outlined in the "A Suggested Approach to Resolving Least Burdensome Issues" document. It is available on our Center web page at: http://www.fda.gov/cdrh/modact/leastburdensome.html

If after 30 days the requested information, or a request for an extension of time, is not received, we will discontinue review of your submission and proceed to delete your file from our review system. Pursuant to 21 CFR 20.29, a copy of your 510(k) submission will remain in the Office of Device Evaluation. If you then wish to resubmit this 510(k) notification, a new number will be assigned and your submission will be considered a new premarket notification submission.

Please remember that the Safe Medical Devices Act of 1990 states that you may not place this device into commercial distribution until you receive a decision letter from FDA allowing you to do so.

26

Questions? Contact FDA/CDRH/OCE/DID at CDRH-FOISTATUS@fda.hhs.gov or 301-796-8118

Record processed under FOIA #2015-10057 7/7/16

If you have procedural or policy questions, please contact the Division of Small Manufacturers International and Consumer Assistance (DSMICA) at (301) 443-6597 or at their toll-free number (800) 638-2041, or contact me at (301) 594-1190.

Sincerely yours,

Marjorie Shulman
Supervisor Consumer Safety Officer
Premarket Notification Section
Office of Device Evaluation
Center for Devices and
Radiological Health

Questions? Contact FDA/CDRH/OCE/DID at CDRH-FOISTATUS@fda.hhs.gov or 301-796-8118

Record processed under FOIA #2015-10057 7/7/16

DEPARTMENT OF HEALTH AND HUMAN SERVICES Public Health Service

Food and Drug Administration
Center for Devices and
Radiological Health
Office of Device Evaluation
Document Mail Center (HFZ-401)
9200 Corporate Blvd.
Rockville, Maryland 20850

August 02, 2004

FUJINON, INC.
C/O AZARY TECHNOLOGIES LLC
P.O. BOX 2156
HUNTINGTON, CT 06484
ATTN: JOSEPH M. AZARY

510(k) Number: K042076
Received: 02-AUG-2004
Product: FUJINON G5 DUODENSCOPES; G5 DUODENOSCOPES, ED-450XT5, ED-250XT5

The Food and Drug Administration (FDA), Center for Devices and Radiological Health (CDRH), has received the Premarket Notification you submitted in accordance with Section 510(k) of the Federal Food, Drug, and Cosmetic Act(Act) for the above referenced product. We have assigned your submission a unique 510(k) number that is cited above. Please refer prominently to this 510(k) number in any future correspondence that relates to this submission. We will notify you when the processing of your premarket notification has been completed or if any additional information is required. YOU MAY NOT PLACE THIS DEVICE INTO COMMERCIAL DISTRIBUTION UNTIL YOU RECEIVE A LETTER FROM FDA ALLOWING YOU TO DO SO.

On May 21, 2004, FDA issued a Guidance for Industry and FDA Staff entitled, "FDA and Industry Actions on Premarket Notification (510(k)) Submissions: Effect on FDA Review Clock and Performance Assessment". The purpose of this document is to assist agency staff and the device industry in understanding how various FDA and industry actions that may be taken on 510(k)s should affect the review clock for purposes of meeting the Medical Device User Fee and Modernization Act. Please review this document at http://www.fda.gov/cdrh/mdufma/guidance/1219.html.

Please remember that all correspondence concerning your submission MUST be sent to the Document Mail Center (DMC)(HFZ-401) at the above letterhead address. Correspondence sent to any address other than the one above will not be considered as part of your official premarket notification submission. Also, please note the new Blue Book Memorandum regarding Fax and E-mail Policy entitled, "Fax and E-Mail Communication with Industry about Premarket Files Under Review". Please refer to this guidance for information on current fax and e-mail practices at www.fda.gov/cdrh/ode/a02-01.html.

You should be familiar with the regulatory requirements for medical device available at Device Advice http://www.fda.gov/cdrh/devadvice/". If you have other procedural or policy questions, or want information on how to check on the status of your submission, please contact DSMICA at (301) 443-6597 or its toll-free number (800) 638-2041, or at their Internet address http://www.fda.gov/cdrh/dsmamain.html or me at (301)594-1190.

Sincerely yours,

Marjorie Shulman
Supervisory Consumer Safety Officer
Office of Device Evaluation
Center for Devices and Radiological Health

35

Questions? Contact FDA/CDRH/OCE/DID at CDRH-FOISTATUS@fda.hhs.gov or 301-796-8118

Record processed under FOIA #2015-10057 7/7/16

Form Approved:OMB No. 0910-0511 Expiration Date: August 31, 2006. See instructions for OMB Statement.

DEPARTMENT OF HEALTH AND HUMAN SERVICES
FOOD AND DRUG ADMINISTRATION
MEDICAL DEVICE USER FEE COVER SHEET

PAYMENT IDENTIFICATION NUMBER: (b)(4) [redacted]
Write the Payment Identification Number on your check.

A completed Cover Sheet must accompany each original application or supplement subject to fees. The following actions must be taken to properly submit your application and fee payment:

1. Electronically submit the completed Cover Sheet to the Food and Drug Administration (FDA) before payment is sent.
2. Include a printed copy of this completed Cover Sheet with a check made payable to the Food and Drug Administration. Remember that the Payment Identification Number must be written on the check.
3. Mail Check and Cover Sheet to the US Bank Lock Box, FDA Account, P.O. Box 956733, St. Louis, MO 63195-6733. (*Note: In no case should payment be submitted with the application.*)
4. If you prefer to send a check by a courier, the courier may deliver the check and Cover Sheet to: US Bank, Attn: Government Lockbox 956733, 1005 Convention Plaza, St. Louis, MO 63101. (Note: This address is for courier delivery only. Contact the US Bank at 314-418-4821 if you have any questions concerning courier delivery.)
5. For Wire Transfer Payment Procedures, please refer to the MDUFMA Fee Payment Instructions at the following URL: http://www.fda.gov/cdrh/mdufma/faqs.html#3a. You are responsible for paying all fees associated with wire transfers.
6. Include a copy of the completed Cover Sheet in volume one of the application when submitting to the FDA at either the CBER or CDRH Document Mail Center.

1. COMPANY NAME AND ADDRESS (Include name, street address, city, state, country, and post office code)

FUJINON INC.
10 HIGH POINT DRIVE
WAYNE, NJ 07470

1.1 EMPLOYER IDENTIFICATION NUMBER (EIN)
(b)(4) [redacted]

2. CONTACT NAME
JASON YLIZARDE

2.1 E-MAIL ADDRESS
jason.ylizarde@fujinon.com

2.2 TELEPHONE NUMBER (Include Area Code)
973-633-5600

2.3 FACSIMILE (FAX) NUMBER (Include Area Code)
973-633-8818

3. TYPE OF PREMARKET APPLICATION (Select one of the following in each column; if you are unsure, please refer to the application descriptions at the following web site: http://www.fda.gov/oc/mdufma

Select an application type:
- ☑ Premarket notification (510(k)); except for third party reviews
- ☐ Biologics License Application (BLA)
- ☐ Premarket Approval Application (PMA)
- ☐ Modular PMA
- ☐ Product Development Protocol (PDP)
- ☐ Premarket Report (PMR)

3.1 Select one of the types below:
- ☑ Original Application

Supplement Types:
- ☐ Efficacy (BLA)
- ☐ Panel Track (PMA, PMR, PDP)
- ☐ Real-Time (PMA, PMR, PDP)
- ☐ 180-day (PMA, PMR, PDP)

4. ARE YOU A SMALL BUSINESS? (See the instructions for more information on determining this status.)
- ☐ YES, I meet the small business criteria and have submitted the required qualifying documents to FDA
- ☑ NO, I am not a small business

4.1 If Yes, please enter your Small Business Decision Number:

5. IS THIS PREMARKET APPLICATION COVERED BY ANY OF THE FOLLOWING USER FEE **EXCEPTIONS?** IF SO, CHECK THE APPLICABLE EXCEPTION.
- ☐ This application is the first PMA submitted by a qualified small business, including any affiliates, parents, and partner firms
- ☐ This biologics application is submitted under section 351 of the Public Health Service Act for a product licensed for further manufacturing use only
- ☐ The sole purpose of the application is to support conditions of use for a pediatric population
- ☐ The application is submitted by a state or federal government entity for a device that is not to be distributed commercially

6. IS THIS A SUPPLEMENT TO A PREMARKET APPLICATION FOR WHICH FEES WERE WAIVED DUE TO SOLE USE IN A PEDIATRIC POPULATION THAT NOW PROPOSES CONDITION OF USE FOR ANY ADULT POPULATION? (If so, the application is subject to the fee that applies for an original premarket approval application (PMA).)

☐ YES ☑ NO

7. USER FEE PAYMENT AMOUNT SUBMITTED FOR THIS PREMARKET APPLICATION (FOR FISCAL YEAR 2004)

(b)(4) [redacted]

Form FDA 3601 (08/2003)

Check #1097

36

Questions? Contact FDA/CDRH/OCE/DID at CDRH-FOISTATUS@fda.hhs.gov or 301-796-8118

(b)(4)

[redacted]

Record processed under FOIA #2015-10057 7/7/16

6
52

FedEx Express — *USA Airbill*

FedEx Tracking Number: 8464 1788 0640

Form I.D. No.: 0215

Sender's Copy

1 From *Please print and press hard.*

Date: 7/29/04

Sender's FedEx Account Number: [redacted]

Sender's Name: Joseph Azary

Phone: (203) 944-9320

Company: AZARY TECHNOLOGIES LLC

Address: 543 LONG HILL AVE

Dept./Floor/Suite/Room

City: SHELTON

State: CT

ZIP: 06484-4808

2 Your Internal Billing Reference First 24 characters will appear on invoice.: Fujinon Duodenoscope Payment

3 To

Recipient's Name: U.S. Bank

Phone: ( )

Company: Attn. Government Lockbox 956733

Address: 1005 Convention Plaza

To "HOLD" at FedEx location, print FedEx address. We cannot deliver to P.O. boxes or P.O. ZIP codes.

Address

Dept./Floor/Suite/Room

City: St. Louis

State: MO

ZIP: 63101

NO POUCH NEEDED.
See back for peel and stick application instructions.

4a Express Package Service — *Packages up to 150 lbs.* Delivery commitment may be later in some areas.

- [ ] FedEx Priority Overnight — Next business morning
- [x] FedEx Standard Overnight — Next business afternoon
- [ ] FedEx First Overnight — Earliest next business morning delivery to select locations
- [ ] FedEx 2Day — Second business day
- [ ] FedEx Express Saver — Third business day

FedEx Envelope rate not available. Minimum charge: One-pound rate

4b Express Freight Service — *Packages over 150 lbs.* Delivery commitment may be later in some areas.

- [ ] FedEx 1Day Freight* — Next business day
- [ ] FedEx 2Day Freight — Second business day
- [ ] FedEx 3Day Freight — Third business day

* Call for Confirmation:

* Declared value limit $500

5 Packaging

- [x] FedEx Envelope*
- [ ] FedEx Pak* — Includes FedEx Small Pak, FedEx Large Pak, and FedEx Sturdy Pak
- [ ] Other

6 Special Handling — Include FedEx address in Section 3.

- [ ] **SATURDAY Delivery** Available ONLY for FedEx Priority Overnight, FedEx 2Day, FedEx 1Day Freight, and FedEx 2Day Freight to select ZIP codes
- [ ] **HOLD Weekday** at FedEx Location NOT Available for FedEx First Overnight
- [ ] **HOLD Saturday** at FedEx Location Available ONLY for FedEx Priority Overnight and FedEx 2Day to select locations

Does this shipment contain dangerous goods? One box must be checked.

- [x] No
- [ ] Yes — As per attached Shipper's Declaration
- [ ] Yes — Shipper's Declaration not required
- [ ] Dry Ice — Dry Ice, 9, UN 1845 ____ x ____ kg

Dangerous Goods (including Dry Ice) cannot be shipped in FedEx packaging.

- [ ] Cargo Aircraft Only

7 Payment *Bill to:* Enter FedEx Acct. No. or Credit Card No. below.

- [x] Sender — Acct. No. in Section 1 will be billed.
- [ ] Recipient
- [ ] Third Party
- [ ] Credit Card
- [ ] Cash/Check

FedEx Acct. No. / Credit Card No.

Exp. Date

Total Packages	Total Weight	Total Declared Value†
1		$ .00

†Our liability is limited to $100 unless you declare a higher value. See back for details.

FedEx Use Only

8 Release Signature *Sign to authorize delivery without obtaining signature.*

By signing you authorize us to deliver this shipment without obtaining a signature and agree to indemnify and hold us harmless from any resulting claims.

447

Try online shipping at fedex.com

By using this Airbill you agree to the service conditions on the back of this Airbill and in our current Service Guide, including terms that limit our liability.

Questions? Visit our Web site at fedex.com or call 1.800.Go.FedEx® 800.463.3339.

0272839070

SRS • Rev. Date 5/03 • Part #157610 • ©1994–2003 FedEx • PRINTED IN U.S.A.

Questions? Contact FDA/CDRH/OCE/DID at CDRH-FOISTATUS@fda.hhs.gov or 301-796-8118

Record processed under FOIA #2015-10057 7/7/16

K 042076

510(k) Notification

G5 Duodenoscopes

Fujinon Inc.
July 2004

FDA/CDRH/OCE/DID
2004 AUG -2 P 1:03
RECEIVED

39

Questions? Contact FDA/CDRH/OCE/DID at CDRH-FOISTATUS@fda.hhs.gov or 301-796-8118

Record processed under FOIA #2015-10057 7/7/16

Table of Contents

Tab Position	Description	First Page	Last Page
	Title Page	1	1
	Table of Contents	2	2
	Cover Letter	3	3
	Indications for Use	4	4
	Truthful and Accurate Statement	5	5
	Required Information	6	11
Annex 1	Diagrams	1-1	1-2
Annex 2	Safety Test Reports	2-1	2-15
Annex 3	Operation Manuals for EC-450XT5 and EC-250XT5	3-1	3-121
Annex 4	Cleaning/Disinfection/Storage Manual	4-1	4-52
Annex 5	Labels / Advertisement / Brochure	5-1	5-10
Annex 6	Predicate Device Documentation	6-1	6-8
Annex 7	510(k) Summary	7-1	7-4
Annex 8	Substantial Equivalence Comparison Table	8-1	8-3

Questions? Contact FDA/CDRH/OCE/DID at CDRH-FOISTATUS@fda.hhs.gov or 301-796-8118

Record processed under FOIA #2015-10057 7/7/16

K042076

TM

Azary Technologies, LLC

CDRH Document Mail Center
Document Mail Center (HFZ-401)
Center for Devices and Radiological Health
9200 Corporate Boulevard
Rockville, MD 20850

July 29, 2003

RE: FDA 510(k) Premarket Notification Fujinon– G5 Duodenoscopes

Dear Sir/Madam:

Azary Technologies LLC has been authorized to submit this 510(k) on behalf of Fujinon Inc. As required by section 510(k) of the Food, Drug and Cosmetic Act, Fujinon Inc. notifies FDA of its intention to market G5 Duodenoscopes in the United States.

Fujinon Inc. believes the enclosed information will be sufficient for the U.S. Food and Drug Administration to reach a positive substantial equivalence decision. If additional information is required, please contact me at (203) 944-9320.

Please notify me of FDA's substantial equivalence decision by facsimile at (203) 944-9317 and by mail at my letterhead address.

Thank you for your time in reviewing this notification.

Sincerely,

Joseph M. Azary

P.O. Box 2156, Huntington, CT. 06484 USA
TEL (203) 944-9320 ● FAX (203) 944-9317
EMAIL: info@azarytech.com

Questions? Contact FDA/CDRH/OCE/DID at CDRH-FOISTATUS@fda.hhs.gov or 301-796-8118

Record processed under FOIA #2015-10057 7/7/16

510(k) Number (if known): _____

Device Name: Fujinon Inc. G5 Duodenoscopes

The device is intended for the visualization of the duodenum and upper digestive tract, specifically for the observation, diagnosis, and endoscopic treatment of the esophagus, stomach, and duodenum.

(PLEASE DO NOT WRITE BELOW THIS LINE - CONTINUE ON ANOTHER PAGE IF NEEDED)

Concurrence of CDRH Office of Device Evaluation (ODE)

Prescription Use _____ OR Over-The-Counter Use _____
(Per 21 CFR 801.109)

(Optional Format 1-2-96)

Questions? Contact FDA/CDRH/OCE/DID at CDRH-FOISTATUS@fda.hhs.gov or 301-796-8118

Record processed under FOIA #2015-10057 7/7/16

PREMARKET NOTIFICATION TRUTHFUL AND ACCURATE STATEMENT

(As required by 21 CFR 807.87(j))

I certify that, in my capacity as Vice President/General Manager of Fujinon Inc., I believe, to the best of my knowledge that all data and information submitted in this pre-market notification is truthful and accurate and that no material fact has been omitted.

Signature

07/08/04
Date

Eric Knisley
Printed Name

*Must be signed by a responsible person of the firm required to submit the pre-market notification (e.g. not a consultant for the 510(k) submitter).

Questions? Contact FDA/CDRH/OCE/DID at CDRH-FOISTATUS@fda.hhs.gov or 301-796-8118

Record processed under FOIA #2015-10057 7/7/16

- Camera and Hard Copy Unit
- VCR
- ElectroSurgical Instruments

Specifications for ED-450XT5 and ED-250XT5

	ED-450XT5	ED-250XT5
Viewing Direction	Lateral (15 degrees retro)	Lateral (15 degrees retro)
Observation Range	3-60mm	5-60mm
Field of View	100 degrees	100 degrees
Image Size	Super Image	Super Image
Distal End Diameter	13.5mm	13.5mm
Flexible Portion Diameter	12.6mm	12.6mm
Bending Capacity UP	130 degrees	130 degrees
Bending Capacity DOWN	90 degrees	90 degrees
Bending Capacity LEFT	90 degrees	90 degrees
Bending Capacity RIGHT	110 degrees	110 degrees
Forceps Channel Diameter	4.2mm	4.2mm
Working Length	1250mm	1250mm
Total Length	1550mm	1550mm

Specifications for the electronic video imaging system, image quality, magnification, and focal length can be found on page 11.

Diagram of layout, interconnections, and specifications

Diagrams can be found in Annex 1.

Electrical Safety and Electromagnetic Compatibility

The device has been tested and passed electrical safety and EMC requirements utilizing EN 60601-1-2. The test results have been attached in Annex 2.

Thermal Safety

The G5 scopes have been tested to IEC 601-2-18 which includes excessive temperatures. The G5 scopes have been tested to and passed IEC 601-2-18 testing including the temperatures of parts that may come into contact with the patient or user. The temperatures of the subject device do not exceed the maximum temperatures. The test report was submitted with the Double Balloon Enteroscopy system 510(k) K040048, which included the G5 enteroscope.

Material Composition

The patient contact materials are identical to the patient contact materials in the predicate devices. The subject endoscope is composed of the same materials as the predicate device such as acrylic polyol resin, polyetherimide resin, vinyl chloride resin, polyphenylene oxide resin, polytetrafluoroethylene, polysulfone, fluorinated rubber, parafluoro rubber, silicon rubber, ethylene propylene rubber, phloro-silicon rubber, optical glass, aluminum alloy, stainless steel, brass, and epoxy adhesive.

Questions? Contact FDA/CDRH/OCE/DID at CDRH-FOISTATUS@fda.hhs.gov or 301-796-8118

Record processed under FOIA #2015-10057 7/7/16

The materials of the endoscope that make contact with the human body are optical glass, polysulfone, stainless steel, fluorinated rubber, and acrylic polyol. The materials have been previously subject to biocompatibility testing and are identical to the predicate device. Attached is an identical material certificate (Annex 2).

Reprocessing, Cleaning, Disinfection, and Sterilization

The subject devices are not supplied sterile. The device must be disinfected and sterilized in accordance with the Cleaning, Disinfection, and Sterilization manual. The methods for cleaning, disinfection, and sterilization are the identical methods described in the instructions for the predicate device.

The recommended methods for cleaning, disinfection, and sterilization have been validated and are identical to the methods recommended for the predicate device as well as several other Fujinon devices cleared by FDA. A validation certificate has been attached (Annex 2).

Proposed Labels, Labeling, Advertisements, and Directions

Annex 3 contains the draft operation manuals.

Annex 4 Cleaning, Disinfection, and Sterilization manual.

Annex 5 contains labels and a brochure for G5 Endoscopy.

Software

The subject device does not include software.

510(k) Summary of Safety and Effectiveness

510(k) Summary of Safety and Effectiveness has been attached in Annex 7.

Technological

Fujinon Inc. believes that the subject device is substantially equivalent to other devices that have previously received FDA 510(k) clearance including the predicate device.

Predicate Device

- Fujinon ED-400XL – K944620
- Fujinon ED-200XU – K944759

The G5 changes were described and cleared by FDA in the 510(k) submission for the Fujinon Double Balloon Enteroscopy System – K040048.

This 510(k) captures some minor design changes that have occurred during the evolution of the product line resulting in the G5 family of scopes. Although the changes are believed to be minor, the 510(k) is being submitted to account for "design creep" and to ensure that FDA has the most current information concerning the Fujinon Duodenoscopes.

The subject devices have the **same** indications for use, composition of patient contact materials, viewing direction, length, and reprocessing/sterilization method as the predicates. The subject devices use the same processors and peripherals as the predicate device.

The main differences between the subject devices and predicate devices are as follows:

- Minor differences with observation range, field of view, diameter, and bending capacity.

Questions? Contact FDA/CDRH/OCE/DID at CDRH-FOISTATUS@fda.hhs.gov or 301-796-8118

Record processed under FOIA #2015-10057 7/7/16

- The subject device includes the G5 upgrade, which is characterized by the following minor differences:
  - (b)(4) [redacted]
  - [redacted]
  - [redacted]
  - [redacted]
  - [redacted]
  - [redacted]
  - [redacted]

A chart comparing the subject device to the predicate device can be found in Annex 8. Additional information regarding the predicate device can be found in Annex 6.

Table of Contents

A table of contents of the Annexes is included at the beginning of this submission. The page numbers referred to in the table of contents refer to the sequentially numbered pages of this premarket notification.

Truthful and Accurate Statement

The "truthful and accurate" statement required by 21 CFR 807.87(j) is present on page 5.

Confidentiality

Fujinon Inc. considers certain information in this premarket notification outside the 510(k) summary to be confidential business information, and has taken steps to protect the release of this information. Fujinon Inc. requests FDA respect the confidentiality of this information to the extent possible under the law. We expect FDA will consult with Fujinon Inc. prior to the release of any information in this premarket notification (outside the 510(k) summary) for any reason, including requests under the Freedom of Information Act.

Questions? Contact FDA/CDRH/OCE/DID at CDRH-FOISTATUS@fda.hhs.gov or 301-796-8118

Record processed under FOIA #2015-10057 7/7/16

SPECIFICATION COMPARISON

(b)(4)

[redacted]

47

Questions? Contact FDA/CDRH/OCE/DID at CDRH-FOISTATUS@fda.hhs.gov or 301-796-8118

Record processed under FOIA #2015-10057 7/7/16

Background / Motivation for 510(k)

The motivation for submitting this 510(k) is to capture some minor design changes that have occurred during the evolution of the product line resulting in the G5 family of scopes. Although the changes are believed to be minor, the 510(k) is being submitted to account for "design creep" and to ensure that FDA has the most current information concerning the Fujinon Duodenoscopes.

Intended Use

The device is intended for the visualization of the duodenum and upper digestive tract, specifically for the observation, diagnosis, and endoscopic treatment of the esophagus, stomach, and duodenum.

No Previous NSE Decision

This device has not been the subject of a previous NSE decision.

Establishment Registration Number / Contact Person

This 510(k) is being submitted by Joseph Azary on behalf of Fujinon Inc. Joseph Azary can be contacted by telephone at (203) 944-9320 or fax at (203) 944-9317.

Fujinon Inc. (10 High Point Drive, Wayne, NJ 07470) is an FDA-registered medical device establishment under number 2431293.

Device Trade Or Proprietary Names

The device trade names are:

- Fujinon G5 Duodenoscopes
- G5 Duodenoscopes
  - ED-450XT5
  - ED-250XT5

Device Common, Usual, or Classification Names

Duodenoscope

Classification

Class II, 21 CFR 876.1500, FAK

Applicable Standards

Compliance with Section 514 of the Food, Drug and Cosmetic Act

Special controls under Section 514 of the Act have not been developed for these devices.

Conformance to voluntary standards

The subject device conforms to the following standards:

- IEC 60601-1-2
- IEC 601-2-18

Questions? Contact FDA/CDRH/OCE/DID at CDRH-FOISTATUS@fda.hhs.gov or 301-796-8118

Record processed under FOIA #2015-10057 7/7/16

Device Description

Summary of the function of the device and its major components:

The Fujinon G5 Duodenoscopes are medical endoscopes used for the visualization of the duodenum and upper digestive tract, specifically for the observation, diagnosis, and endoscopic treatment of the esophagus, stomach, and duodenum.

The G5 Duodenoscopes are offered in a 200 and 400 series. The ED-250XT5 represents the G5 Duodenoscope 200 series and the ED-450XT5 represents the G5 Duodenoscope 400 series.

The G5 Duodenoscopes include minor changes that improve the useability, ergonomics, and cleaning of the devices. The G5 scopes do not have an L-Port. The L-port functioned as a lens wash port. Doctors had the option to take a syringe to inject a fluid to use it as a high pressure wash for the lens. This function was eliminated because demand was low and it was rarely used by the surgeons.

The J-Port was repositioned. The J-Port is used as a jet water wash port. The J-Port was repositioned based on doctor feedback. The port was moved from the bottom part to the top (end) of the scope. There was also a desire to eliminate check valves to facilitate reprocessing and cleaning, as well as prevent clogging.

A G5 forceps inlet port was modified. The new port is smaller and comes with a rubber cap. The new design helps increase suction and reduces leakage.

The jet wash line check valve was removed. Internal check valves were removed to eliminate the potential for clogging and to facilitate cleaning, disinfection, and sterilization. The valves are now external and removable.

The suction and air/water cylinders and valves were upgraded. They were updated to accommodate the new valves. The function of the valves is the same.

The G5 Duodenoscopes also feature the addition of the FOV, which is the rubber forceps inlet valve cover. This helps create a watertight seal when the endoscope is used. Upgrade to CA-500 cleaning adaptor. The cleaning adaptor allows the scope to be connected to tubes for cleaning.

The G5 Duodenoscopes are used with the same processors, monitors, hard copy units, and carts as the predicate devices. Each Duodenoscope is packaged in a protective carrying case with lens cleaner, silicon oil, forceps valve, waterproof cap, S connector cap, protective cap, adapters, valves, and the Operation Manual.

The Fujinon G5 Duodenoscopes are used in conjunction with other peripherals specified in the Operation Manual such as:

- Light Source
- Processor
- Cart
- Data Keyboard
- Foot Switch
- Monitor
- Video Printer

Questions? Contact FDA/CDRH/OCE/DID at CDRH-FOISTATUS@fda.hhs.gov or 301-796-8118

Record processed under FOIA #2015-10057 7/7/16

(b)(4) Diagram

Questions? Contact FDA/CDRH/OCE/DID at CDRH-FOISTATUS@fda.hhs.gov or 301-796-8118

Record processed under FOIA #2015-10057 7/7/16

(b)(4) Diagram

Questions? Contact FDA/CDRH/OCE/DID at CDRH-FOISTATUS@fda.hhs.gov or 301-796-8118

(b)(4)

[redacted]

COPY

EMISSION -- TEST REPORT

Test Report File No. : [redacted] Date of issue: December 8, 2003

Kind of equipment	:	EVE PROCESSOR
Model	:	Σ400
Applicant	:	FUJI PHOTO OPTICAL CO., LTD.
Manufacturer	:	FUJI PHOTO OPTICAL CO., LTD.
Applicant's address	:	1-324, Uetake-cho, Kita-ku, Saitama-shi, Saitama-ken, 331-9624 Japan

Test Data measured according to the standard(s) on page 3 indicate that the test sample's electromagnetic emission(s) amplitudes :

[redacted]

This test report with appendix consists of 23 pages. The test result only responds to the tested sample. It is not allowed to copy this report even partly without the written allowance of the test laboratory. The report must not be used to claim products endorsement by the accreditation body (b)(4) [redacted] or any government agency.

(b)(4) Testing

[redacted]

Questions? Contact FDA/CDRH/OCE/DID at CDRH-FOISTATUS@fda.hhs.gov or 301-796-8118

Record processed under FOIA #2015-10057 7/7/16

(b)(4) Testing

[redacted]

(b)(4) Testing

[redacted]

(b)(4) Testing

[redacted]

(b)(4) Testing

[redacted]

Questions? Contact FDA/CDRH/OCE/DID at CDRH-FOISTATUS@fda.hhs.gov or 301-796-8118

Record processed under FOIA #2015-10057 7/7/16

Additional test report(13)

(2)資料 3/6

(b)(4) Testing

[redacted]

Questions? Contact FDA/CDRH/OCE/DID at CDRH-FOISTATUS@fda.hhs.gov or 301-796-8118

Record processed under FOIA #2015-10057 7/7/16

(b)(4) Testing

[redacted]

(b)(4) Testing

[redacted]

(b)(4) Testing

(b)(4) Testing

(b)(4) Testing

(b)(4) Testing

[redacted]

Questions? Contact FDA/CDRH/OCE/DID at CDRH-FOISTATUS@fda.hhs.gov or 301-796-8118

Record processed under FOIA #2015-10057 7/7/16

Additional test report(4)

(2)資料 3/6

(b)(4) Testing

[redacted]

Record processed under FOIA #2015-10057 7/7/16

Status
Reprocessing Instructions
Validation Certificate

The methods for cleaning, disinfection, and sterilization of the subject device are identical to the methods described for the predicate device as well as several other Fujinon devices cleared by FDA via the 510(k) process.

These methods for reprocessing have been previously validated by Fujinon.

Eric Knisley
Vice President/General Manager

07/08/04
Date

Questions? Contact FDA/CDRH/OCE/DID at CDRH-FOISTATUS@fda.hhs.gov or 301-796-8118

Record processed under FOIA #2015-10057 7/7/16

IDENTICAL MATERIALS CERTIFICATION

I certify that, in my capacity as (title) Product Manager of (company name) Fujinon Inc,

I believe, to the best of my knowledge, that the materials used in the

subject device Fujinon G5 Duodenoscopes are identical to

those found in the predicate device Fujinon ED-400XL (K944620) and ED-200XU (K944759).

Signature

7/27/2004
Date

JASON YLIZARDE
Printed Name

TOTAL P.01

Questions? Contact FDA/CDRH/OCE/DID at CDRH-FOISTATUS@fda.hhs.gov or 301-796-8118

FUJINON

DRAFT

Duodeno Electronic Video Endoscopes

ED-450XT5

OPERATION MANUAL

(Preparation and Operation)

Thank you for purchasing our product. Read this manual carefully before use to avoid unexpected accidents, and take full advantage of the product's capabilities.

Questions? Contact FDA/CDRH/OCE/DID at CDRH-FOISTATUS@fda.hhs.gov or 301-796-8118

Record processed under FOIA #2015-10057 7/7/16

Important Safety Information

1. Intended Use

This product is a medical Endoscope for the duodenum and upper G.I. tract. It is intended for observation, diagnosis, and endoscopic treatment of the esophagus, stomach and duodenum. Never use this product for any other purposes.

2. Safety

Read and understand this manual carefully before use. Use the Endoscope by following the provided instructions. Items important for the safe use of the Endoscope are summarized in Chapter 1 "Safety."
Safety precautions associated with individual operations or procedures are provided separately, indicated by "▲ WARNING" or "▲ CAUTION."

3. Warning

Items that must be observed for safety when performing endoscopy or electrosurgery are identified by "▲ WARNING" or "▲ CAUTION." Perform procedures correctly by reading and understanding the warning information carefully.

▲ WARNING

Improper use or operation of the equipment may injure patients, physicians, or people in the vicinity.

Read and understand this manual carefully before operating the equipment.

Improper operations that will damage the equipment only are identified by "CAUTION."

Questions? Contact FDA/CDRH/OCE/DID at CDRH-FOISTATUS@fda.hhs.gov or 301-796-8118

Record processed under FOIA #2015-10057 7/7/16

4. About Clinical Procedures

This manual assumes that the product will be used by medical specialists who have received proper training in endoscopic procedures. It does not provide information about clinical procedures. Regarding clinical procedures, use proper clinical judgment.

5. When Using the Endoscope for the First Time

This product has not been sterilized. When using it for the first time, use the level of disinfection or sterilization suitable to the application, in accordance with Chapter 8 "Washing," Chapter 9 "Chemical Disinfection," and Chapter 10 "Gas Sterilization."

6. Treatment with Electrosurgical Instruments

Before electrosurgery, basic in vitro experiments must be performed to learn how to tighten the snare properly, the feeling of the Papillotomy knife being pulled and how repeated use affects the cutting quality of instruments.

7. Operation of Endoscope

Endoscope is a precision instrument. Unnatural force or impact on its insertion portion, flexible portion, or distal end may not only damage the instrument but also injure the inside of the patient. If you encounter any resistance, insert or operate it slowly. Do not force it in.

8. Handling of Endoscope

When holding Endoscope, make sure to hold it by the control portion. Handling it up by the insertion portion or LG flexible portion is difficult to hold and may exert an unnatural force, resulting in instrument failure.

Questions? Contact FDA/CDRH/OCE/DID at CDRH-FOISTATUS@fda.hhs.gov or 301-796-8118

Record processed under FOIA #2015-10057 7/7/16

Contents

(Preparation and Operation)

Important Safety Information 2

Preface 6

Conventions Used in This Manual 6

Chapter 1 Safety 1-1

Chapter 2 Composition of 400 System Endoscope Set and System Configuration .. 2-1
- 2.1 Composition of 400 System Endoscope Set 2-2
- 2.2 Standard System Configuration 2-3
- 2.3 Extended System Configuration 2-4

Chapter 3 Names and Functions of Parts 3-1

Chapter 4 Control Portion 4-1
- 4.1 How to Operate the Bending Mechanism 4-2
- 4.2 Valve Control Buttons and Forceps Inlet 4-4
- 4.3 Remote Operating Switches 4-5
- 4.4 How to Operate Forceps Elevator Mechanism 4-6

Chapter 5 Preparation for Use of the EVE Endoscope 5-1
- 5.1 Preparing Equipment 5-2
- 5.2 Connecting the Endoscope 5-3
- 5.3 Inspection of Endoscope 5-5
- 5.4 Inspection of Forceps 5-9

Chapter 6 Method of Use 6-1
- 6.1 Preparation 6-2
- 6.2 Insertion and Observation 6-3
- 6.3 Biopsy 6-6
- 6.4 ERCP 6-8
- 6.5 Pulling Out the Endoscope 6-10

Chapter 7 Image Recording 7-1
- 7.1 Taking Photographs 7-2
- 7.2 Printout Using the Video Printer 7-3
- 7.3 Recording Using a Video Cassette Recorder 7-4

Appendix Appendix-1
- Main Specifications Appendix-2
- Warranty and After-Sales Service Appendix-5
- Index Appendix-6

Questions? Contact FDA/CDRH/OCE/DID at CDRH-FOISTATUS@fda.hhs.gov or 301-796-8118

Record processed under FOIA #2015-10057 7/7/16

(Cleaning, Disinfection and Storage)

Chapter 8 Washing 8-1
8.1 Methods of Washing 8-2
8.2 Conditions of Washing 8-3
8.3 Necessary Equipment and Materials 8-4
8.4 First Washing 8-6
8.5 Second Washing 8-8

Chapter 9 Chemical Disinfection 9-1
9.1 Methods of Chemical Disinfection 9-2
9.2 Conditions of Disinfection 9-3
9.3 Chemical Disinfection of Endoscope 9-4
9.4 Washing Endoscope by Water 9-6
9.5 Washing and Disinfecting Air/Water Button, Suction Button, J Piping, Cleaning Brush and Distal End Cap 9-10
9.6 Washing and Disinfecting Biopsy Forceps 9-11
9.7 Washing and Disinfecting Water Tank and Mouthpiece 9-12

Chapter 10 Gas Sterilization 10-1
10.1 Conditions of Gas Sterilization 10-2
10.2 EOG (Ethylene Oxide Gas) Sterilization 10-4

Chapter 11 Storage 11-1

(Electrosurgical Instruments)

Chapter 12 Treatment with Electrosurgical Instruments 12-1
12.1 Preparing and Inspecting Equipment and Materials 12-2
12.2 Polypectomy 12-7
12.3 Papillotomy 12-11

Questions? Contact FDA/CDRH/OCE/DID at CDRH-FOISTATUS@fda.hhs.gov or 301-796-8118

Record processed under FOIA #2015-10057 7/7/16

Preface

This manual describes how to use Duodeno EVE Endoscopes.

Regarding their use, this manual describes endoscopic observation of the duodenum, tissue sampling with biopsy forceps and ERCP with cannulation tube. It also explains taking photographs, printing and VCR image recording during endoscopic observation.

These Endoscopes are used in combination with the processor "VP-402," the light source "XL-402", cart and video printer, etc.
For information on how to use the processor, light source and video printer, etc., refer to the respective operation manuals.

Conventions Used in This Manual

This manual uses the following conventions to make it easy to understand operations.

■General conventions

Convention	Meaning
⚠	Indicates a potential danger that may harm to people.
⚠WARNING	Explains the dangerous conditions that may cause to death or serious accident unless it is avoided.
⚠CAUTION	Explains the conditions that may cause to light or medium injury unless it is avoided.
CAUTION	Explains the conditions that may damage to equipment unless it is avoided.
(1), (2), (3), ···	Consecutive numbers in operating procedures indicate the sequence of successive operations.
[Note]	Indicates a comment or supplementary information.
→	Indicates a reference.

Questions? Contact FDA/CDRH/OCE/DID at CDRH-FOISTATUS@fda.hhs.gov or 301-796-8118

Record processed under FOIA #2015-10057 7/7/16

Chapter 1 Safety

This chapter summarizes the information necessary for safe use of Endoscope.

Questions? Contact FDA/CDRH/OCE/DID at CDRH-FOISTATUS@fda.hhs.gov or 301-796-8118

Record processed under FOIA #2015-10057 7/7/16

Chapter 1 Safety

1. Precautions in Using Endoscope

1) Inspection before use

Make sure to inspect the equipment before use according to the procedures provided in this manual, to avoid unexpected accidents, and take full advantage of the equipment's capabilities.
If the inspection result shows any abnormality, do not use the same equipment.

2) Combination of equipment

The Endoscope may be used in combination with peripherals. To avoid an electric shock accident, do not use any peripherals than the ones specified in this operation manual.

3) Maintenance

The equipment will wear out and degrade after repeated use for a long period. Have it checked by specialists once every six months or once every 100 cases. Also have it checked if there is anything wrong with the equipment.
Do not disassemble or modify the equipment.

2. Washing and Disinfection

This product has not been sterilized. When using it for the first time, perform disinfection or sterilization suitable for the application.
When reusing it, wash and disinfect it according to the procedures in the manual (Cleaning, Disinfection and Storage). Inadequate washing may result in infection. Wash the insertion portion and channels especially carefully.
Wear rubber gloves during chemical washing and disinfection to protect your skin and to prevent infection.

3. "▲ Warning" and "▲ Caution" Messages Appearing in Individual Chapters

Chapter 5 Preparation for Use of the EVE Endoscope

The use of abnormal equipment will cause wrong diagnosis or injury. If the inspection result shows any abnormality, do not use the same equipment.

5.2 Connecting the Endoscope

Touching the LG connector with hands immediately after use of the Endoscope may cause to burn. Do not touch the LG connector tip until it will be cooled down (5 minutes).

Questions? Contact FDA/CDRH/OCE/DID at CDRH-FOISTATUS@fda.hhs.gov or 301-796-8118

Record processed under FOIA #2015-10057 7/7/16

Endoscope may be adhered to mucous membrane, resulting in damage to the mucous membrane. Set a suction pressure at 53kPa or less.

5.3.5 Inspecting Objective Lens

Viewing the light of light guide directly may damage your eyes. Switch off the light before inspecting the lens.

Chapter 6 Method of Use

6.2 Insertion and Observation

Energy of illumination may burn. Do not allow the distal end to touch the same part for 5 minutes or more.

6.3 Biopsy

Pressing forceps strongly against the digestive tract wall may damage it. Do not press them the digestive tract wall with undue force.

6.4 ERCP

Pressing the cannulation tube strongly against the digestive tract wall may damage it. Do not press it against digestive tract wall with undue force.

Chapter 8 Washing

8.5 Second Washing

Touching the LG connector with hands immediately after use of the Endoscope may cause to burn. Do not touch the LG connector tip until it will be cooled down (5 minutes).

8.5.10 Washing Entire Endoscope

Cleaning liquid might flow into a patient's body. Alter cleaning, wash away any remaining chemical with water.

Chapter 9 Chemical Disinfection

9.6.1 Injecting Clean Water

Disinfecting liquid might flow into a patient's body. Alter immersing into chemical solution, wash away any remaining chemical liquid with clean water.

Chapter 10 Gas Sterilization

Applying gas sterilization to wet parts presents incomplete sterilization. Proceed gas sterilization after vaporizing water out of Endoscope.

Gas remaining in Endoscope after gas sterilization is harmful to human body. Proceed aeration after gas sterilization.

Chapter 11 Storage

Storage of Endoscope in a carrying case may cause infection. Do not store Endoscope in a carrying case.

Questions? Contact FDA/CDRH/OCE/DID at CDRH-FOISTATUS@fda.hhs.gov or 301-796-8118

Record processed under FOIA #2015-10057 7/7/16

Chapter 12 Treatment with Electrosurgical Instruments

12.1 Preparing and Inspecting Equipment and Materials

The operation of the pacemaker will be malfunctioned by the electrosurgical instruments. Always keep pacemaker users away from electrosurgical instruments.

Ignition and explosion may be occurred. Replace any flammable gas in body cavities with nonflammable gas before using the electrosurgical instruments. Never use the electrosurgical instruments in atmosphere of flammable gas.

12.1.3 Connecting Electrosurgical Instruments

Wrong connection will cause electric shock accident and burns. Connect surgical instruments correctly in accordance with the operation manual.

12.1.4 Setting the Conditions of Surgery

Leakage current may cause burns. Operate the instruments within specified output range.

12.2 Polypectomy

Ignition and explosion may be occurred. Replace any flammable gas in body cavities with nonflammable gas before using the electrosurgical instruments.

Leakage current may cause burns. Prevent patient's body from touching electric conductor such as metal part of bed. Physicians and assistants should wear rubber gloves.

12.3 Papillotomy

Ignition and explosion may be occurred. Replace any flammable gas in body cavities with nonflammable gas before using the electrosurgical instruments.

Leakage current may cause burns. Prevent patient's body from touching electric conductor such as metal part of bed. Physicians and assistants should wear rubber gloves.

Questions? Contact FDA/CDRH/OCE/DID at CDRH-FOISTATUS@fda.hhs.gov or 301-796-8118

Record processed under FOIA #2015-10057 7/7/16

Chapter 2 Composition of 400 System Endoscope Set and System Configuration

This chapter describes the composition of 400 System Endoscope set and system configuration.

2.1 Composition of 400 System Endoscope Set 2-2
2.2 Standard System Configuration 2-3
2.3 Extended System Configuration 2-4

Questions? Contact FDA/CDRH/OCE/DID at CDRH-FOISTATUS@fda.hhs.gov or 301-796-8118

Record processed under FOIA #2015-10057 7/7/16

Chapter 2 Composition of 400 System Endoscope Set and System Configuration

2.1 Composition of 400 System Endoscope Set

The 400 System Endoscope set is provided in a carrying case. The set consists of the following items.

[Note] Figures in parentheses indicate quantities.

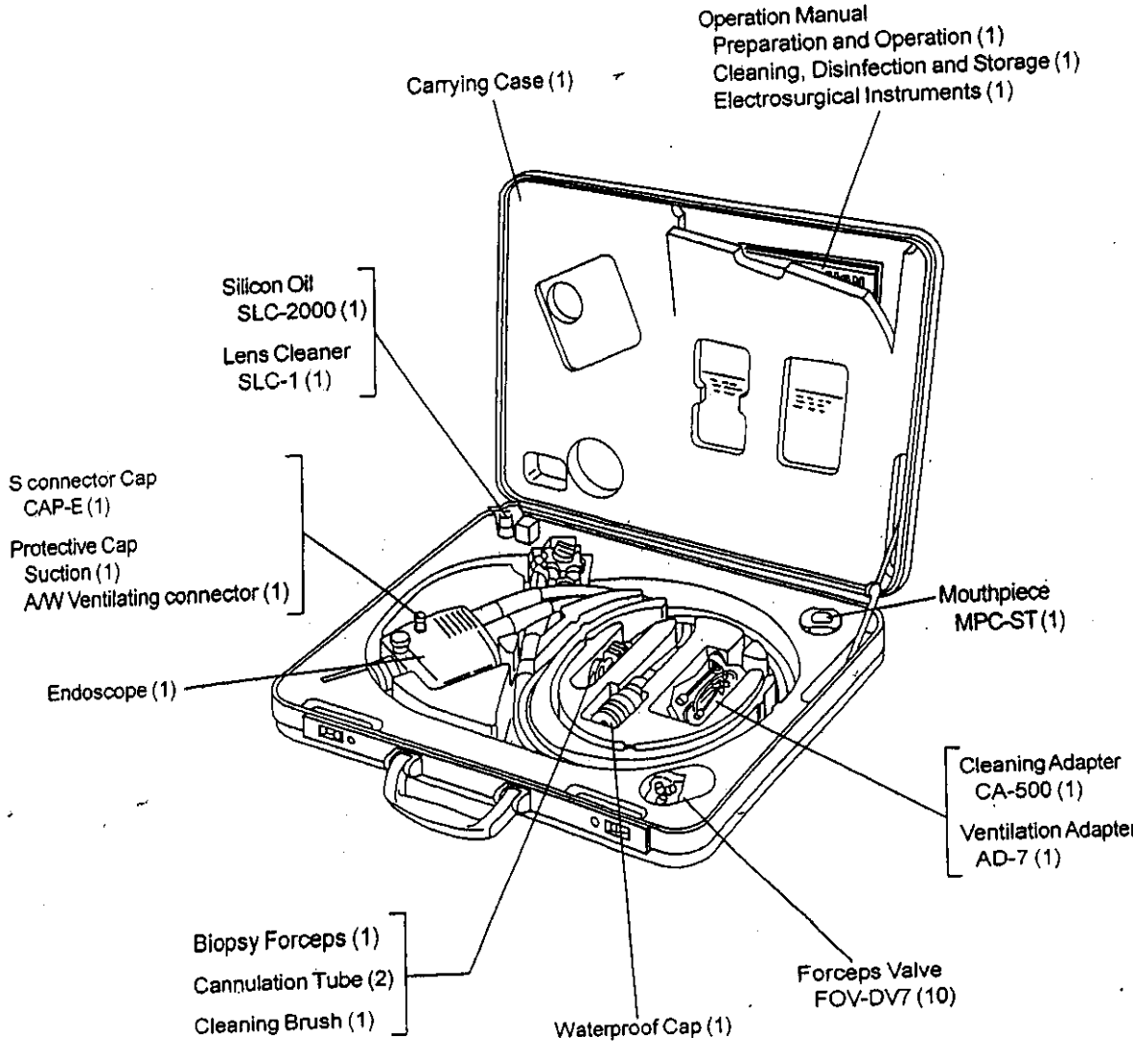

78

Questions? Contact FDA/CDRH/OCE/DID at CDRH-FOISTATUS@fda.hhs.gov or 301-796-8118

Record Processed under FOIA #2015-10057 7/7/16

You may use the 400 System Endoscope with various peripherals attached to it. These peripherals are available separately.

2.2 Standard System Configuration

The standard system configuration is the minimum configuration normally required for endoscopy. This system allows observation (diagnosis) and biopsy to be performed on the monitor.

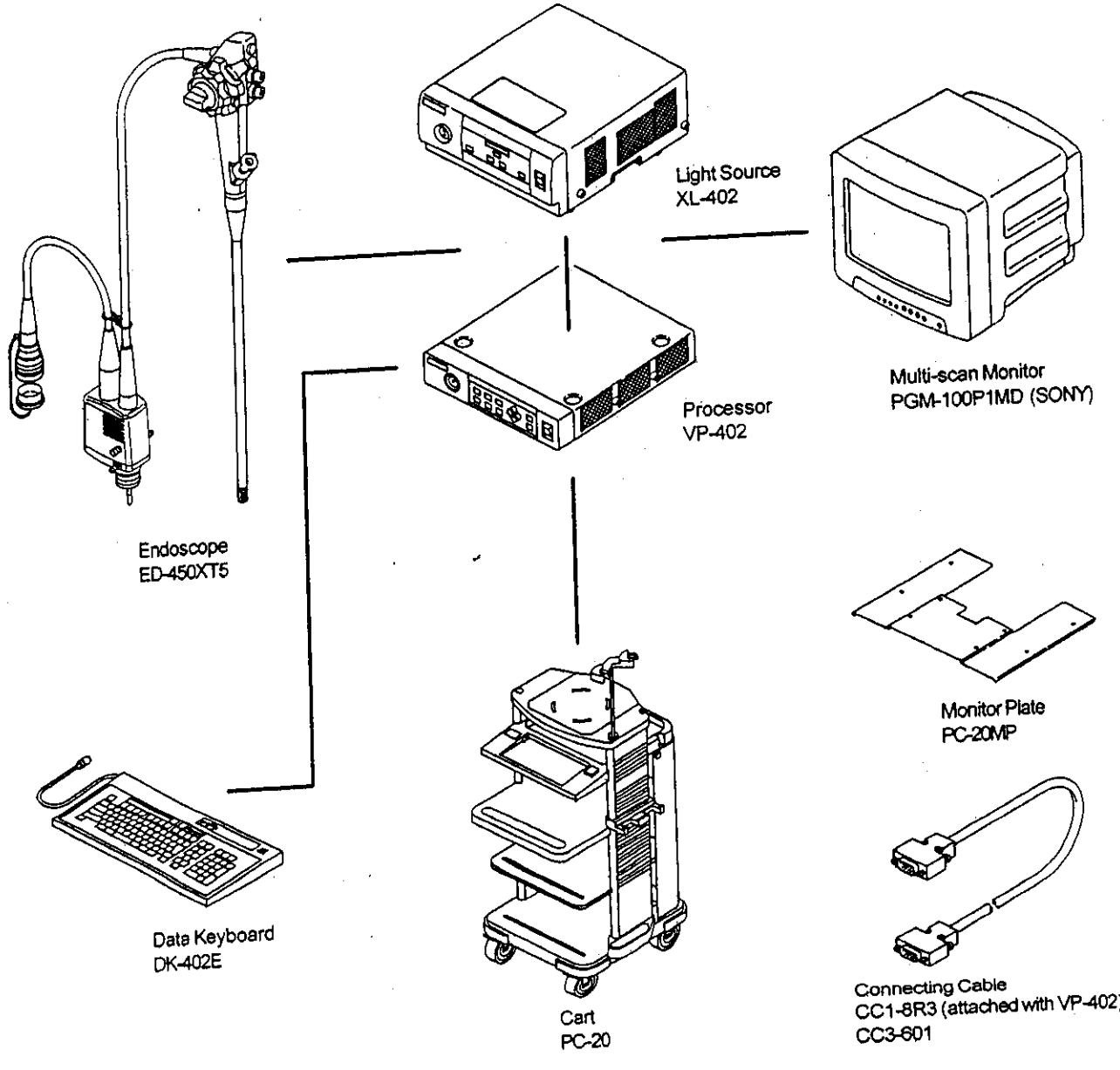

Questions? Contact FDA/CDRH/OCE/DID at CDRH-FOISTATUS@fda.hhs.gov or 301-796-8118

Record processed under FOIA #2015-10057 7/7/16

8C

Questions? Contact FDA/CDRH/OCE/DID at CDRH-FOISTATUS@fda.hhs.gov or 301-796-8118

Record processed under FOIA #2015-10057 7/7/16

2.3 Extended System Configuration

You can extend the 400 System by connecting various equipment to the standard configuration. Extension makes the following possible.

- Endoscopic treatment
- Ultrasonography through forceps channel
- Recording of Video images
- Printer output

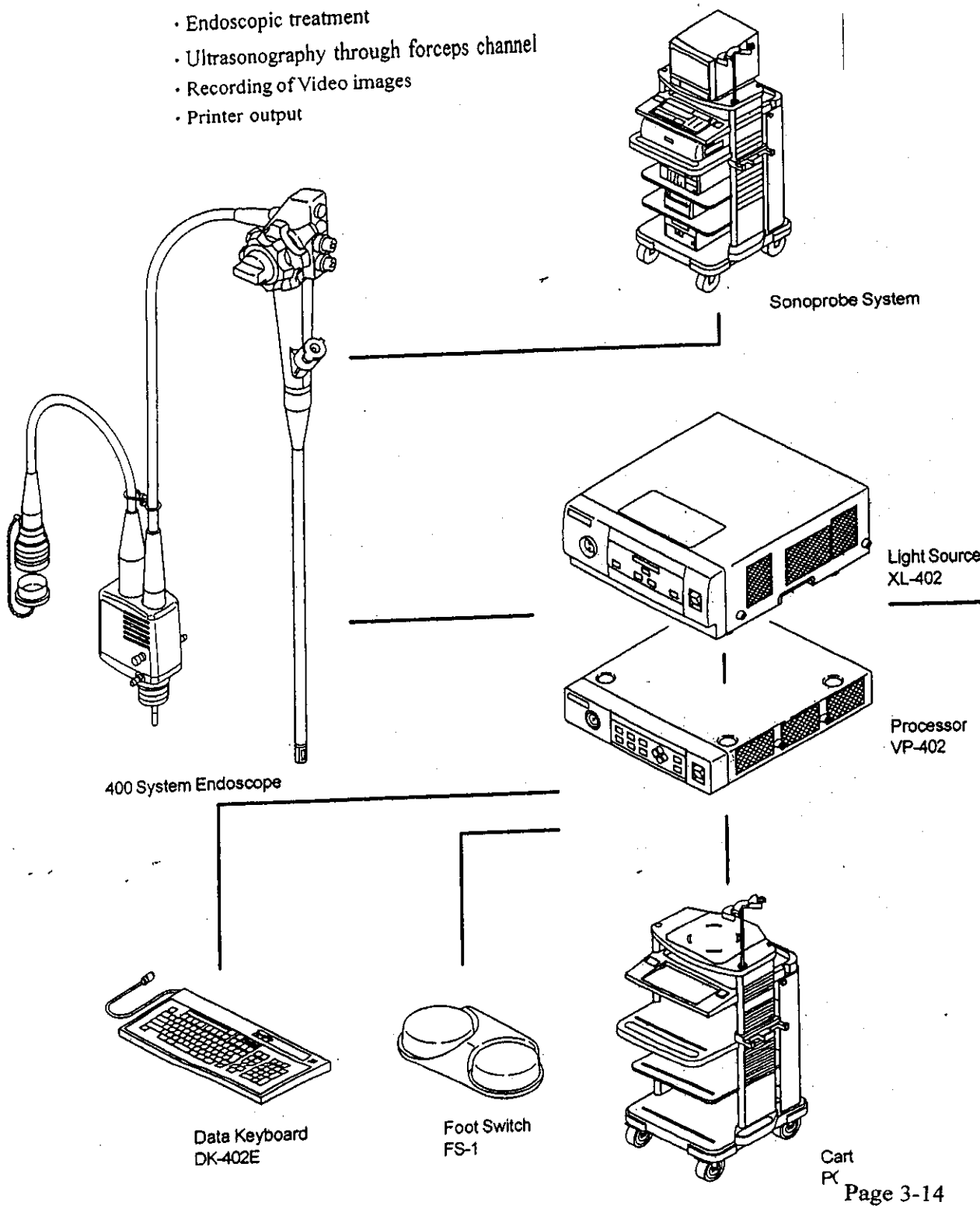

81

Questions? Contact FDA/CDRH/OCE/DID at CDRH-FOISTATUS@fda.hhs.gov or 301-796-8118

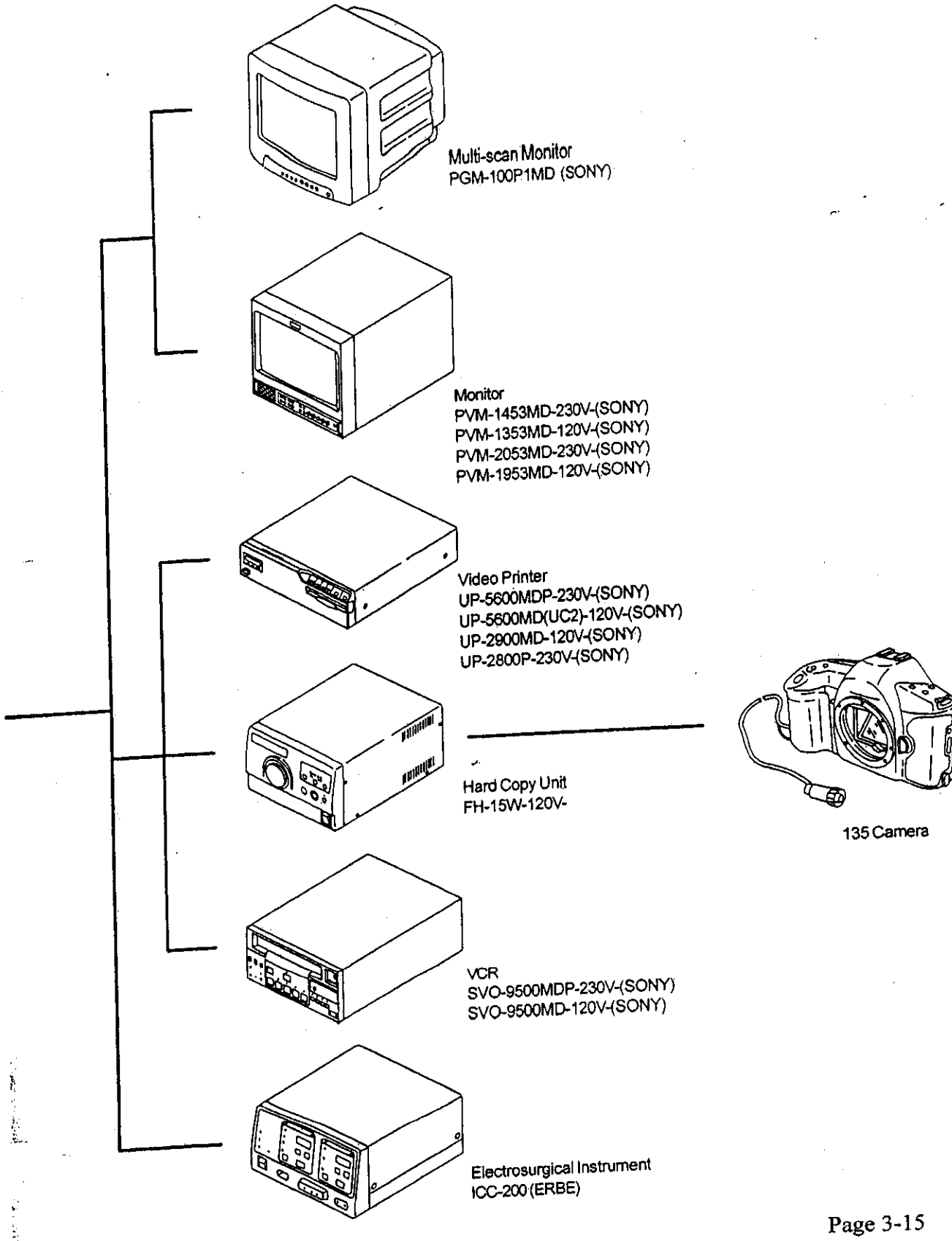

82

Questions? Contact FDA/CDRH/OCE/DID at CDRH-FOISTATUS@fda.hhs.gov or 301-796-8118

Record processed under FOIA #2015-10057 7/7/16

Enlarged view of distal end

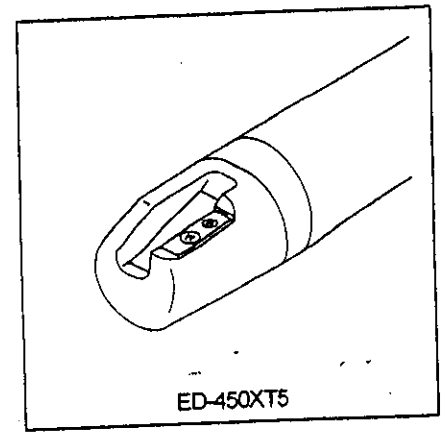

* Insertion portion

This portion is inserted into body cavities and contains the distal end, bending portion and flexible portion.

Distal end *

Contains objective lens, air/water supply nozzles, forceps channel, etc. air/water supply and suction are controlled by buttons on the control portion.

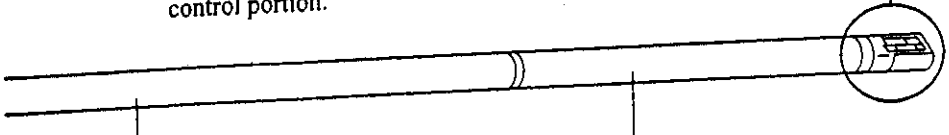

Flexible portion *

Connects bending portion and control portion.
The Endoscope can be inserted into the body cavity up to this portion.

Bending portion *

Bend this portion with the knobs on the control portion.

LG connector

This connector connects to the scope socket on the light source.

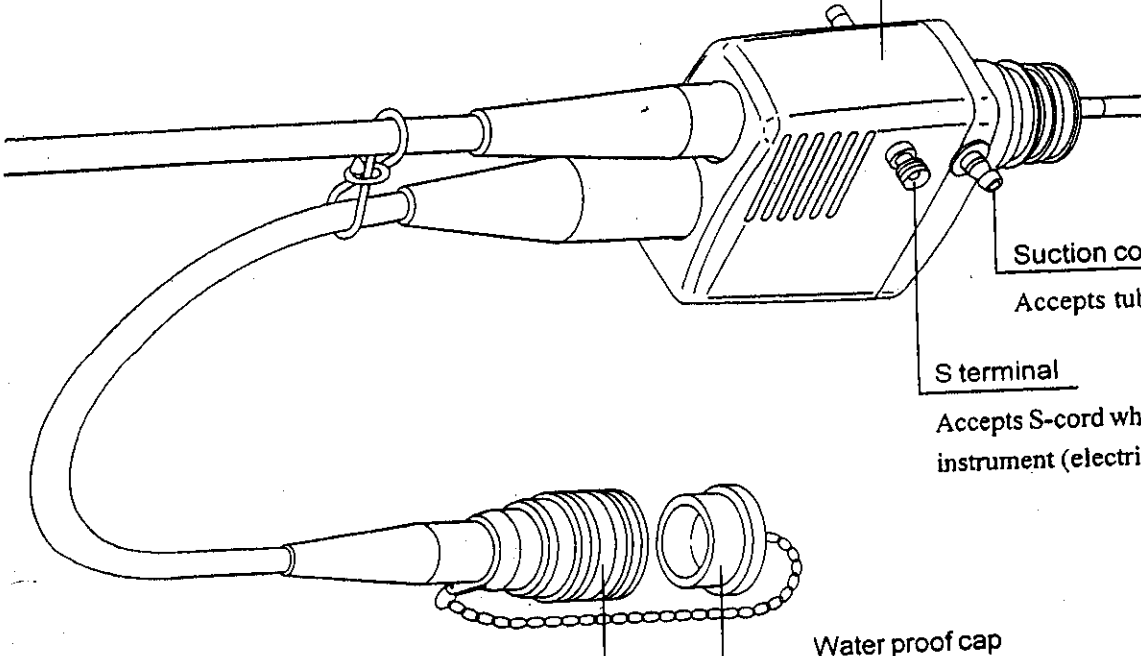

Suction connector

Accepts tube from suction unit.

S terminal

Accepts S-cord when using electrosurgical instrument (electric cautery).

EVE connector

This connector connects to the EVE connector socket on the processor.

Water proof cap

Prevent water from remaining on electric contact.

83

Questions? Contact FDA/CDRH/OCE/DID at CDRH-FOISTATUS@fda.hhs.gov or 301-796-8118

Record processed under FOIA #2015-10057 7/7/16

Chapter 3 Names and Functions of Parts

This chapter describes the names and functions of 400 System Endoscope parts as well as the composition of the main body.

Questions? Contact FDA/CDRH/OCE/DID at CDRH-FOISTATUS@fda.hhs.gov or 301-796-8118

Record processed under FOIA #2015-10057 7/7/16

Chapter 3 Names and Functions of Parts

The main body of the 400 System Endoscope consists of the following parts.

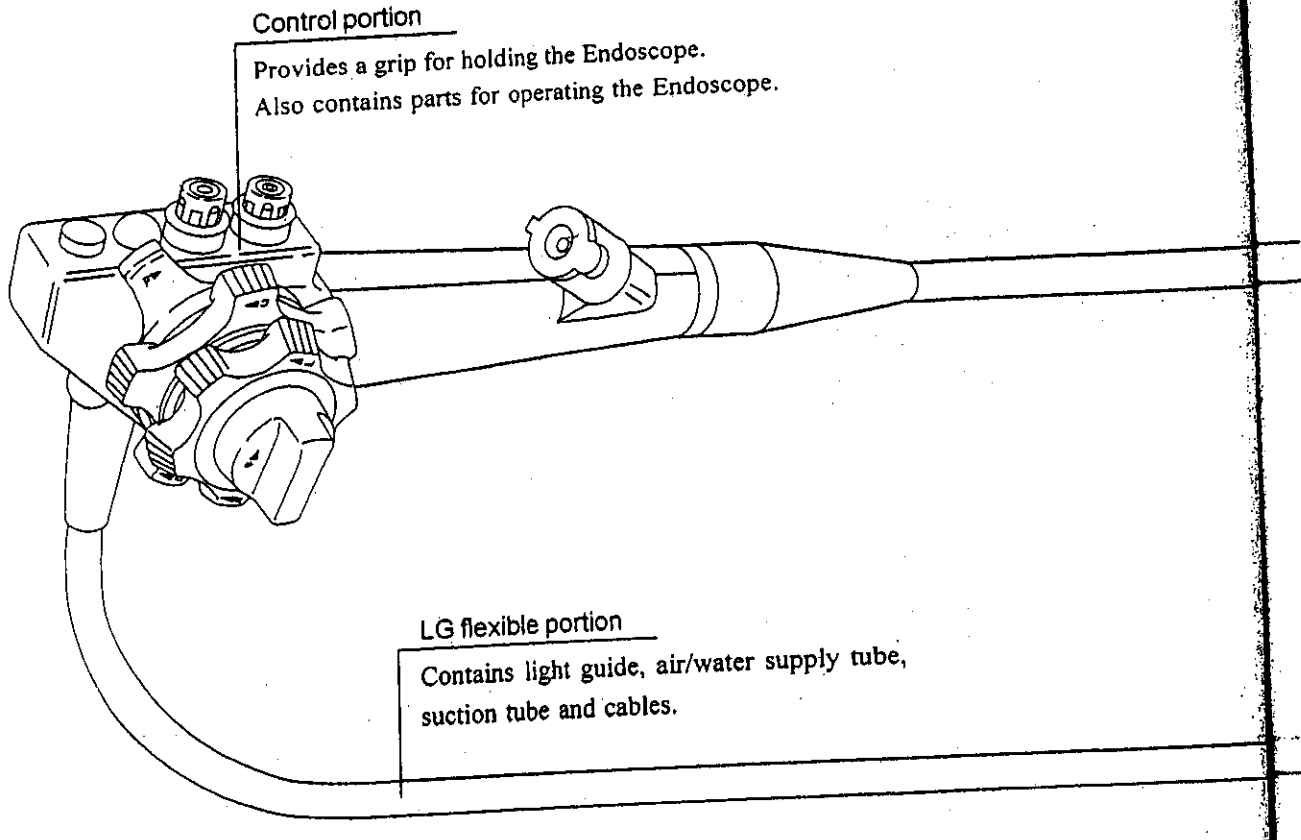

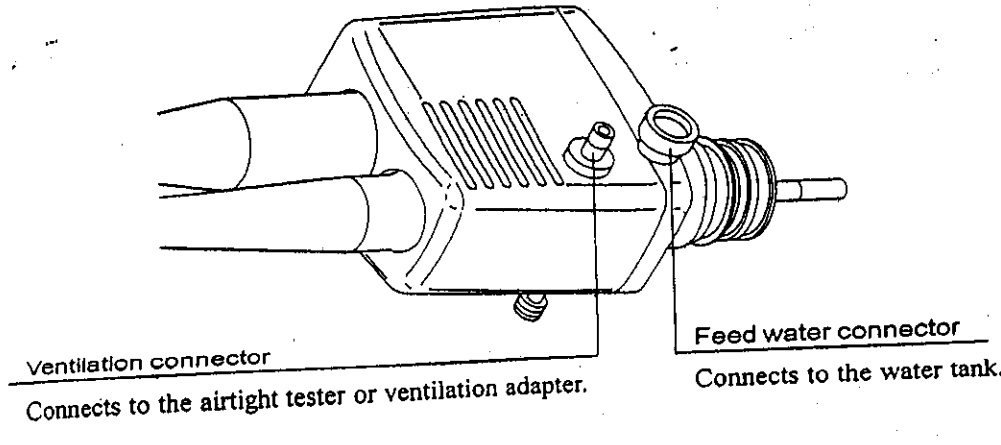

Questions? Contact FDA/CDRH/OCE/DID at CDRH-FOISTATUS@fda.hhs.gov or 301-796-8118

Record processed under FOIA #2015-10057 7/7/16

Chapter 4 Control Portion

The control portion contains the angle knobe for operating the bending mechanism and valves for air/water supply and suction, etc.
This chapter describes the operations and functions of these parts.

4.1 How to Operate the Bending Mechanism 4-2
4.2 Valve Control Buttons and Forceps Inle 4-4
4.3 Remote Operating Switches 4-5
4.4 How to Operate Forceps Elevator Mechanism 4-6

Questions? Contact FDA/CDRH/OCE/DID at CDRH-FOISTATUS@fda.hhs.gov or 301-796-8118

Record processed under FOIA #2015-10057 7/7/16

napter 4 Control Portion

4.1 How to Operate the Bending Mechanism

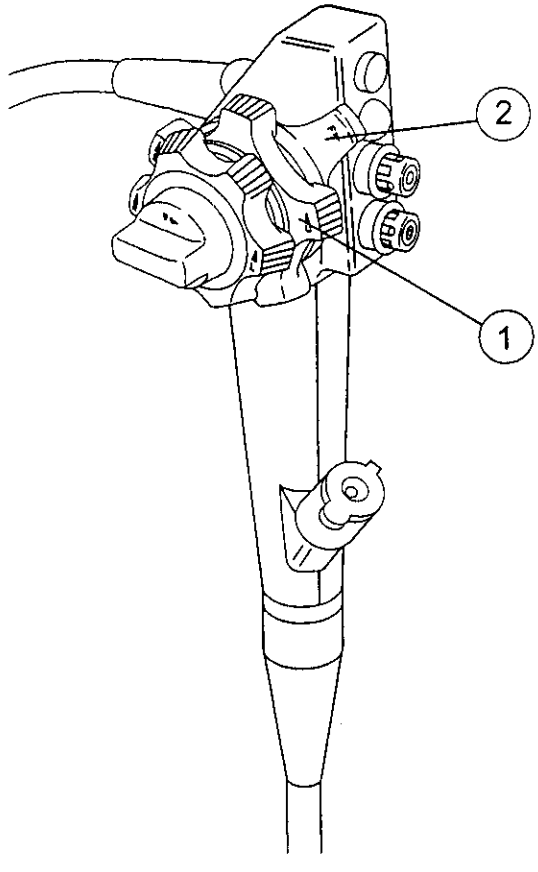

① Up-down angle knob

To bend the bending portion upward and downward.

<When up-down locking lever is slanted toward F ► >

Turn the up-down angle knob in the direction of U ► to bend the bending portion upward. Turn it in the direction of D ► to bend the bending portion downward.

Release the up-down angle knob to unlock the bending portion. It will unbend a little.

<When up-down locking lever is slanted in the direction opposite to F ► >

Release the up-down angle knob to lock the bending portion. It will remain bent.

② Up-down locking lever

Used to retain the bent state of the bending portion. It switches between Lock and Unlock. Slant this lever in the direction opposite to F ► to lock the bending portion. Slant it in the direction of F ► to unlock the bending portion.

Operate this lever either before or after operating the up-down angle knob.

[Note]

Lock : retains bent state of bending portion.

Unlock : allows external force to bend bending portion freely.

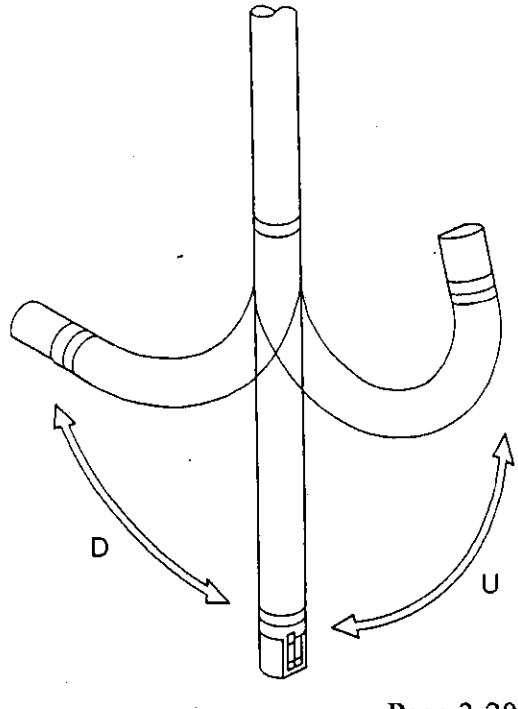

Questions? Contact FDA/CDRH/OCE/DID at CDRH-FOISTATUS@fda.hhs.gov or 301-796-8118

Record processed under FOIA #2015-10057 7/7/16

2 Valve Control Buttons and Forceps Inlet

⑤ Suction button

Allows aspiration through forceps channel (port) in distal end.
Suction is activated while this button is depressed.

⑥ Air/water button

Used to blow air or water onto the surface of objective lens from the nozzle in distal end.
To supply air, stop the hole in the center of this button with a finger.
To supply water, just depress this button.

⑦ Forceps inlet

Opening for passing through endoscopic accessory.
Normally, the forceps valve is attached.

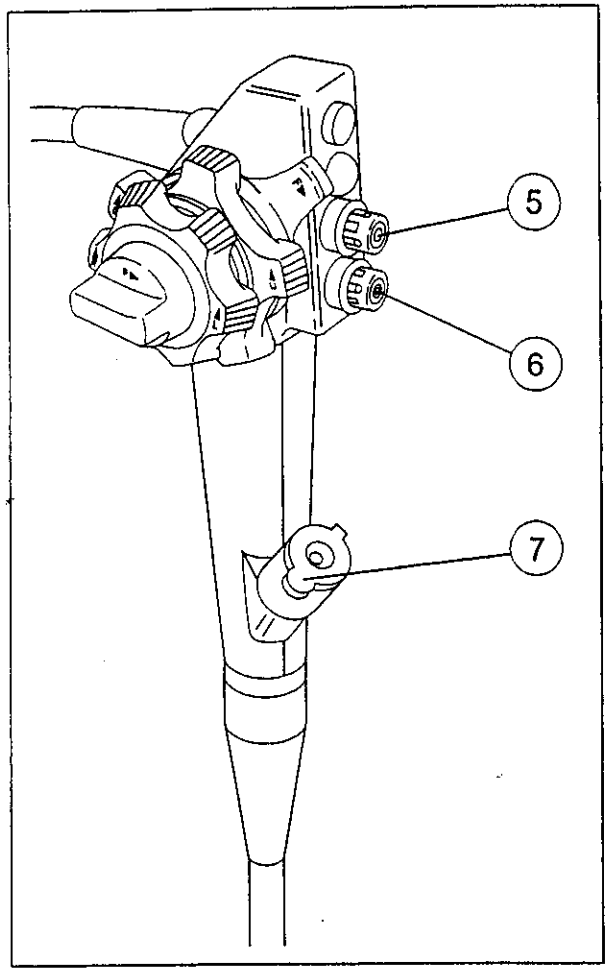

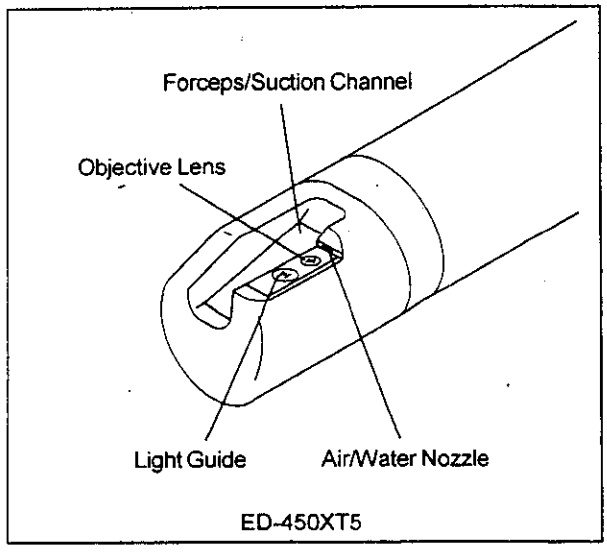

Questions? Contact FDA/CDRH/OCE/DID at CDRH-FOISTATUS@fda.hhs.gov or 301-796-8118

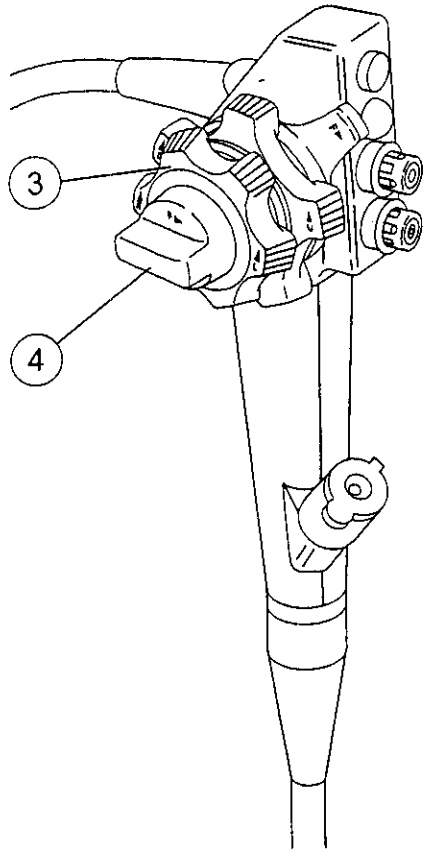

③ Left-right angle knob

To bend the bending portion right or left.

<When left-right locking knob is turned forward F ► >

Turn the left-right angle knob in the direction of L ► to bend the bending portion to the left. Turn it in the direction of R ► to bend the bending portion to the right.
Release the left-right angle knob to unlock the bending portion. It will unbend a little.

<When the left-right locking knob is turned in the direction opposite to F ► >

Release the left-right angle knob to lock the bending portion. It will remain bent.

④ Left-right locking knob

To retain the bent state of the bending portion. It switches between Lock and Unlock.
Turn this knob in the direction opposite to F ► locks the bending portion. Turning it in the direction of F ► unlocks the bending portion.
Operate this knob either before or after operating the left-right angle knob.

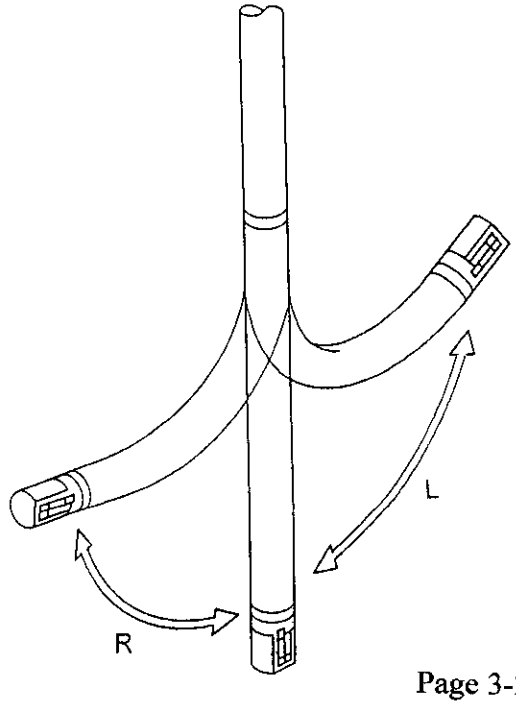

89

Questions? Contact FDA/CDRH/OCE/DID at CDRH-FOISTATUS@fda.hhs.gov or 301-796-8118

Record processed under FOIA #2015-10057 7/7/16

4 How to Operate Forceps Elevator Mechanism

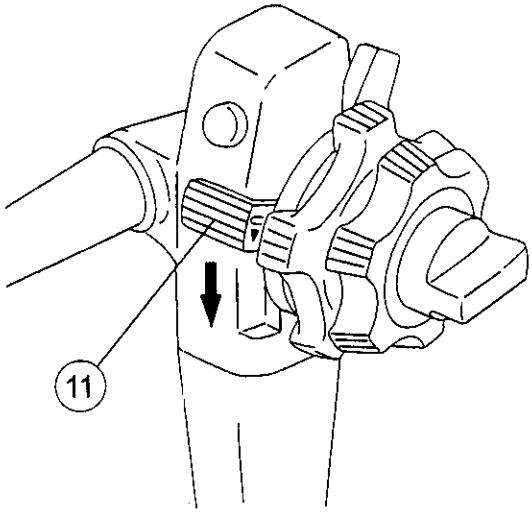

⑪ Forceps Elevator Lever

Used to control forceps elevator base.

<When forceps elevator lever is slanted toward the opposite side of the direction of U ►>

The forceps elevator base on the distal end of the Endoscope moves downward.
The endoscopic accessory in the field of view move toward the lower part of the monitor.

<When forceps elevator lever is slanted toward the direction of U ►>

The forceps elevator base on the distal end of the Endoscope moves upward.
The endoscopic accessory in the field of view move toward the upper part of the monitor.

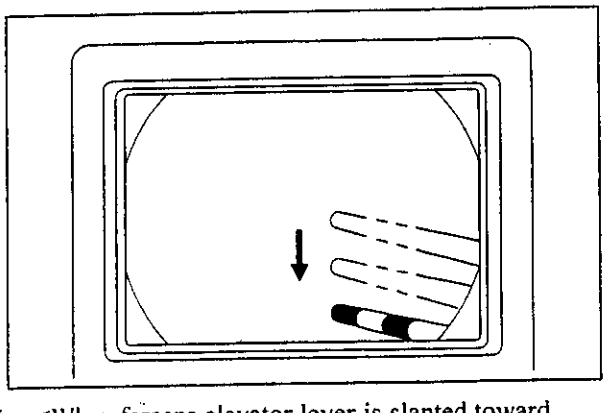

<When forceps elevator lever is slanted toward the opposite side of the direction of U ►>

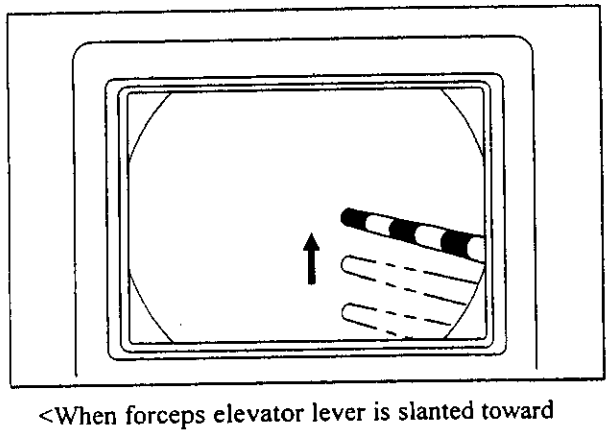

<When forceps elevator lever is slanted toward the direction of U ►>

Questions? Contact FDA/CDRH/OCE/DID at CDRH-FOISTATUS@fda.hhs.gov or 301-796-8118

Remote Operating Switches

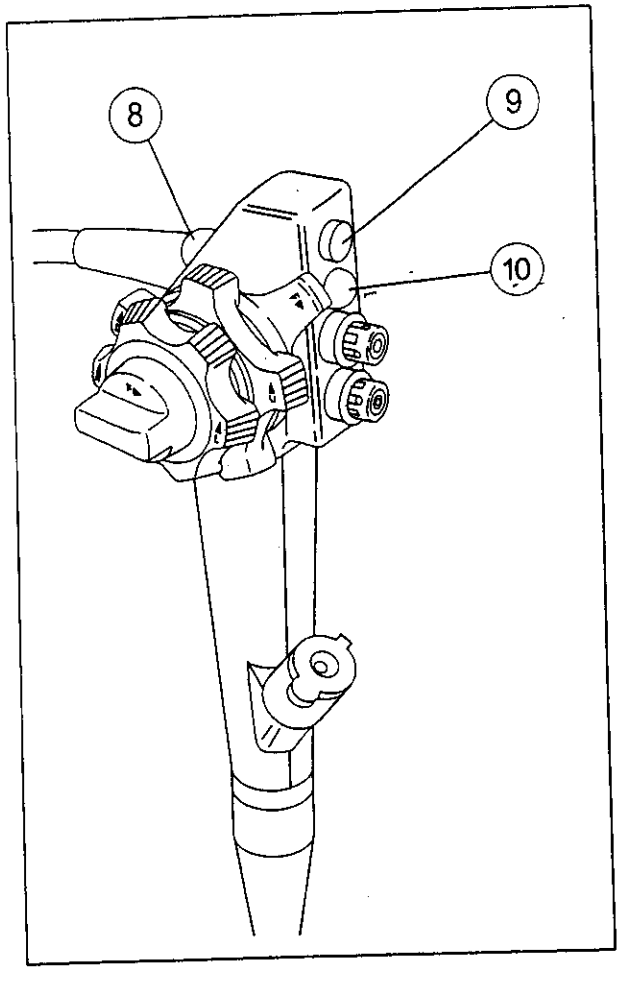

⑧ RC Switch

This is the switch that starts and stops VCR recording. Pushing it once starts the recording. Pushing it again stops the recording.

⑨ MM Switch

This switch electronically enlarges the image.
The image is enlarged to 1.5x when this switch is pushed. The field of view then narrows by the amount of enlargement. The image returns to the normal size when the switch is pushed again.

⑩ FR Switch

This is the remote switch for still image and the hard copy unit. The screen image is frozen while this button is being pushed. Image freezing is canceled a few seconds after it is released.
If the switch is pushed again while the image is still frozen, a photo signal is output to the device connected to the hard copy terminal.

Questions? Contact FDA/CDRH/OCE/DID at CDRH-FOISTATUS@fda.hhs.gov or 301-796-8118

Record processed under FOIA #2015-10057 7/7/16

Chapter 5 Preparation for Use of the EVE Endoscope

This chapter describes the system necessary for endoscopy.

5.1 Preparing Equipment 5-2
5.2 Connecting the Endoscope 5-3
5.3 Inspection of Endoscope 5-5
5.3.1 Inspecting Insertion Portion 5-5
5.3.2 Inspecting the Bending Mechanism 5-5
5.3.3 Inspecting the Forceps Elevator Mechanism 5-6
5.3.4 Inspecting the Air/Water Supply, Suction and Forceps Channel 5-6
5.3.5 Inspecting the Objective Lens 5-8
5.4 Inspection of Forceps 5-9

Questions? Contact FDA/CDRH/OCE/DID at CDRH-FOISTATUS@fda.hhs.gov or 301-796-8118

Record processed under FOIA #2015-10057 7/7/16

Chapter 5 Preparation for Use of the EVE Endoscope

⚠ CAUTION

The use of abnormal equipment will cause wrong diagnosis or injury. If the inspection result shows any abnormality, do not use the same equipment.

5.1 Preparing Equipment

(1) Move the cart with the processor to the place where the Endoscope is to be used.

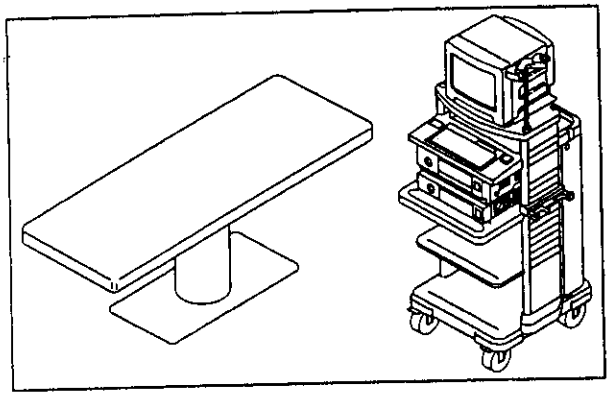

(2) After turning the main switch on the cart to the OFF position, plug the power cord from the cart into a protective earth receptacle.

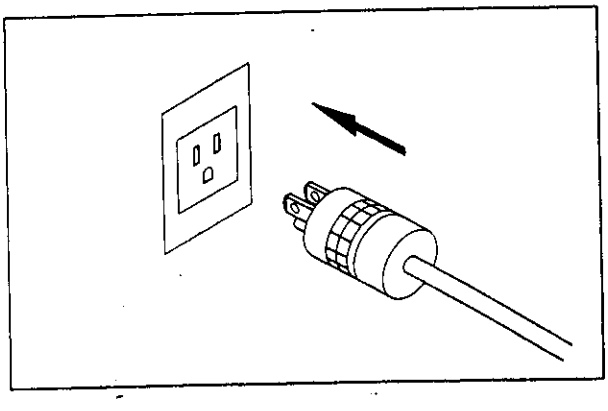

(3) Mount the suction bottle on the suction unit.

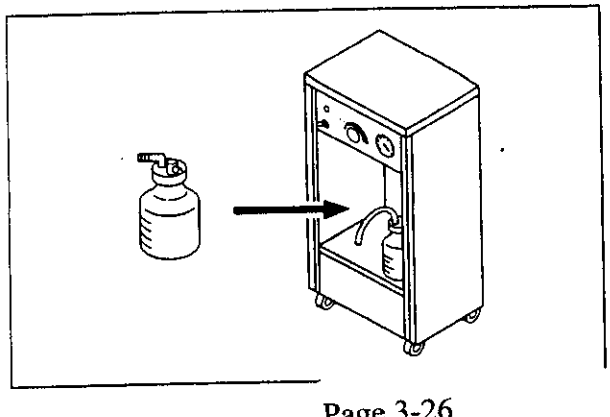

93

Questions? Contact FDA/CDRH/OCE/DID at CDRH-FOISTATUS@fda.hhs.gov or 301-796-8118

Record processed under FOIA #2015-10057 7/7/16

(4) Connect the suction unit and suction connector of the Endoscope to the suction tube.

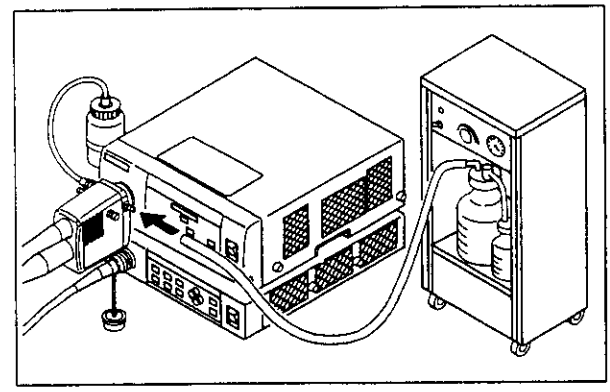

[Note]

When attaching the Endoscope and turning ON the power to the processor, press the scope switch on the processor when a "PLEASE PUSH SCOPE SW" message appears.

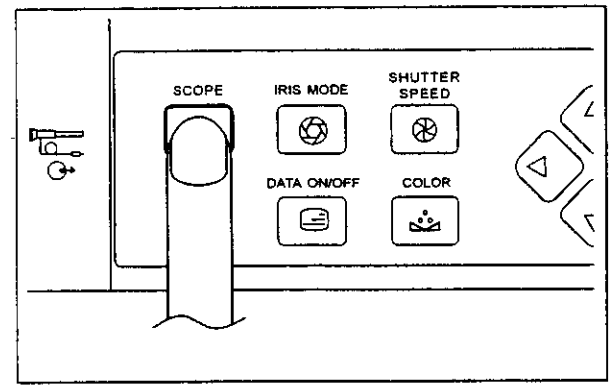

⚠ CAUTION

Endoscope may be adhered to mucous membrane, resulting in damage to the mucous membrane.
Set a suction pressure at 53kPa or less.

(5) Set the suction pressure to 40 to 53 kPa (300 to 400 mmHg).

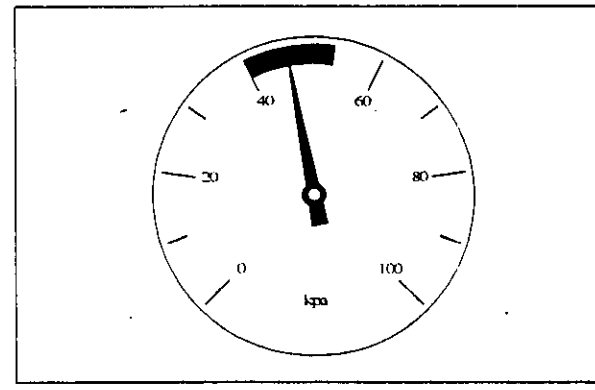

94

Questions? Contact FDA/CDRH/OCE/DID at CDRH-FOISTATUS@fda.hhs.gov or 301-796-8118

Record processed under FOIA #2015-10057 7/7/16

(4) Mount the water tank, 80% filled with water, on the processor.

[Note]
Change the water in the water tank every day.

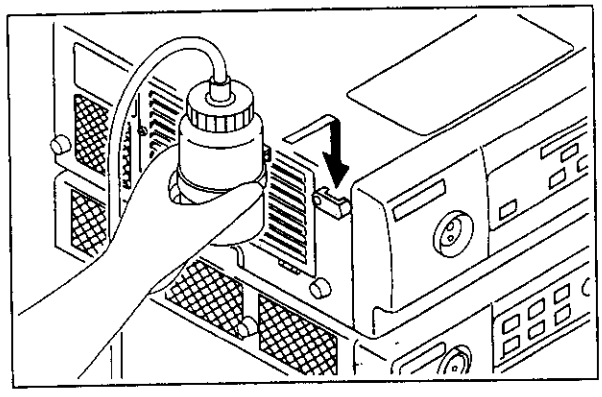

5.2 Connecting the Endoscope

⚠ CAUTION

Touching the LG connector with hands immediately after use of the Endoscope may cause to burn.
Do not touch the LG connector tip until it will be cooled down (5 minutes).

(1) Insert the LG connector of the Endoscope into the Endoscope socket on the light source.

(2) Insert the EVE connector of the Endoscope into the EVE connector socket on the processor.

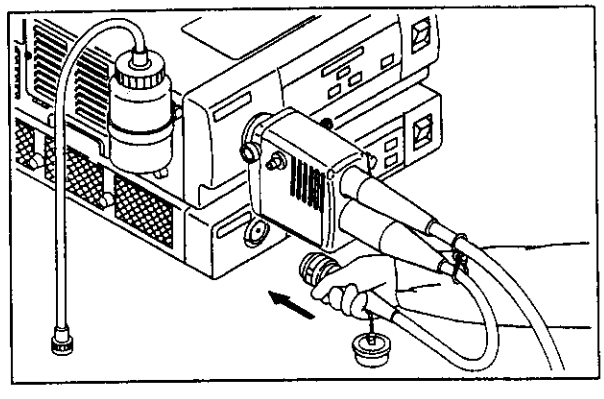

(3) Insert the connector of the water tank into the feed water connector on the Endoscope.

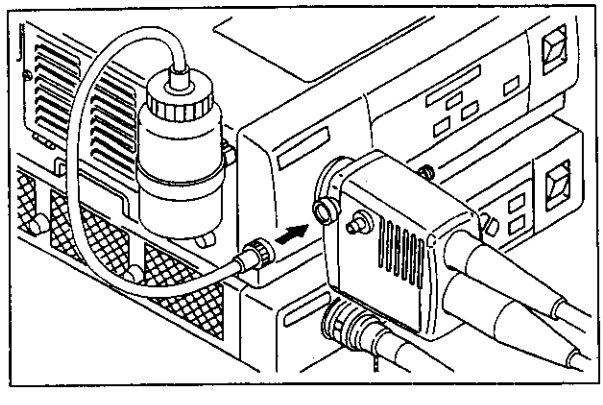

Questions? Contact FDA/CDRH/OCE/DID at CDRH-FOISTATUS@fda.hhs.gov or 301-796-8118

Record processed under FOIA #2015-10057 7/7/16

3 Inspection of Endoscope

5.3.1 Inspecting the Insertion Portion

Visually check the insertion portion (distal end, bending portion and flexible portion) for abnormalities such as flaws or dents and for sharp edges on protrusions that may injure the patient.

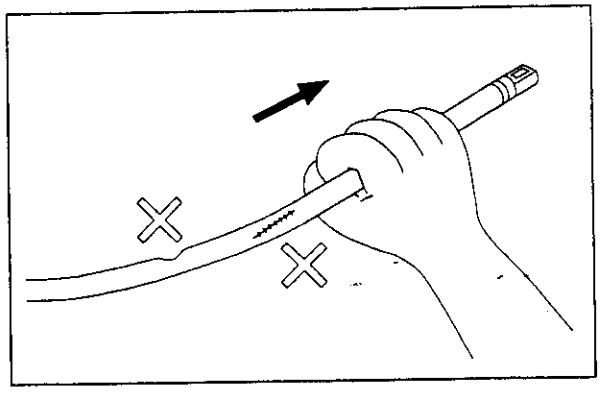

5.3.2 Inspecting the Bending Mechanism

(1) Unlock the up-down locking lever and left-right locking knob by turning them in the direction of F ►.

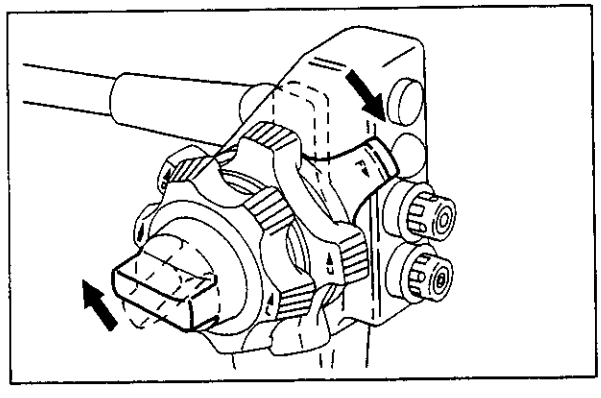

(2) Turn the up-down angle knob and left-right angle knob in the U, D, L and R directions until they stop.
Check that the bending portion turns smoothly.

Check that releasing the knobs unbends the bending portion a little.

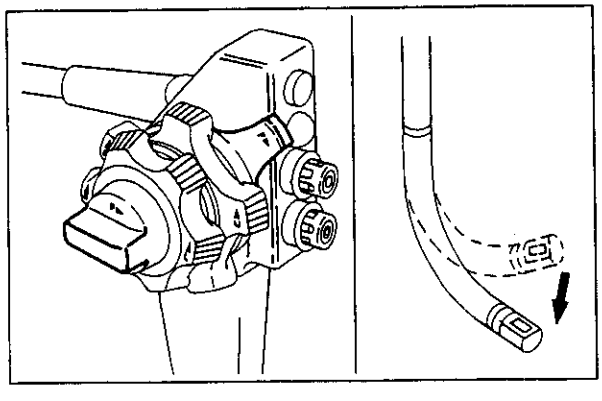

(3) Turn the up-down locking lever and left-right locking knob in the direction opposite to F ►, and then lock them.

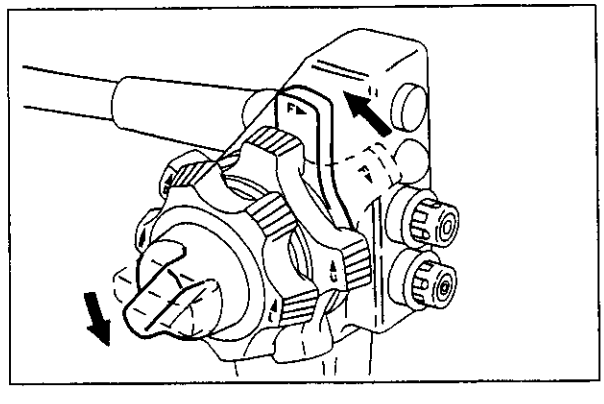

Questions? Contact FDA/CDRH/OCE/DID at CDRH-FOISTATUS@fda.hhs.gov or 301-796-8118

Record processed under FOIA #2015-10057 7/7/16

(4) Turn the angle knobs in similar manner as in step (2), and check how the bending portion bends. Here, the angle knobs should feel a little heavier than in step (2).
Check that bending portion retains its bent state after the angle knobs are released.

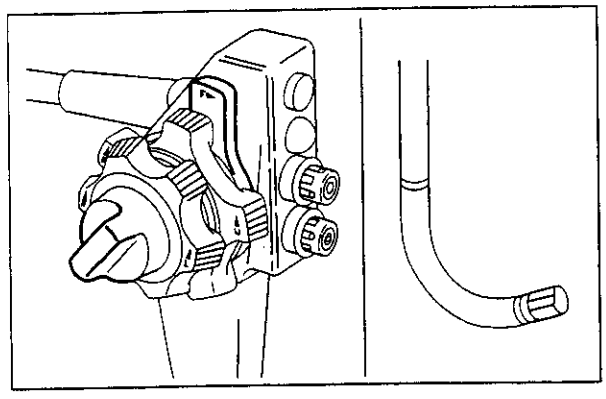

5.3.3 Inspecting the Forceps Elevator Mechanism

(1) Move forceps elevator lever.

(2) Check that the forceps elevator at the distal end of the Endoscope moves.

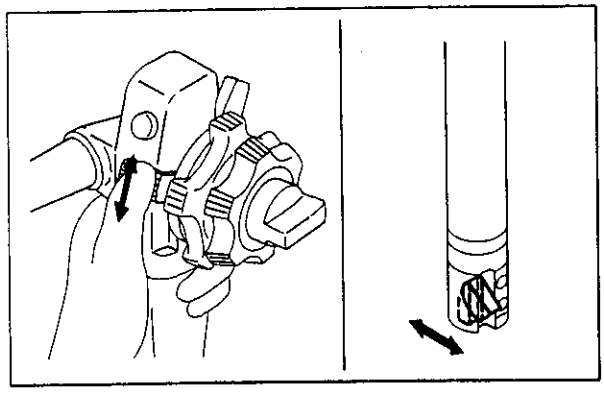

5.3.4 Inspecting the Air/Water Supply, Suction and Forceps Channel

(1) Switch on the power to the suction unit, cart and processor. Keep the lamp off.

(2) Have a glass of water ready.

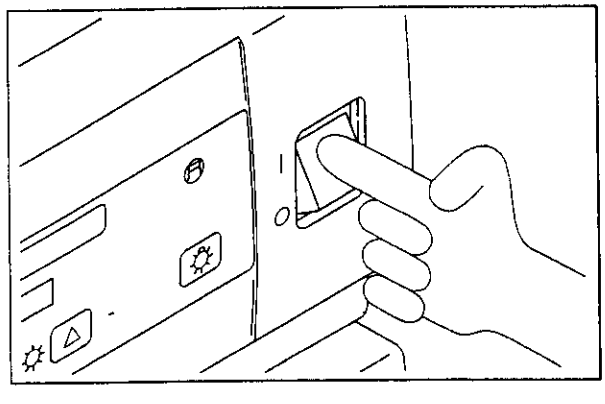

Questions? Contact FDA/CDRH/OCE/DID at CDRH-FOISTATUS@fda.hhs.gov or 301-796-8118

Record processed under FOIA #2015-10057 7/7/16

3.5 Inspecting the Objective Lens

⚠ CAUTION

Viewing the light of light guide directly may damage your eyes.
Switch off the light before inspecting the lens.

(1) Turn OFF the lamp.

Look at the distal end of the Endoscope at an angle and check that the objective lens is free of dirt or foreign matter.

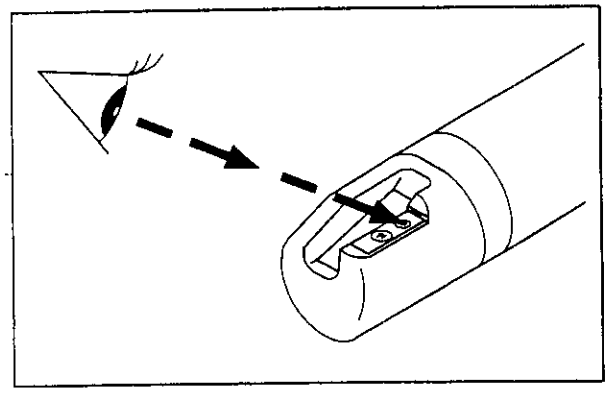

(2) If the lens is dirty, clean it.

[Note]
To clean the lens, wipe it with gauze (or something similarly soft) dampened with lens cleaner or ethanol.

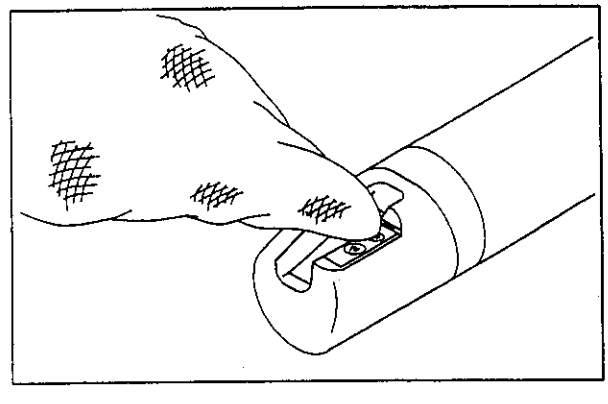

(3) Switch on the lamp and observe the endoscopic image on the monitor. Check that the image is free of cloudiness or blurs.

[Note]
If wiping does not remove cloudiness from the objective lens, it is likely that the Endoscope is not sufficiently airtight. Run an air tightness test with an air tightness tester LT-7.

➜ "8.5.3 Air Tightness Test" (p.8-10)

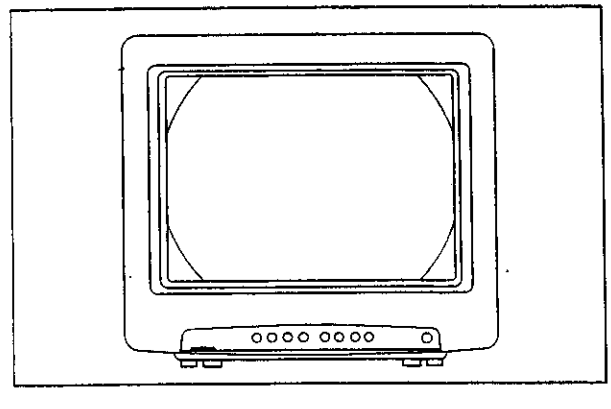

Questions? Contact FDA/CDRH/OCE/DID at CDRH-FOISTATUS@fda.hhs.gov or 301-796-8118

(3) Place the distal end of the Endoscope in air, depress the air/water button, and check that water comes out of the nozzle.

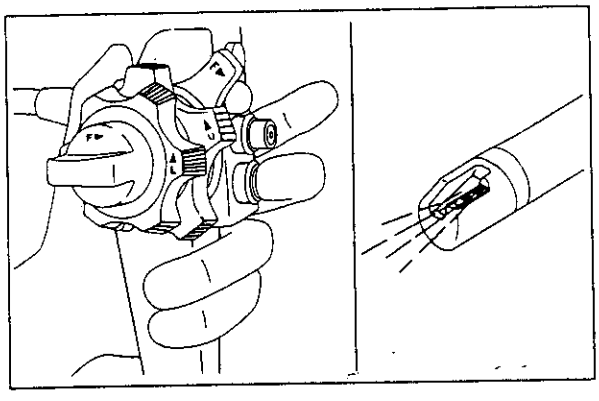

(4) Dip the distal end of the Endoscope in water, stop the center hole in air/water button with your finger, and check that air comes out of the nozzle.
Then take your finger off the hole and check that air does not come out of nozzle.

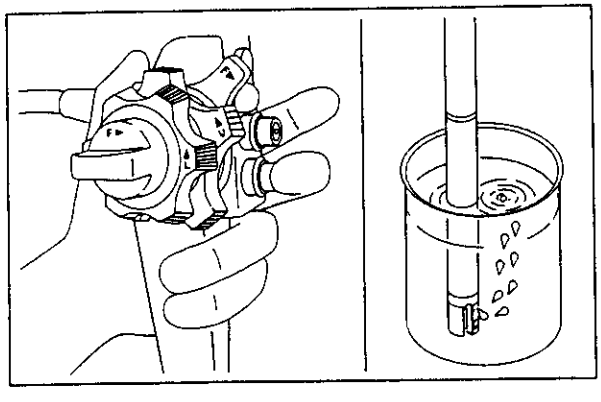

(5) Put a forceps valve in forceps inlet.
Dip the distal end of the Endoscope in water, and check that depressing the suction button sucks in water and that releasing it stops suction.

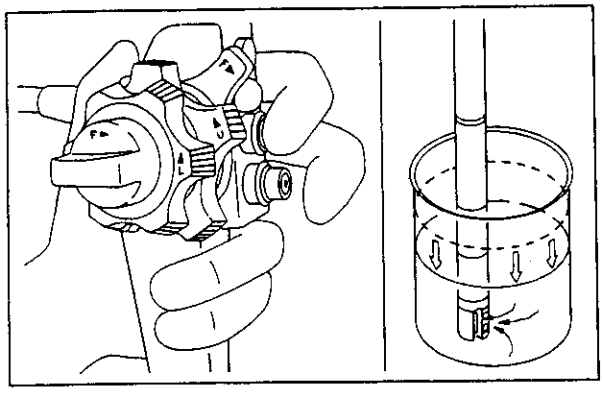

(6) Insert the forceps from the forceps inlet and check that their tips come smoothly out of the outlet in the distal end of the Endoscope.

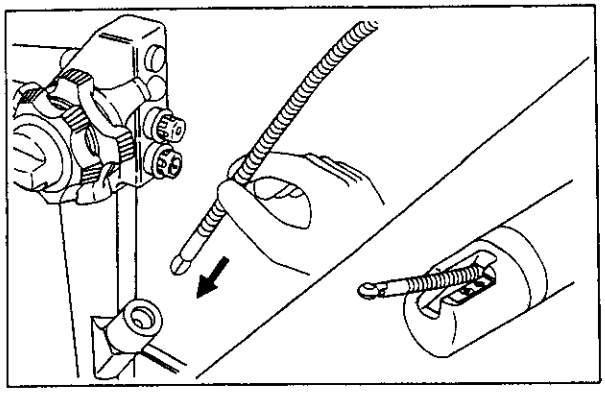

Questions? Contact FDA/CDRH/OCE/DID at CDRH-FOISTATUS@fda.hhs.gov or 301-796-8118

Inspection of Forceps

CAUTION

Bending forceps with a small curvature may break it.
Do not bend forceps with a curvature radius of 10 mm or less.

(1) Inspect the operation of the forceps.

Visually check the forceps for breakage or significant bends, and for sharp edges on protrusions that may injure the patient.

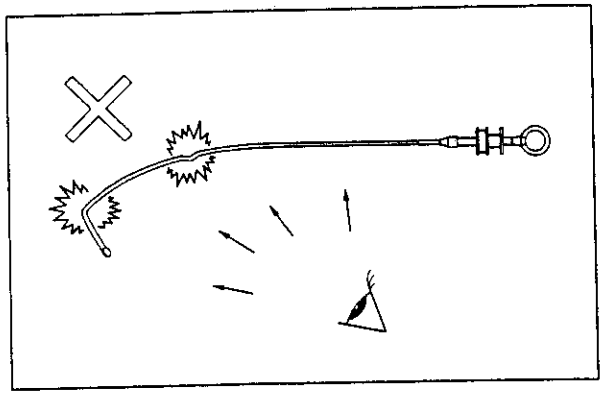

(2) Form the spring of the forceps into a double ring approximately 200 mm in diameter, as shown in the figure.

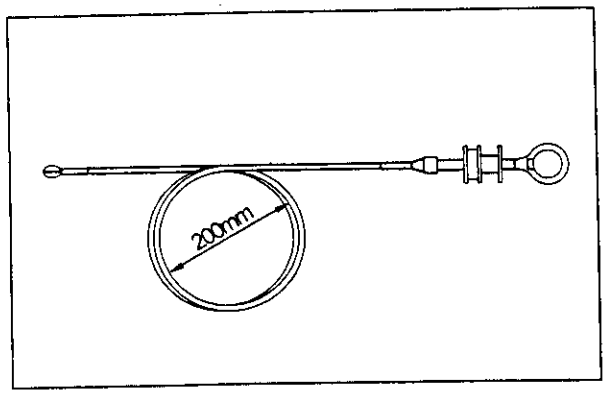

(3) Operate the handle of the forceps and check that their tips open and close.

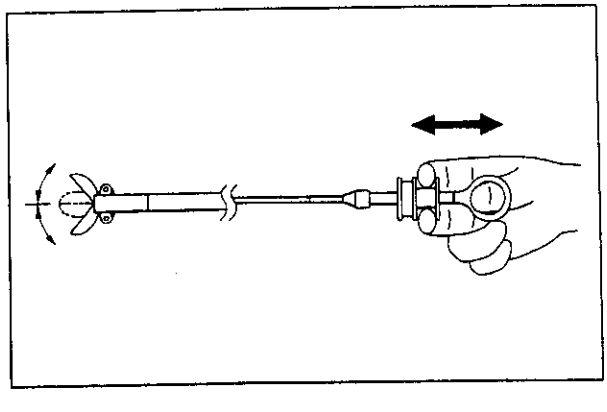

Questions? Contact FDA/CDRH/OCE/DID at CDRH-FOISTATUS@fda.hhs.gov or 301-796-8118

Record processed under FOIA #2015-10057 7/7/16

Chapter 6 Method of Use

This chapter outlines how to operate of the equipment, according to the general procedures. Regarding clinical procedures, use proper clinical judgment.

6.1 Preparation 6-2
6.1.1 Preparing the Necessary Equipment 6-2
6.1.2 Pretreatment of Patient 6-2
6.2 Insertion and Observation 6-3
6.3 Biopsy 6-6
6.4 ERCP 6-8
6.5 Pulling Out the Endoscope .....

Questions? Contact FDA/CDRH/OCE/DID at CDRH-FOISTATUS@fda.hhs.gov or 301-796-8118

Record processed under FOIA #2015-10057 7/7/16

Chapter 6 Method of Use

6.1 Preparation

6.1.1 Preparing the Necessary Equipment

(1) Prepare the accessories and forceps, etc. to be used.

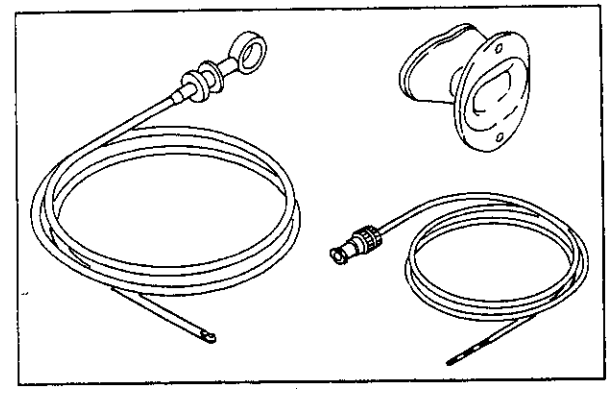

(2) Apply a liquid lens cleaner for Endoscopes to the surface of the lens at the distal end of the Endoscope.

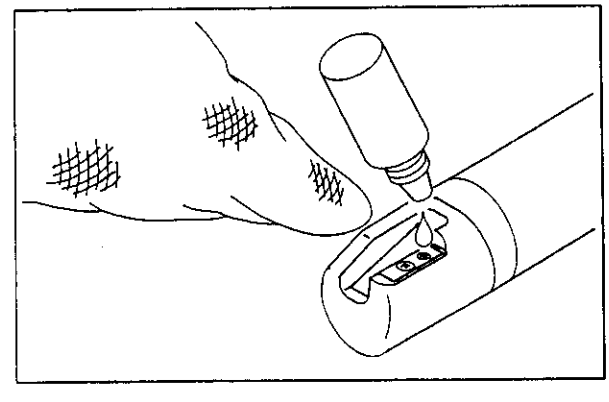

[Note]

Lens cleaner also has an anti-fogging effect.
A recommended product is SLC-1 from Sugiura Laboratory (furnished as standard).

6.1.2 Pretreatment of Patient

Use pretreatment that suits the purpose of examination.

Questions? Contact FDA/CDRH/OCE/DID at CDRH-FOISTATUS@fda.hhs.gov or 301-796-8118

Record processed under FOIA #2015-10057 7/7/16

6.2 Insertion and Observation

⚠ CAUTION

Energy of illumination may burn.
Do not allow the distal end to touch the same part for 5 minutes or more.

CAUTION

Direct application of Xylocaine spray will cause deterioration of the outer surface.
Do not directly apply Xylocaine spray to the insertion portion.
Do not use olive oil as a lubricant for insertion.

(1) Have the patient hold the mouthpiece in his/her mouth.

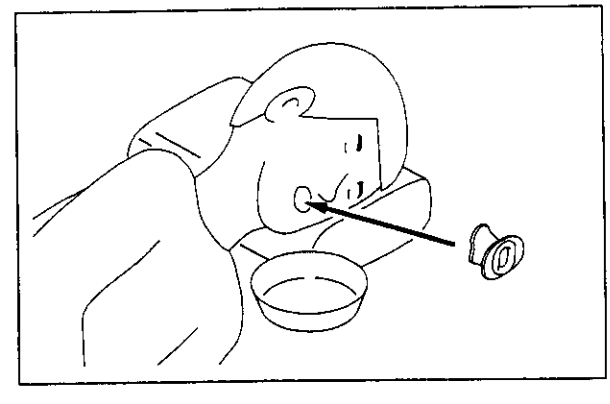

[Note]
If you choose to have the patient hold the mouthpiece after insertion, attach the mouthpiece to the insertion portion in advance. Have the patient hold it promptly after insertion.

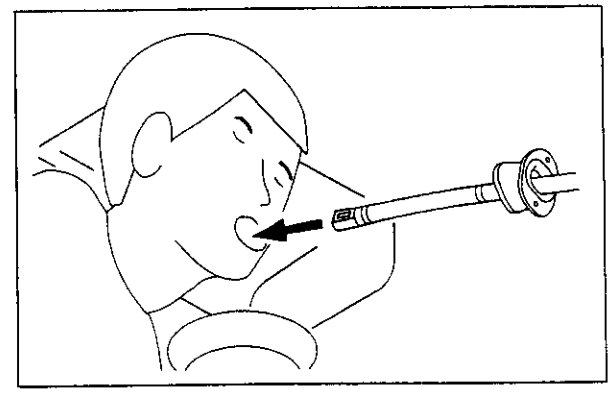

Questions? Contact FDA/CDRH/OCE/DID at CDRH-FOISTATUS@fda.hhs.gov or 301-796-8118

(2) Unlock the bending portion by turning the up-down locking lever and the left-right locking knob in the direction of F ► until they stop.

[Note]

Another procedure is also available: you can insert the Endoscope by locking the bending portion only in the left-right direction and unlocking it in the up-down direction.

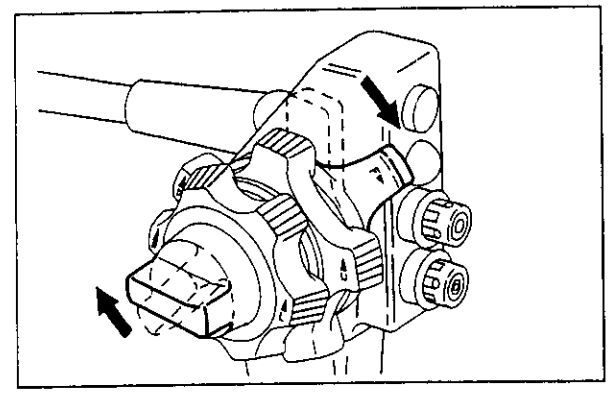

(3) Switch on the power to the processor and turn on the lamp.

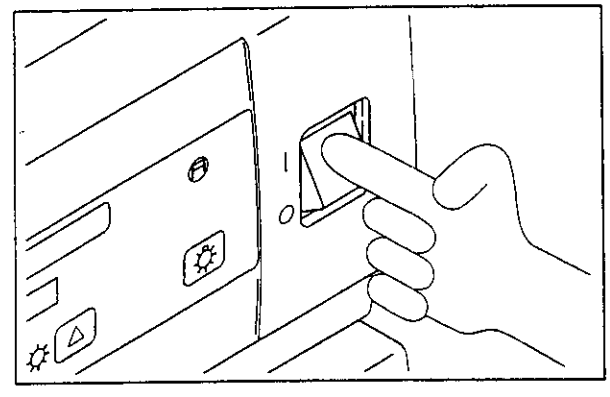

(4) Apply clean lubricant (Xylocaine jelly or the like) to the insertion portion as required.

[Note]

Do not apply Xylocaine spray, olive oil or the like directly to the insertion portion.

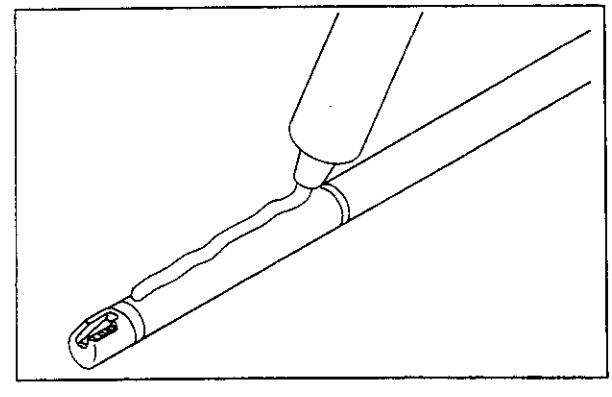

(5) Insert the distal end of the Endoscope from the oral cavity to the pharynx, while observing the process.

Control the brightness by the level button on the processor.

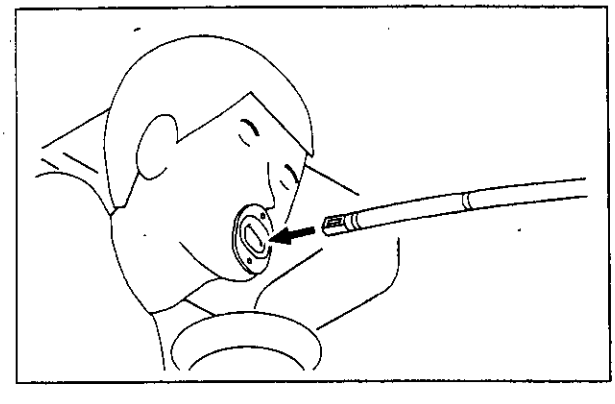

Questions? Contact FDA/CDRH/OCE/DID at CDRH-FOISTATUS@fda.hhs.gov or 301-796-8118

Record processed under FOIA #2015-10057 7/7/16

(6) Stop the center hole in the air/water button with a finger to supply air to the digestive tract.
The mucous membrane of the digestive tract will become clearly visible.

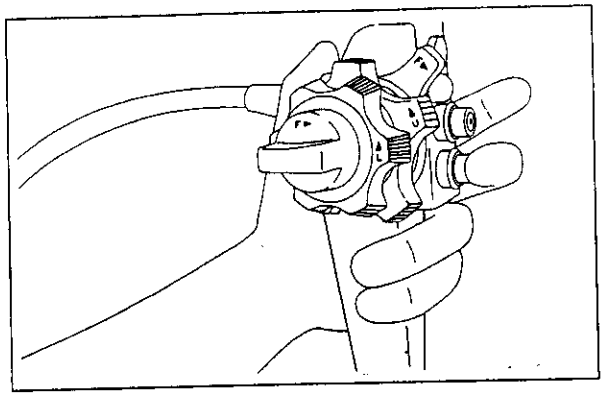

(7) Direct the distal end of the Endoscope to the region of interest by turning the up-down and left-right angle knobs.

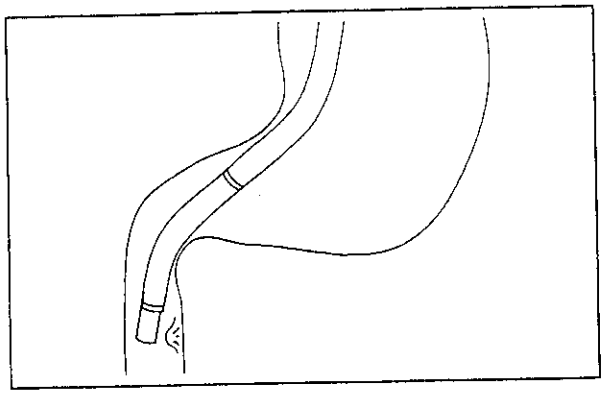

<To suction mucus>

To suction mucus, put the distal end of the Endoscope in the mucous lake and press the suction button.

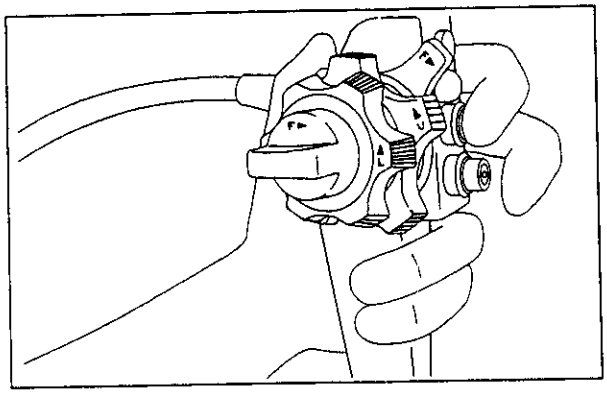

<If the surface of the lens is clouded with mucus
or if the image is obscured>

Wash the surface of the lens by pressing the water supply button. When washing is complete, remove the water from the surface of the lens by air blow and suction.

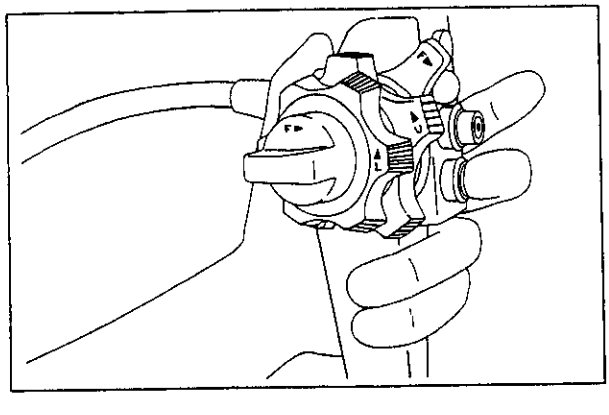

Questions? Contact FDA/CDRH/OCE/DID at CDRH-FOISTATUS@fda.hhs.gov or 301-796-8118

Record processed under FOIA #2015-10057 7/7/16

6.3 Biopsy

⚠ WARNING

Pressing forceps strongly against the digestive tract wall may cause holing or bleeding.
Do not press them the digestive tract wall with undue force.

CAUTION

Pushing forceps forcefully may damage Endoscope.
If you have difficulty inserting the forceps, do not push the forceps forcefully.

Inserting and pulling out the elevated forceps may cause malfunction.
Insert and pull out the forceps when it is not elevated.

[Note] Sometimes the forceps become stuck in the bending portion and will not pass smoothly. In such case, unbend the bending portion a little and try to insert again.

(1) Direct the distal end of the Endoscope to the biopsy site.

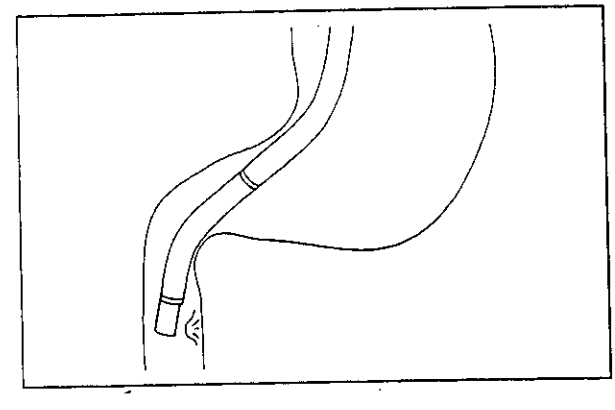

(2) Check the opening and closing of the forceps.

Insert the forceps from the forceps inlet by observing the image.

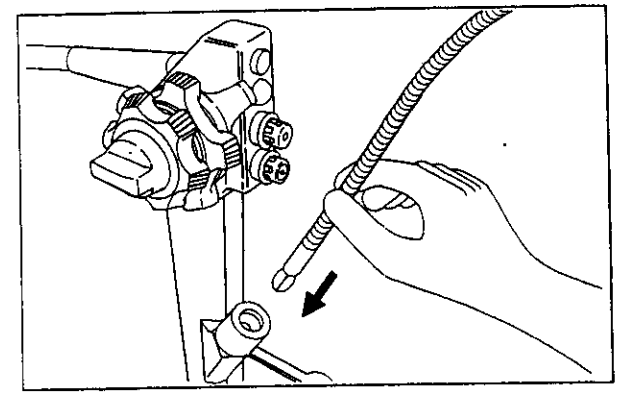

Questions? Contact FDA/CDRH/OCE/DID at CDRH-FOISTATUS@fda.hhs.gov or 301-796-8118

Record processed under FOIA #2015-10057 7/7/16

(3) When the distal end of the forceps come into the field of view, stop insertion temporarily.

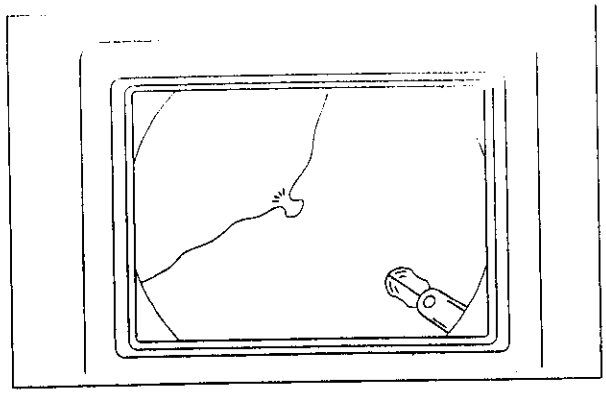

(4) Bring the forceps closer to the biopsy site slowly.

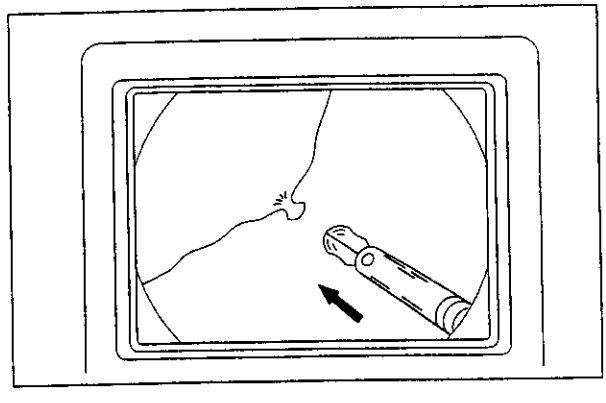

(5) Take a biopsy specimen by manipulating the angle knobs and letting the forceps in and out.

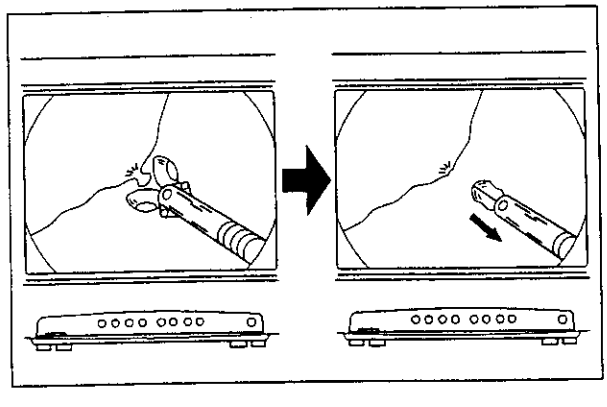

(6) Pull out the forceps slowly and take out the biopsy specimen.

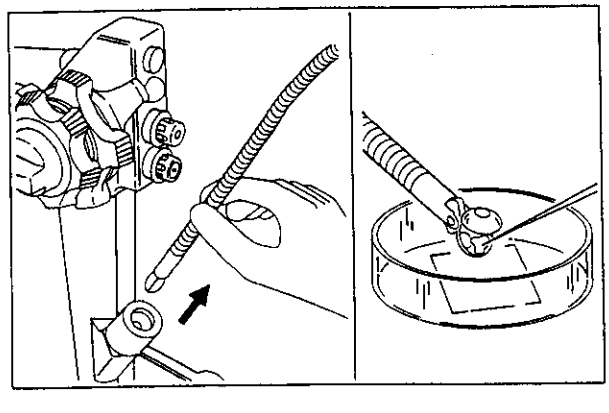

Questions? Contact FDA/CDRH/OCE/DID at CDRH-FOISTATUS@fda.hhs.gov or 301-796-8118

Record processed under FOIA #2015-10057 7/7/16

6.4 ERCP

⚠ WARNING

Pressing the cannulation tube strongly against the digestive tract wall may damage it.
Do not press it against digestive tract wall with undue force.

CAUTION

Sometimes, quick inserting of the cannulation tube may bend it.
Insert it little by little slowly.

(1) Manipulate to bend it so that the duodenal papilla aperture is placed at the center of the filed of view.

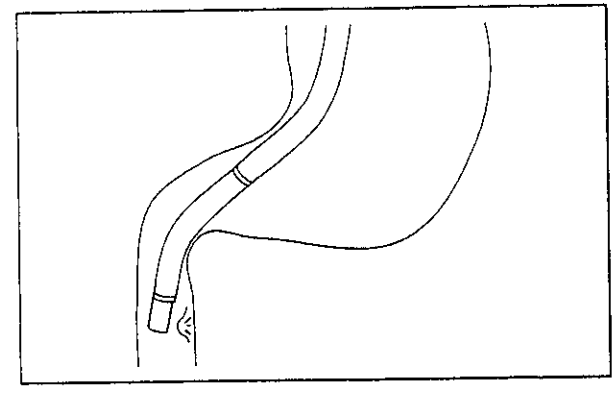

(2) Charge the contract media into a syringe and connect the cannulation tube to it. Check that the contract media comes out from the tip of the tube.

Keep the forceps elevator lever upright and insert the cannulation tube into the instrument channel inlet.

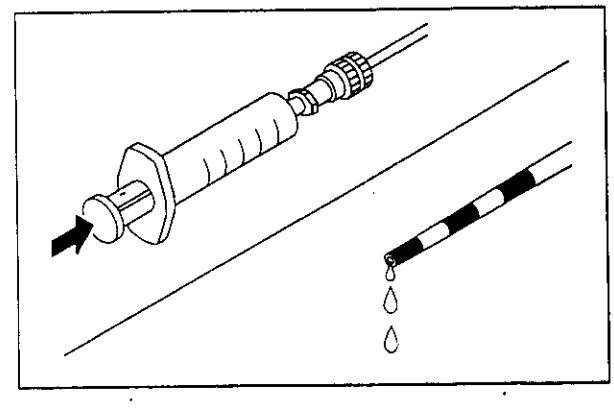

Questions? Contact FDA/CDRH/OCE/DID at CDRH-FOISTATUS@fda.hhs.gov or 301-796-8118

Record processed under FOIA #2015-10057 7/7/16

(3) When the cannulation tube touches against the forceps elevator and is unable to insert anymore, inset the cannulation tube by approximately 30mm by manipulating the forceps elevator lever to lay down the cannulation tube.

By manipulating the forceps elevator lever to erect the cannulation tube, the tip of the cannulation tube comes into the filed of view from the right lower of the screen.

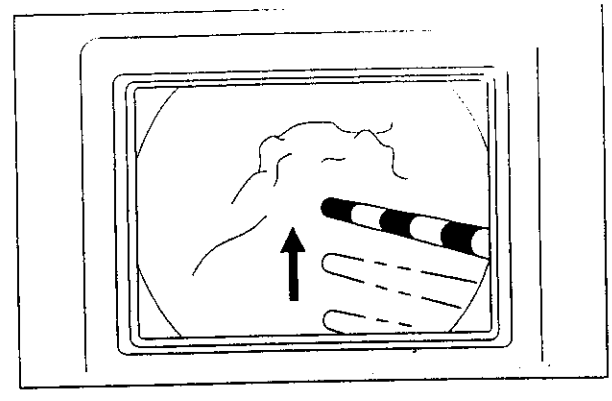

(4) Manipulate the angle knob, the forceps elevator lever and the moving in/out of the cannulation tube so that the tip of the cannulation tube directs to the papilla aperture, insert the cannulation tube into the common bile duct or the pancreatic duct through the papilla aperture.

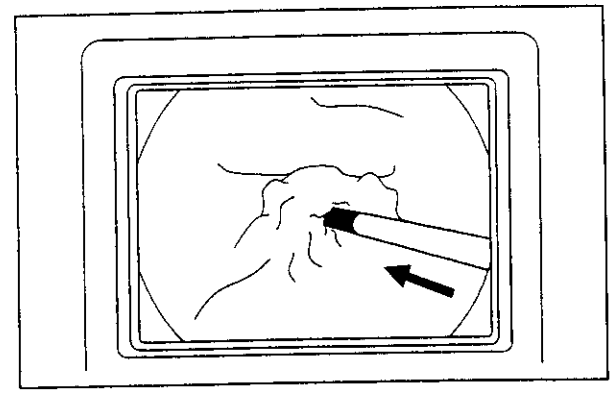

(5) Inject the contrast media in a syringe a little and check that the cannulation tube is inserted in the aimed common bile duct or pancreatic duct. Then, slowly inject the contract media into the common bile duct or the pancreatic duct.

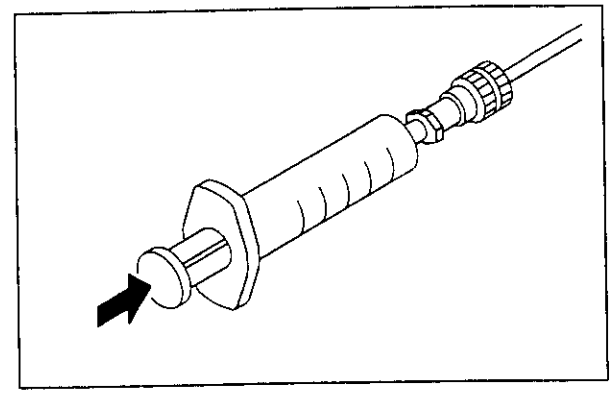

(6) Observe the conditions of the common bile duct or the pancreatic duct under X-rays illumination.

Questions? Contact FDA/CDRH/OCE/DID at CDRH-FOISTATUS@fda.hhs.gov or 301-796-8118

Record processed under FOIA #2015-10057 7/7/16

6.5 Pulling Out the Endoscope

(1) When the examination is over, draw any excessive air out of the body cavity.

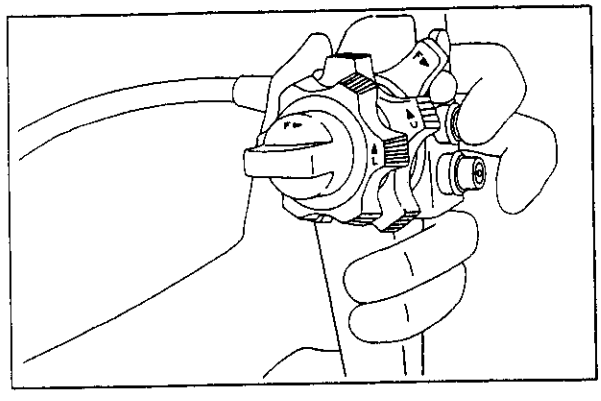

(2) Make the up-down locking lever and the left-right locking knob free.

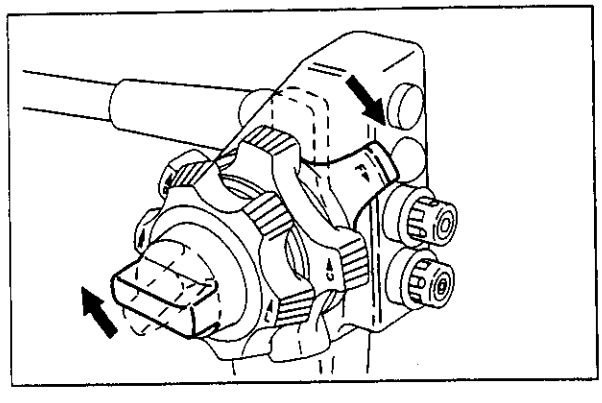

(3) Unbend the bending portion until it is almost straight by operating the angle knobs.

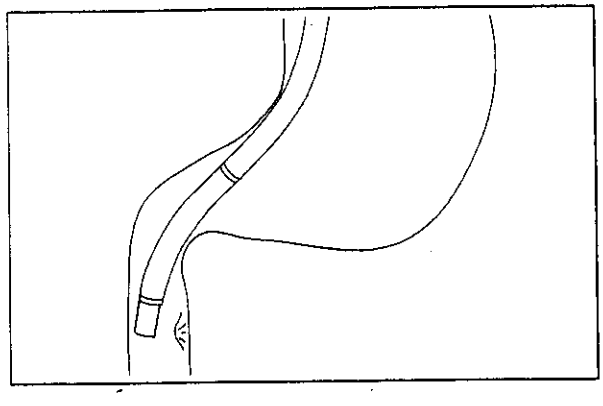

(4) Pull the Endoscope out slowly.

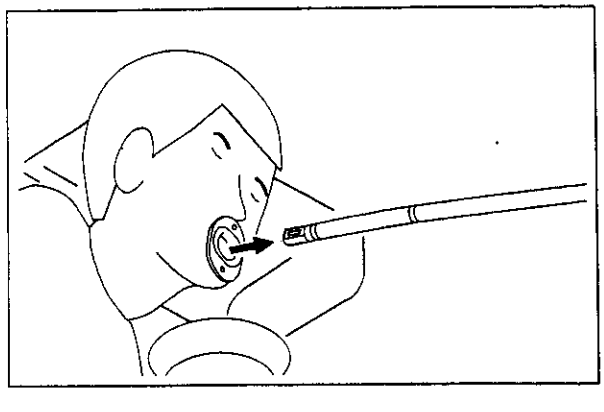

Questions? Contact FDA/CDRH/OCE/DID at CDRH-FOISTATUS@fda.hhs.gov or 301-796-8118

Record processed under FOIA #2015-10057 7/7/16

Chapter 7 Image Recording

This chapter explains image recording with taking photographs, a VCR or video printer.

7.1 Taking Photographs 7-2
7.2 Printing Using the Video Printer 7-3
7.2.1 The Video Printer 7-3
7.2.2 Input of the Screen Image 7-4
7.2.3 Input of Screen Image 7-4
7.2.4 Printout 7-5
7.3 Recording Using a Video Cassette Recorder 7-6

Questions? Contact FDA/CDRH/OCE/DID at CDRH-FOISTATUS@fda.hhs.gov or 301-796-8118

Record processed under FOIA #2015-10057 7/7/16

Chapter 7 Image Recording

7.1 Taking Photographs

(1) Turn the angle knobs until the part to be photographed enters the field of view.

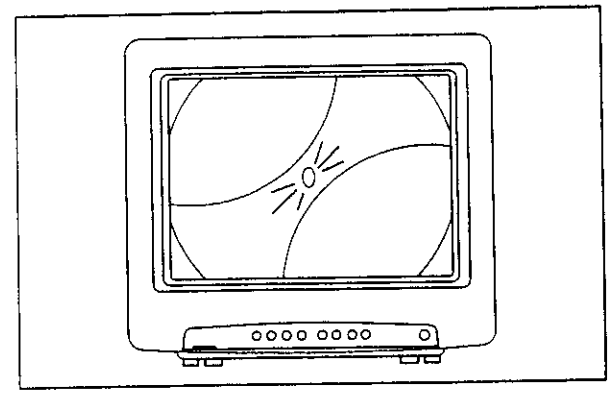

(2) When the part to be photographed enters the field of view, press the FR switch and freeze the image.

The still image will be maintained as long as the FR switch is being pressed.

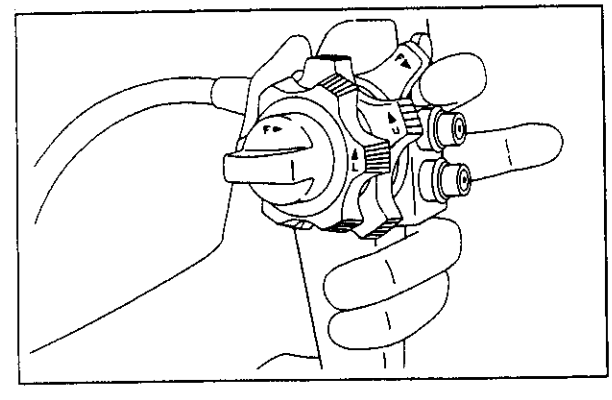

(3) Quickly judge if the still image is suitable for photographing.

If it is suitable for photographing, take the picture by pressing the FR switch once more while the image is still frozen.

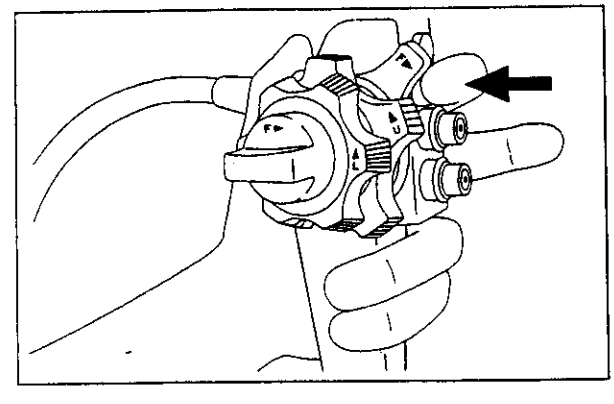

(4) If the image is not suitable for photographing, let go of the FR switch. Wait until the image freezing ends, and then start the procedure over again from step (1).

[Note]

For the details on preparations for photography and the settings for the hard copy unit, refer to the Operation Manual for the hard copy unit.

Questions? Contact FDA/CDRH/OCE/DID at CDRH-FOISTATUS@fda.hhs.gov or 301-796-8118

Record processed under FOIA #2015-10057 7/7/16

7.2 Printing Using the Video Printer

7.2.1 The Video Printer

The image observed on the monitor can be printed out on paper by connecting the video printer.

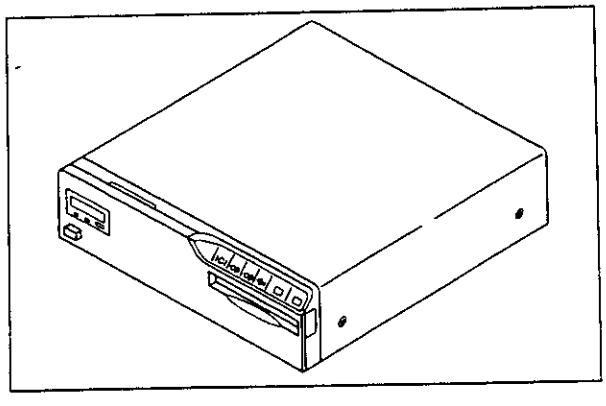

The UP-5600MDP(or UP-5600MD(UC2)) Video Printer prints the monitor image onto A5 size paper. Multiple screen images (1, 2 or 4 screens) can be printed on a single sheet of printout paper.

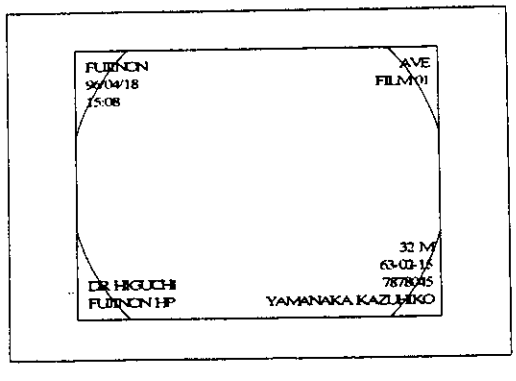

Full screen

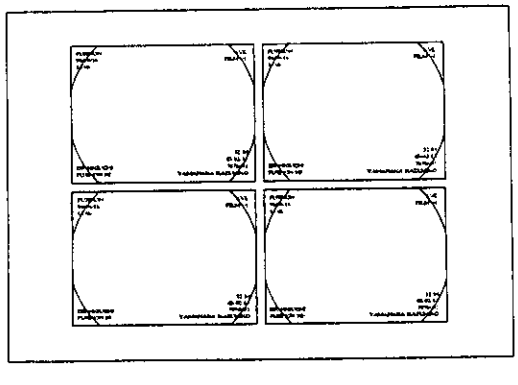

4 partitions

113

Questions? Contact FDA/CDRH/OCE/DID at CDRH-FOISTATUS@fda.hhs.gov or 301-796-8118

Record processed under FOIA #2015-10057 7/7/16

7.2.2 Input of the Screen Image

The method of inputting the screen image to the video printer depends on the specifications of the system you are using. The image is selected using the FR switch, the RC switch, the foot switch, or the remote controller for the printer.

In order to input into the printer using the RC switch, it is necessary to change the internal configuration of the control parts. Please contact our service personnel if you wish to input images using the RC switch.

The following explains the method for input of screen images using the FR switch or the RC switch on the Endoscope. Refer to the Operations Manual for the VP-402 for an explanation of the control method and the capture mode and for the details of settings and connections.

7.2.3 Input of Screen Image

<Input using the FR switch on the Endoscope>

(1) Move the area you want to record into the field of view and freeze the screen image by pressing the FR switch.
The still image will be maintained while the FR switch is being pushed.

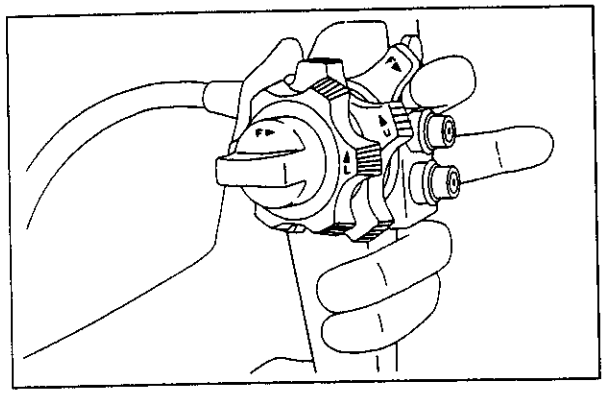

(2) The image will be input into the printer if you press the FR switch again while the image is still frozen.

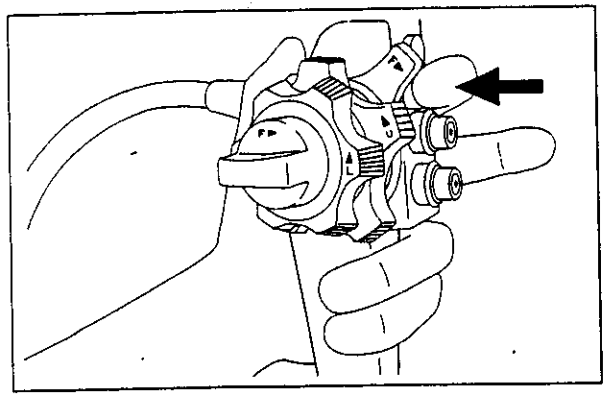

Questions? Contact FDA/CDRH/OCE/DID at CDRH-FOISTATUS@fda.hhs.gov or 301-796-8118

Record processed under FOIA #2015-10057 7/7/16

<Input using the RC switch>

(1) Move the area you want to record into the field of view and freeze the screen using the FR switch.
The still image will be maintained while the FR switch is being pushed.

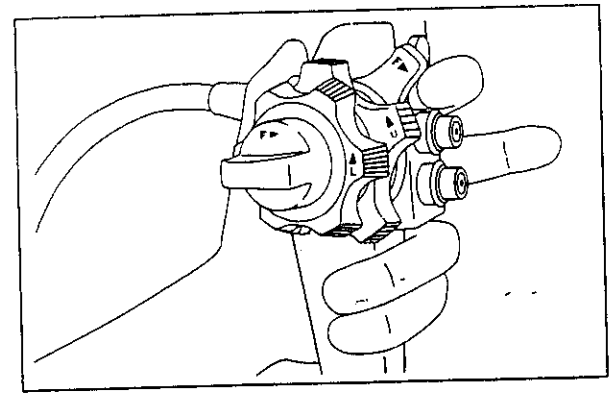

(2) The image will be input into the printer if you push the RC switch while the screen image is still frozen.

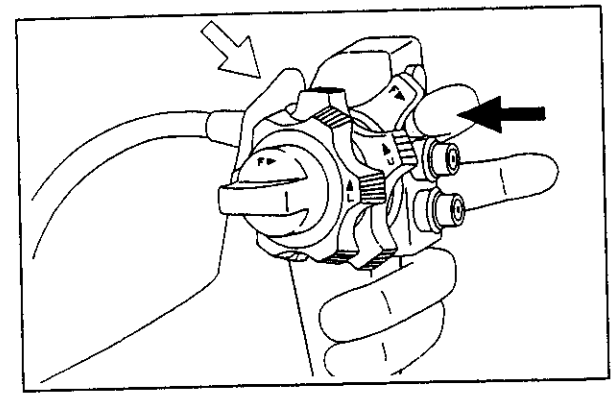

7.2.4 Printout

In the CP mode, printout occurs automatically when four screen images have been input. To print in the CC mode or CS mode, press the PRINT button on the main unit or the remote control (RM-5500).

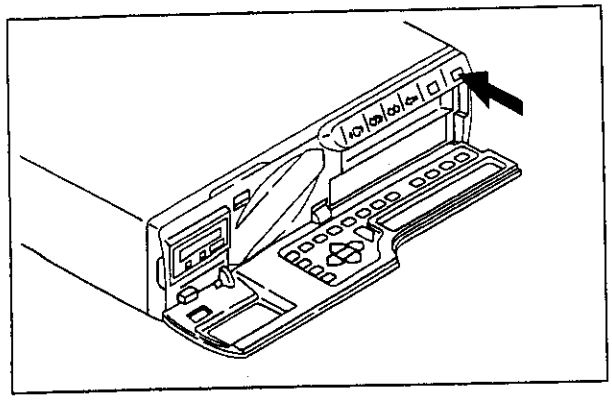

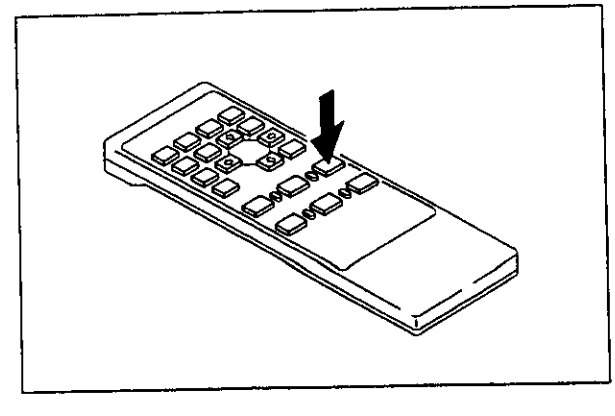

115

Questions? Contact FDA/CDRH/OCE/DID at CDRH-FOISTATUS@fda.hhs.gov or 301-796-8118

Record processed under FOIA #2015-10057 7/7/16

7.3 Recording Using a Video Cassette Recorder

The moving Endoscope screen image can be recorded if the SVO-9500MDP (SONY) video cassette recorder is connected to the processor.

Refer to the Installation Manual for EVE 400 system and the Operations Manual for the processor for the method of connecting the VCR to the processor and for the image recording method.

Questions? Contact FDA/CDRH/OCE/DID at CDRH-FOISTATUS@fda.hhs.gov or 301-796-8118

Record processed under FOIA #2015-10057 7/7/16

Appendix

Main Specifications Appendix-2
Warranty and After-Sales Service Appendix-5
Index Appendix-6

Questions? Contact FDA/CDRH/OCE/DID at CDRH-FOISTATUS@fda.hhs.gov or 301-796-8118

Record processed under FOIA #2015-10057 7/7/16

Main Specifications

<Classification of Medical Electrical Equipment>

1. Type of protection against electric shock : Class I equipment (power supply: protective earth plug)
2. Degree of protection against electric shock : Type BF applied part
3. Degree of explosion protection : Use prohibited in flammable gas atmosphere

[Note] Use in combination with VP-402 and XL-402

<Data about Main Unit>

Model	ED-450XT5
Optical system:	
Viewing direction	Side viewing (retro-viewing 15°)
Field of view	100°
Observation range (mm)	3－60
Method of illumination	Light guide method
Image size	Supper image
Distal end diameter (mm)	ϕ13.5
Flexible portion diameter (mm)	ϕ12.6
Forceps channel diameter (mm)	ϕ4.2*
Bending capability: Up/down	130° / 90°
Left/right	90° / 110°
Working length (mm)	1250
Total length (mm)	1550

* The compatibility of equipment chosen solely according to this forceps channel diameter is not guaranteed.

<Operating Environment and Storage Environment>

Temperature	10 - 40°C
Relative humidity	30 - 85%*
Atmospheric pressure	70 - 106 kPa

* Except when there is condensation

Questions? Contact FDA/CDRH/OCE/DID at CDRH-FOISTATUS@fda.hhs.gov or 301-796-8118

Record processed under FOIA #2015-10057 7/7/16

<Applicable Treatment Equipment>

Model	ED-450XT5
Biopsy forceps:	
Fenestrated	BF2418SF
Fenestrated with needle	BF2418FN
Basket retriever:	
Standard	K2418B
	K2418BW
Cannulation tube:	
Standard	T1720Z
	T1720ZS
Semi-tapered	T1720ZT
Tapered	T1720ZC
Indwelling	T1732Z
	T2132Z
Papillotomy knife	N2020C
	N2020C20
	N2020C40
	N2020CT
Diathermic snare:	
Half-moon	E2224M
Hexagon	E2224H
Cytology brush standard	H3518S
Cleaning brush	WB4321FW2
Washing tube	T1720W

Questions? Contact FDA/CDRH/OCE/DID at CDRH-FOISTATUS@fda.hhs.gov or 301-796-8118

Record processed under FOIA #2015-10057 7/7/16

<Image Size>

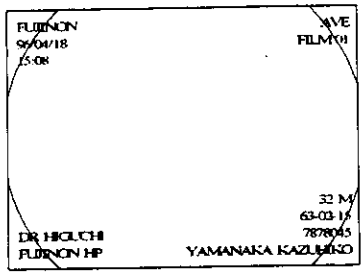

ED-450XT5

<Medical Device Directive>

This product complies with the requirements of
European Directive 93/42/EEC.
Classification : Class IIa

CE 0123

Questions? Contact FDA/CDRH/OCE/DID at CDRH-FOISTATUS@fda.hhs.gov or 301-796-8118

Record processed under FOIA #2015-10057 7/7/16

Warranty and After-Sales Service

<Certificate of Conformance>

This product is supplied with a certificate of conformance

<After-Sales Service>

1) If the equipment does not work properly, check it first reading this manual.

2) If the equipment is still not working well, ask for professional help.

   Consult your local dealer or FUJINON representative.

3) Repairs during the warranty period
   We will repair your equipment free of charge according to the provisions of the warranty.
   The warranty period is one year after date of purchase. (Six months for forceps.)
   Note that the warranty is void in the following cases:

   a. Damage caused by fire or natural disaster such as storms or floods.
   b. Troubles caused by careless handling or misuse of the product on the part of the user.
   c. Troubles caused by repair or modification by an unauthorized person.

4) Repairs after the warranty period

   We will make a paid repair at your request if the equipment is found possible to restore the normal function by repair. When contacting our service representative, provide the following information.

   Model name :
   Serial number :
   Description of failure : as detailed as possible
   Date of purchase :

Questions? Contact FDA/CDRH/OCE/DID at CDRH-FOISTATUS@fda.hhs.gov or 301-796-8118

Record processed under FOIA #2015-10057 7/7/16

Index

<Numricals>

135 Camera 2-5

<A>

Aeration 10-5
Air/water button 4-4

<B>

Bending mechanism 4-2
Bending portion 3-3

<C>

Cart 2-3, 2-4
Caution 2, 6, 1-2
Chemical disinfection 9-2
Clinical procedures 3
Control portion 3-2

<D>

Detergente enzimatico liquido 8-3
Distal end 3-3
DK-402E 2-3, 2-4

<E>

Electrosurgical instruments 12-2
EOG 10-3, 10-4
ERCP 2-3, 6-8
Ethylene oxide gas 10-3, 10-4
EVE connector 3-3

<F>

Feed water connector 3-3
FH-15W 2-3, 2-5
Flexible portion 3-3
Forceps elevator 4-6, 5-6
Forceps inlet 4-4
Forceps valve 2-2
Freeze 4-5
FR switch 4-5

<G>

Gas sterilization 10-2

<H>

Hard copy 2-5

<I>

Image recording 7-2
Insertion portion 3-3

<L>

Left-right angle knob 4-3
Left-right locking knob 4-3
LG connector 3-3
LG flexible portion 3-2
Lock 4-2, 4-3

<M>

Maintenance 1-2
Monitor 2-3, 2-5
Mouthpiece 2-2, 6-3

<N>

Neatral detergent 8-3

<O>

Operating environment Appendix-2

<P>

PGM-100P1MD 2-3, 2-5
Preparations 5-2
Protective earth receptacle 5-2
PVM-1453MD/1353MD 2-3, 2-5

<S>

Safety 1-2
S terminal 3-3
Storage 11-2
Storage environment Appendix-2
Suction button 4-4
Suction connector 3-3
SVO-9500MD/MDP 2-5

Questions? Contact FDA/CDRH/OCE/DID at CDRH-FOISTATUS@fda.hhs.gov or 301-796-8118

Record processed under FOIA #2015-10057 7/7/16

<U>

Unlock 4-2, 4-3
UP-5600MDP/MD 2-5
Up-down angle knob 4-2
Up-down locking lever 4-2

<V>

Ventilation adaptor 3-3, 10-5
Ventilation connector 3-3
VP-402 ..... 2-3, 2-4

<W>

Warning 2, 6, 1-2
Washing 8-2
Water tank 5-3

<X>

XL-402 ..... 2-3, 2-4

Questions? Contact FDA/CDRH/OCE/DID at CDRH-FOISTATUS@fda.hhs.gov or 301-796-8118

Record processed under FOIA #2015-10057 7/7/16

FUJINON

manufacturer
FUJI PHOTO OPTICAL CO.,LTD.
1-324 UETAKE-CHO, SAITAMA-SHI, SAITAMA 330-8624 JAPAN
TEL : 048-668-2153 FAX : 048-668-1570

represented in the North America by
FUJINON INC.
10 HIGH POINT DRIVE, WAYNE, NJ 07470 U.S.A.
TEL : 973-633-5600 FAX : 973-633-8818

represented in the EU, Middle East and Africa by
FUJINON (EUROPE) GmbH
HALSKESTRASSE 4,47877 WILLICH GERMANY
TEL : 02154-924-0 FAX : 02154-924-290

represented in the South East Asia by
FUJI KOKI SINGAPORE PTE. LTD.
211 HENDERSON ROAD, #10-04 HENDERSON
INDUSTRIAL PARK, SINGAPORE, 159552
TEL : 276-4988 FAX : 276-6911

represented in the Oceania by
F.P. FOCUSING PTY. LTD.
UNIT 18, 52 HOLKER STREET, SILVERWATER
N.S.W. 2128 AUSTRALIA
TEL : 02-9748-2744 FAX : 02-9748-2428

Questions? Contact FDA/CDRH/OCE/DID at CDRH-FOISTATUS@fda.hhs.gov or 301-796-8118

Record processed under FOIA #2015-10057 7/7/16

FUJINON

Duodeno Electronic Video Endoscopes

ED-250XL5
ED-250XT5

DRAFT

OPERATION MANUAL

(Preparation and Operation)

Thank you for purchasing our product. Read this manual carefully before use to avoid unexpected accidents, and take full advantage of the product's capabilities.

Questions? Contact FDA/CDRH/OCE/DID at CDRH-FOISTATUS@fda.hhs.gov or 301-796-8118

Record processed under FOIA #2015-10057 7/7/16

Important Safety Information

1. Intended Use

This product is a medical Endoscope (side viewing) for the duodenum and upper G.I. tract. It is intended for observation, diagnosis, and endoscopic treatment of the esophagus, stomach, and duodenum. Never use this product for any other purposes.

2. Safety

Read and understand this manual carefully before use. Use the Endoscope by following the provided instructions. Items important for the safe use of the Endoscope are summarized in Chapter 1 "Safety."
Safety precautions associated with individual operations or procedures are provided separately, indicated by "⚠ WARNING" or "⚠ CAUTION."

3. Warning

Items that must be observed for safety when performing endoscopy or electrosurgery are identified by "⚠ WARNING" or "⚠ CAUTION." Perform procedures correctly by reading and understanding the warning information carefully.

⚠ WARNING

Improper use or operation of the equipment may injure patients, physicians, or people in the vicinity.

Read and understand this manual carefully before operating the equipment.

Improper operations that will damage the equipment only are identified by "CAUTION."

Questions? Contact FDA/CDRH/OCE/DID at CDRH-FOISTATUS@fda.hhs.gov or 301-796-8118

Record processed under FOIA #2015-10057 7/7/16

4. About Clinical Procedures

This manual assumes that the product will be used by medical specialists who have received proper training in endoscopic procedures. It does not provide information about clinical procedures. Regarding clinical procedures, use proper clinical judgment.

5. When Using the Endoscope for the First Time

This product has not been sterilized. When using it for the first time, use the level of disinfection or sterilization suitable to the application, in accordance with Chapter 8 "Washing," Chapter 9 "Chemical Disinfection," and Chapter 10 "Gas Sterilization."

6. Treatment with Electrosurgical Instruments

Before electrosurgery, basic in vitro experiments must be performed to learn how to tighten the snare properly, the feeling of the Papillotomy knife being pulled and how repeated use affects the cutting quality of instruments.

7. Operation of Endoscope

Endoscope is a precision instrument. Unnatural force or impact on its insertion portion, flexible portion, or distal end may not only damage the instrument but also injure the inside of the patient. If you encounter any resistance, insert or operate it slowly. Do not force it in.

8. Handling of Endoscope

When holding Endoscope, make sure to hold it by the control portion. Handling it up by the insertion portion or LG flexible portion is difficult to hold and may exert an unnatural force, resulting in instrument failure.

Questions? Contact FDA/CDRH/OCE/DID at CDRH-FOISTATUS@fda.hhs.gov or 301-796-8118

Record processed under FOIA #2015-10057 7/7/16

Contents

(Preparation and Operation)

Important Safety Information 2

Preface 6

Conventions Used in This Manual 6

Chapter 1 Safety 1-1

Chapter 2 Composition of 200 System Endoscope Set and System Configuration .. 2-1
- 2.1 Composition of 200 System Endoscope Set 2-2
- 2.2 System Configuration 2-4

Chapter 3 Names and Functions of Parts 3-1

Chapter 4 Control Portion 4-1
- 4.1 How to Operate the Bending Mechanism 4-2
- 4.2 Valve Control Buttons and Forceps Inlet 4-4
- 4.3 Remote Operating Switches 4-5
- 4.4 How to Operate Forceps Elevator Mechanism 4-6

Chapter 5 Preparation for Use of the EVE Endoscope 5-1
- 5.1 Preparing Equipment 5-2
- 5.2 Connecting the Endoscope 5-3
- 5.3 Inspection of Endoscope 5-5
- 5.4 Inspection of Forceps 5-9

Chapter 6 Method of Use 6-1
- 6.1 Preparation 6-2
- 6.2 Insertion and Observation 6-3
- 6.3 Biopsy 6-6
- 6.4 ERCP 6-8
- 6.5 Pulling Out the Endoscope 6-10

Chapter 7 Image Recording 7-1
- 7.1 Taking Photographs 7-2
- 7.2 Printing Using the Video Printer 7-3
- 7.3 Recording Using a Video Cassette Recorder 7-6

Appendix Appendix-1
- Main Specifications Appendix-2
- Trouble Shooting Appendix-5
- Warranty and After-Sales Service Appendix-7
- Index Appendix-8

Questions? Contact FDA/CDRH/OCE/DID at CDRH-FOISTATUS@fda.hhs.gov or 301-796-8118

Record processed under FOIA #2015-10057 7/7/16

(Cleaning. Disinfection and Storage)

Chapter 8 Washing 8-1
8.1 Methods of Washing 8-2
8.2 Conditions of Washing 8-3
8.3 Necessary Equipment and Materials 8-4
8.4 First Washing 8-6
8.5 Second Washing 8-8

Chapter 9 Chemical Disinfection 9-1
9.1 Methods of Chemical Disinfection 9-2
9.2 Conditions of Disinfection 9-3
9.3 Chemical Disinfection of Endoscope 9-4
9.4 Washing Endoscope by Water 9-6
9.5 Washing and Disinfecting Air/Water Button, Suction Button, J Piping, Cleaning Brush and Distal End Cap 9-10
9.6 Washing and Disinfecting Biopsy Forceps 9-11
9.7 Washing and Disinfecting Water Tank and Mouthpiece 9-12

Chapter 10 Gas Sterilization 10-1
10.1 Conditions of Gas Sterilization 10-2
10.2 EOG (Ethylene Oxide Gas) Sterilization 10-4

Chapter 11 Storage 11-1

(Electrosurgical Instruments)

Chapter 12 Treatment with Electrosurgical Instruments 12-1
12.1 Preparing and Inspecting Equipment 12-2
12.2 Polypectomy 12-7
12.3 Papillotomy 12-11

Questions? Contact FDA/CDRH/OCE/DID at CDRH-FOISTATUS@fda.hhs.gov or 301-796-8118

Record processed under FOIA #2015-10057 7/7/16

Preface

This manual describes how to use Duodeno EVE Endoscopes (side viewing).

Regarding their use, this manual describes endoscopic observation of the upper digestive tract, tissue sampling with biopsy forceps and papillotomy with electrosurgical instrument. It also explains taking photographs, printing and VCR image recording during endoscopic observation.

These Endoscopes are used in combination with the EPX-201 processor, cart and hard copy unit.
For information on how to use the processor and hard copy unit, refer to the respective operation manuals.

Conventions Used in This Manual

This manual uses the following conventions to make it easy to understand operations.

■General conventions

Convention	Meaning
⚠	Indicates a potential danger that may harm to people.
⚠WARNING	Explains the dangerous conditions that may cause to death or serious accident unless it is avoided.
⚠CAUTION	Explains the conditions that may cause to light or medium injury unless it is avoided.
CAUTION	Explains the conditions that may damage to equipment unless it is avoided.
(1), (2), (3), ···	Consecutive numbers in operating procedures indicate the sequence of successive operations.
[Note]	Indicates a comment or supplementary information.
➡	Indicates a reference.

Questions? Contact FDA/CDRH/OCE/DID at CDRH-FOISTATUS@fda.hhs.gov or 301-796-8118

Record processed under FOIA #2015-10057 7/7/16

Chapter 1 Safety

This chapter summarizes the information necessary for safe use of Endoscope.

Questions? Contact FDA/CDRH/OCE/DID at CDRH-FOISTATUS@fda.hhs.gov or 301-796-8118

Record processed under FOIA #2015-10057 7/7/16

Chapter 1 Safety

1. Precautions in Using Endoscope

1) Inspection before use

Make sure to inspect the equipment before use according to the procedures provided in this manual, to avoid unexpected accidents, and take full advantage of the equipment's capabilities.
If the inspection result shows any abnormality, do not use the same equipment.

2) Combination of equipment

The Endoscope may be used in combination with peripherals. To avoid an electric shock accident, do not use any peripherals than the ones specified in this operation manual.

3) Maintenance

The equipment will wear out and degrade after repeated use for a long period. Have it checked by specialists once every six months or once every 100 cases. Also have it checked if there is anything wrong with the equipment.
Do not disassemble or modify the equipment.

2. Washing and Disinfection

This product has not been sterilized. When using it for the first time, perform disinfection or sterilization suitable for the application.
When reusing it, wash and disinfect it according to the procedures in the manual (Cleaning, Disinfection and Storage). Inadequate washing may result in infection. Wash the insertion portion and channels especially carefully.
Wear rubber gloves during chemical washing and disinfection to protect your skin and to prevent infection.

3. "⚠ Warning" and "⚠ Caution" Messages Appearing in Individual Chapters

Chapter 5 Preparation for Use of the EVE Endoscope

The use of abnormal equipment will cause wrong diagnosis or injury. If the inspection result shows any abnormality, do not use the same equipment.

5.2 Connecting the Endoscope

Touching the LG connector with hands immediately after use of the Endoscope may cause to burn. Do not touch the LG connector tip until it will be cooled down (5 minutes).

Questions? Contact FDA/CDRH/OCE/DID at CDRH-FOISTATUS@fda.hhs.gov or 301-796-8118

Record processed under FOIA #2015-10057 7/7/16

Endoscope may be adhered to mucous membrane, resulting in damage to the mucous membrane. Set a suction pressure at 53kPa or less.

5.3.5 Inspecting Objective Lens

Viewing the light of light guide directly may damage your eyes. Switch off the light before inspecting the lens.

Chapter 6 Method of Use

6.2 Insertion and Observation

Energy of illumination may burn. Do not allow the distal end to touch the same part for 5 minutes or more.

6.3 Biopsy

Pressing forceps strongly against the digestive tract wall may damage it. Do not press them the digestive tract wall with undue force.

6.4 ERCP

Pressing the cannulation tube strongly against the digestive tract wall may damage it. Do not press it against digestive tract wall with undue force.

Chapter 8 Washing

8.5 Second Washing

Touching the LG connector with hands immediately after use of the Endoscope may cause to burn. Do not touch the LG connector tip until it will be cooled down (5 minutes).

8.5.10 Washing Entire Endoscope

Cleaning liquid might flow into a patient's body. Alter cleaning, wash away any remaining chemical with water.

Chapter 9 Chemical Disinfection

9.4.1 Injecting Clean Water

Disinfecting liquid might flow into a patient's body. Alter immersing into chemical solution, wash away any remaining chemical liquid with clean water.

Chapter 10 Gas Sterilization

Applying gas sterilization to wet parts presents incomplete sterilization. Proceed gas sterilization after vaporizing water out of Endoscope.

Gas remaining in Endoscope after gas sterilization is harmful to human body. Proceed aeration after gas sterilization.

Chapter 11 Storage

Storage of Endoscope in a carrying case may cause infection. Do not store Endoscope in a carrying case.

Questions? Contact FDA/CDRH/OCE/DID at CDRH-FOISTATUS@fda.hhs.gov or 301-796-8118

Record processed under FOIA #2015-10057 7/7/16

Chapter 12 Treatment with Electrosurgical Instruments

12.1 Preparing and Inspecting Equipment and Materials

The operation of the pacemaker will be malfunctioned by the electrosurgical instruments. Always keep pacemaker users away from electrosurgical instruments.

Ignition and explosion may be occurred. Replace any flammable gas in body cavities with nonflammable gas before using the electrosurgical instruments. Never use the electrosurgical instruments in atmosphere of flammable gas.

12.1.3 Connecting Electrosurgical Instruments

Wrong connection will cause electric shock accident and burns. Connect surgical instruments correctly in accordance with the operation manual.

12.1.4 Setting the Conditions of Surgery

Leakage current may cause burns. Operate the instruments within specified output range.

12.2 Polypectomy

Ignition and explosion may be occurred. Replace any flammable gas in body cavities with nonflammable gas before using the electrosurgical instruments.

Leakage current may cause burns. Prevent patient's body from touching electric conductor such as metal part of bed. Physicians and assistants should wear rubber gloves.

12.3 Papillotomy

Ignition and explosion may be occurred. Replace any flammable gas in body cavities with nonflammable gas before using the electrosurgical instruments.

Leakage current may cause burns. Prevent patient's body from touching electric conductor such as metal part of bed. Physicians and assistants should wear rubber gloves.

Questions? Contact FDA/CDRH/OCE/DID at CDRH-FOISTATUS@fda.hhs.gov or 301-796-8118

Record processed under FOIA #2015-10057 7/7/16

Chapter 2 Composition of 200 System Endoscope Set and System Configuration

This chapter describes the composition of 200 System Endoscope set and system configuration.

2.1 Composition of 200 System Endoscope Set 2-2
2.2 System Configuration 2-4

Questions? Contact FDA/CDRH/OCE/DID at CDRH-FOISTATUS@fda.hhs.gov or 301-796-8118

Record processed under FOIA #2015-10057 7/7/16

Chapter 2 Composition of 200 System Endoscope Set and System Configuration

2.1 Composition of 200 System Endoscope Set

The 200 System Endoscope set is provided in a carrying case. The set consists of the following items.

[Note] Figures in parentheses indicate quantities.

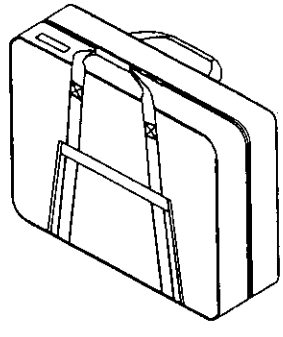

Carrying Case (1)

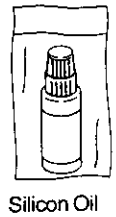

Silicon Oil
SLC-2000 (1)

Lens Cleaner
SLC-1 (1)

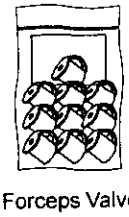

Forceps Valve
FOV-DV7 (10)

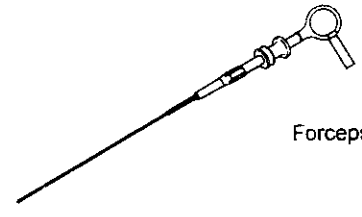

Forceps (1)

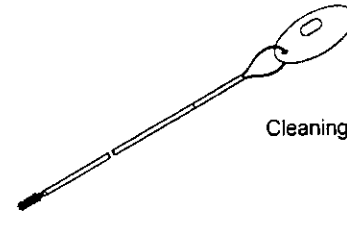

Cleaning Brush (1)

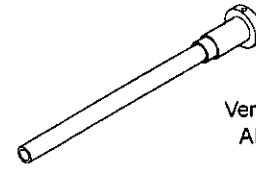

Ventilation Adapter
AD-7 (1)

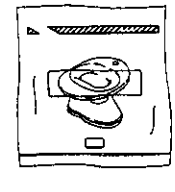

Mouthpiece
MPC-ST (1)

Questions? Contact FDA/CDRH/OCE/DID at CDRH-FOISTATUS@fda.hhs.gov or 301-796-8118

Record processed under FOIA #2015-10057 7/7/16

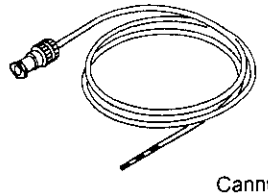

Cannulation Tube (1)

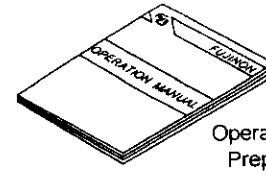

Operation Manual
Preparation and Operation (1)
Cleaning, Disinfection and Storage (1)
Electrosurgical Instruments (1)

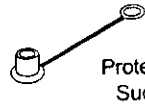

Protective Cap
Suction (1)

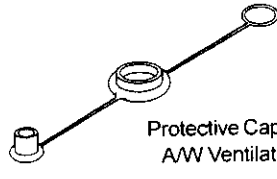

Protective Cap
A/W Ventilation Connector (1)

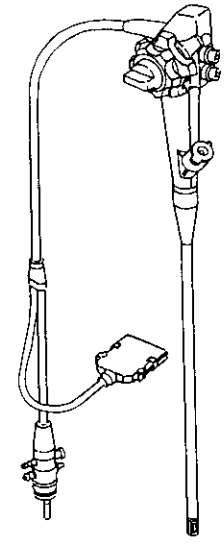

Endoscope (1)

S Connector Cap
CAP-E (1)

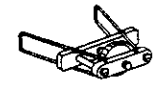

Waterproof Cap (1)

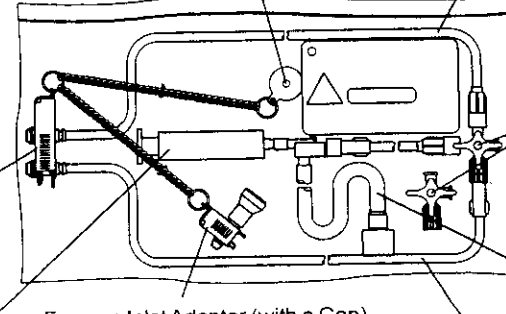

Questions? Contact FDA/CDRH/OCE/DID at CDRH-FOISTATUS@fda.hhs.gov or 301-796-8118

Record processed under FOIA #2015-10057 7/7/16

2.2 System Configuration

You may use the 200 System Endoscope with various peripherals attached to it. These peripherals are available separately. Extension makes the following possible.

- Endoscopic treatment
- Ultrasonography through forceps channel
- Recording of Video images
- Printer output

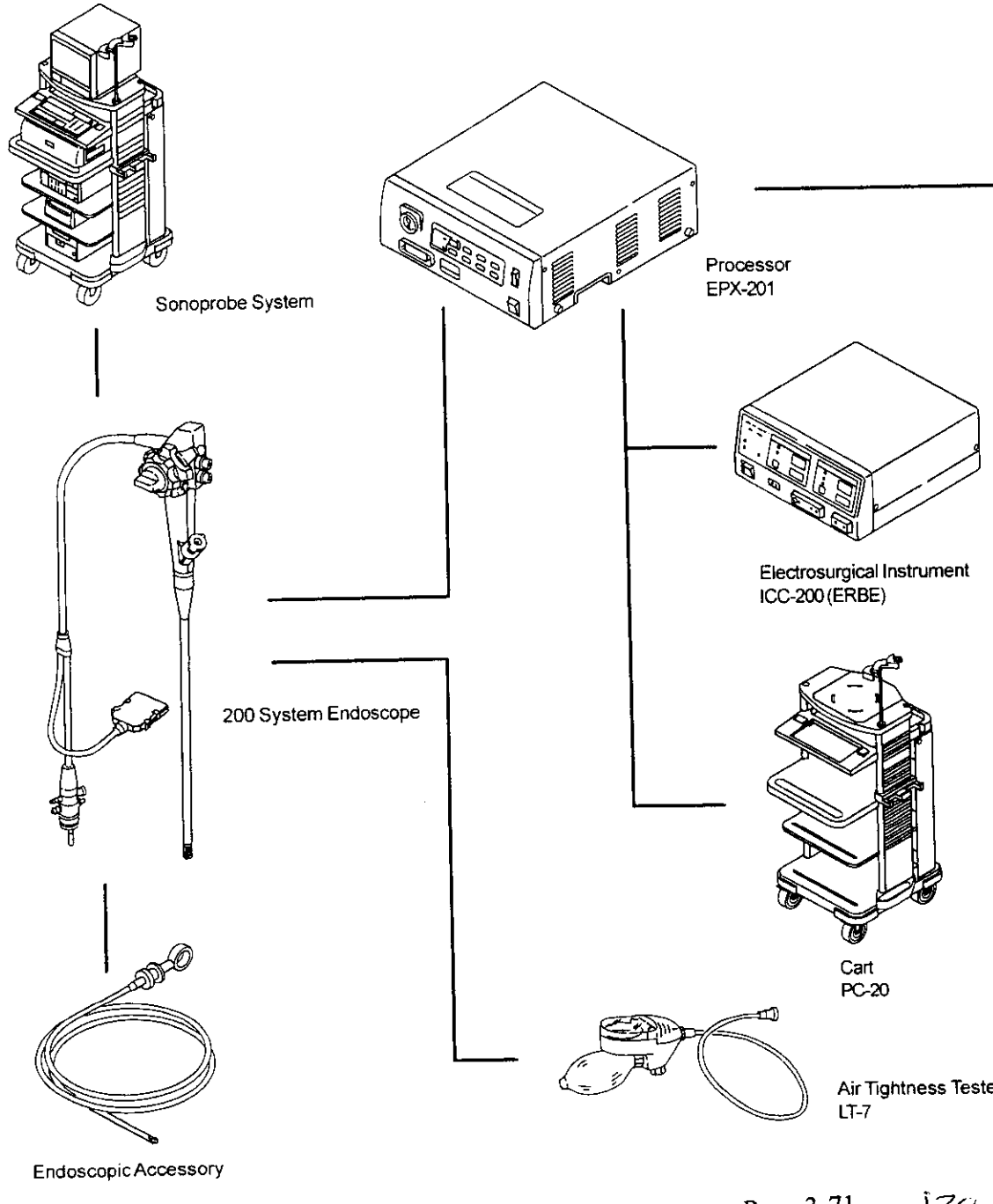

Questions? Contact FDA/CDRH/OCE/DID at CDRH-FOISTATUS@fda.hhs.gov or 301-796-8118

Record processed under FOIA #2015-10057 7/7/16

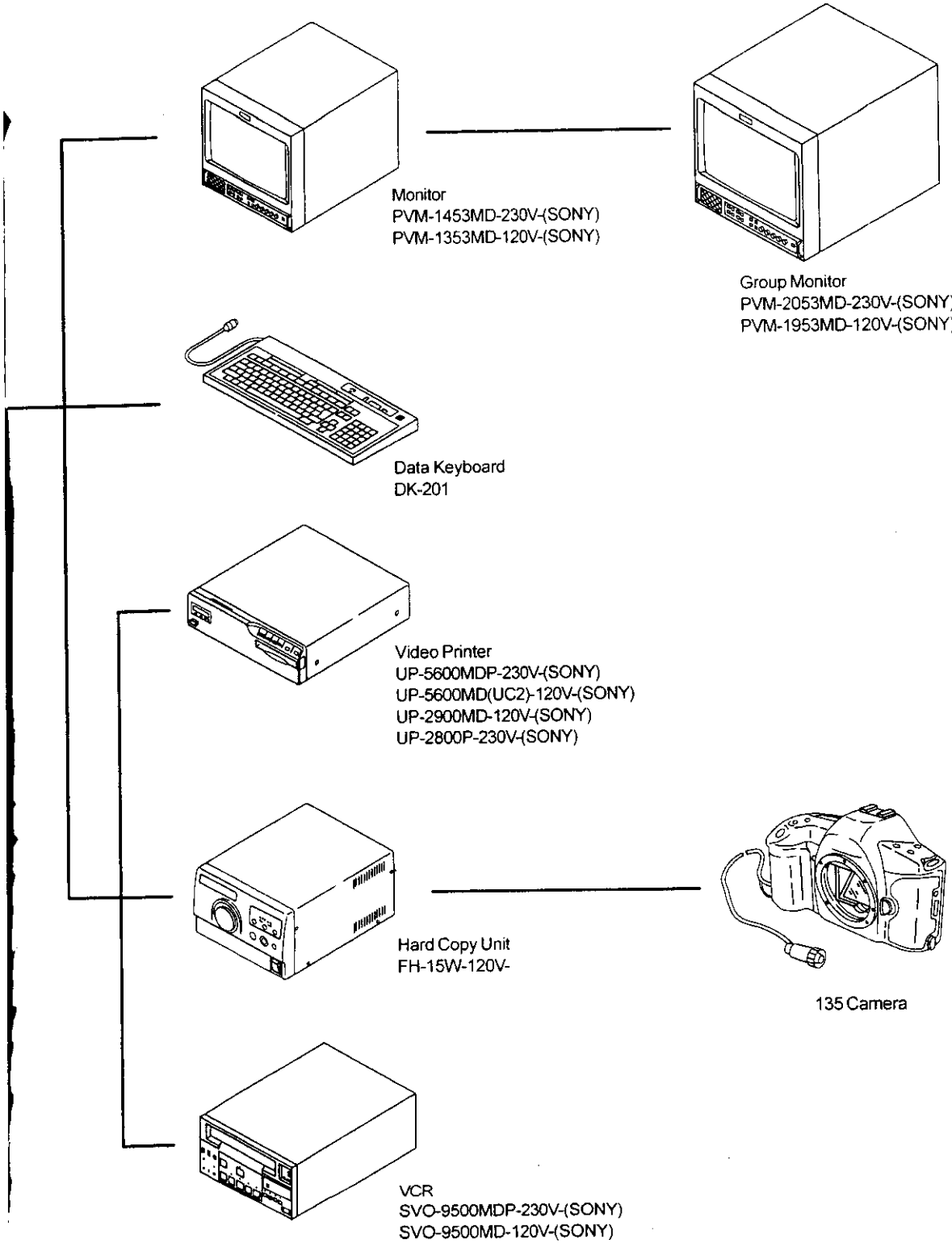

Questions? Contact FDA/CDRH/OCE/DID at CDRH-FOISTATUS@fda.hhs.gov or 301-796-8118

Record processed under FOIA #2015-10057 7/7/16

Questions? Contact FDA/CDRH/OCE/DID at CDRH-FOISTATUS@fda.hhs.gov or 301-796-8118

Record processed under FOIA #2015-10057 7/7/16

Chapter 3 Names and Functions of Parts

This chapter describes the names and functions of 200 series Endoscope parts as well as the composition of the main body.

Questions? Contact FDA/CDRH/OCE/DID at CDRH-FOISTATUS@fda.hhs.gov or 301-796-8118

Record processed under FOIA #2015-10057 7/7/16

Chapter 3 Names and Functions of Parts

The main body of the 200 System Endoscope consists of the following parts.

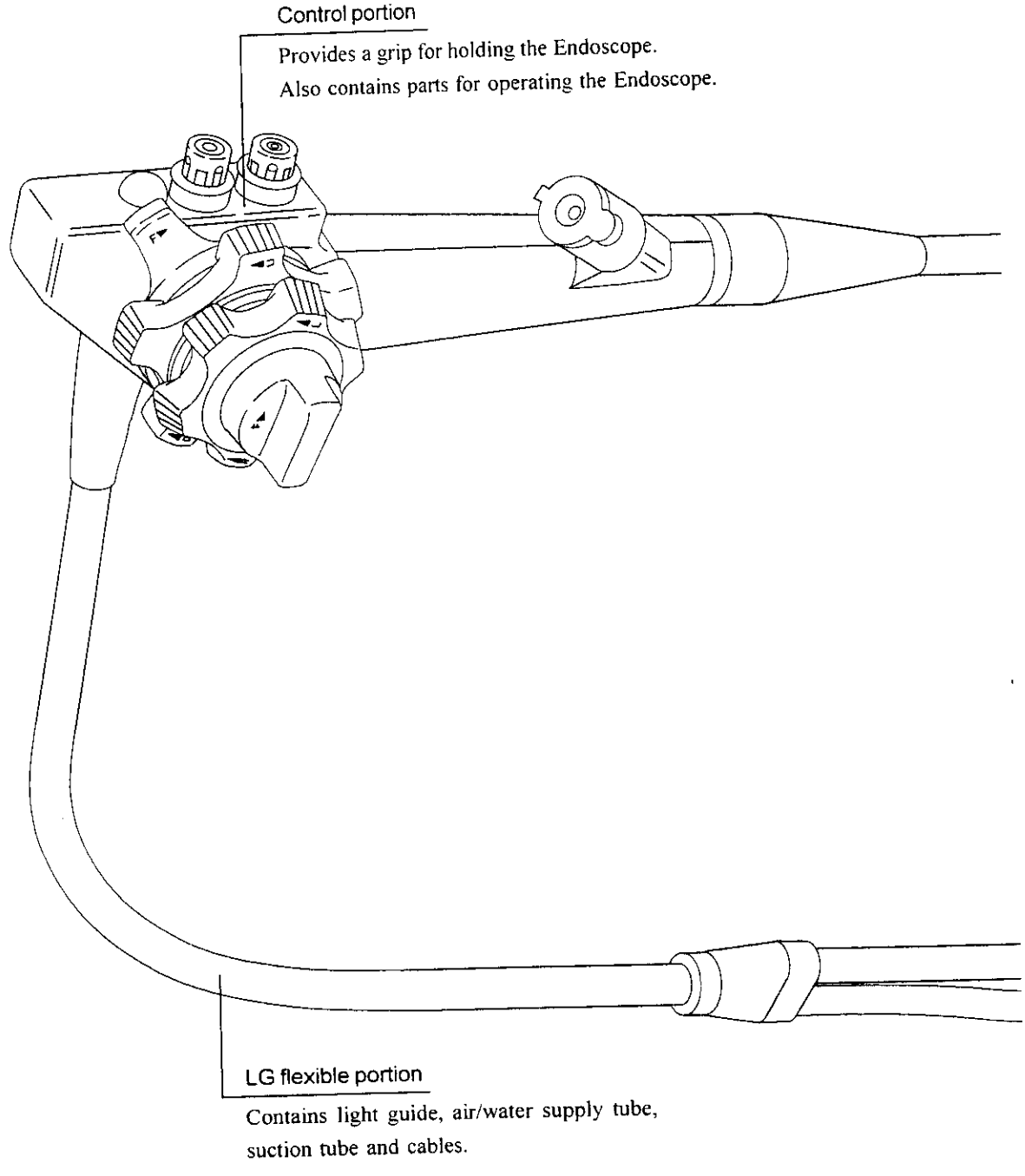

Questions? Contact FDA/CDRH/OCE/DID at CDRH-FOISTATUS@fda.hhs.gov or 301-796-8118

Record processed under FOIA #2015-10057 7/7/16

Enlarged view of distal end

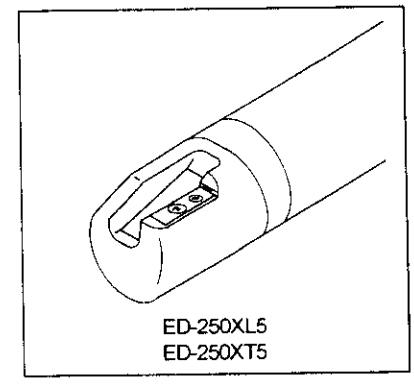

* Insertion portion

This portion is inserted into body cavities and contains the distal end, bending portion and flexible portion.

Distal end *

Contains objective lens, air/water nozzles, forceps channel, etc. Air/water supply and suction are controlled by buttons on the control portion.

Flexible portion *

Connects bending portion and control portion.
The Endoscope can be inserted into the body cavity up to this portion.

Bending portion *

Bend this portion with the knobs on the control portion.

EVE connector

This connector connects to the EVE connector socket on the processor.

Feed water connector

Connects to the water tank.

Ventilation connector

Connects to the airtight tester or ventilation adapter.

LG connector

This connector connects to the scope socket on the processor.

Suction connector

Accepts tube from suction unit.

S terminal

Accepts S cord when using electrosurgical instrument (electric cautery).

Questions? Contact FDA/CDRH/OCE/DID at CDRH-FOISTATUS@fda.hhs.gov or 301-796-8118

Record processed under FOIA #2015-10057 7/7/16

Questions? Contact FDA/CDRH/OCE/DID at CDRH-FOISTATUS@fda.hhs.gov or 301-796-8118

Record processed under FOIA #2015-10057 7/7/16

Chapter 4 Control Portion

The control portion contains the angle knobs for operating the bending mechanism and valves for air/water supply and suction, etc.
This chapter describes the operations and functions of these parts.

4.1 How to Operate the Bending Mechanism 4-2
4.2 Valve Control Buttons and Forceps Inlet 4-4
4.3 Remote Operating Switches 4-5
4.4 How to Operate Forceps Elevator Mechanism 4-6

Questions? Contact FDA/CDRH/OCE/DID at CDRH-FOISTATUS@fda.hhs.gov or 301-796-8118

Record processed under FOIA #2015-10057 7/7/16

Chapter 4 Control Portion

4.1 How to Operate the Bending Mechanism

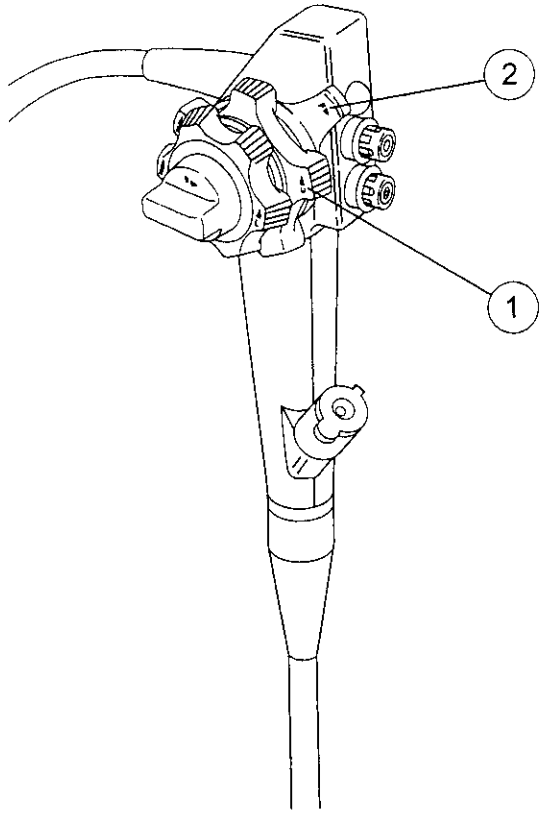

① Up-down angle knob

To bend the bending portion upward and downward.

<When up-down locking lever is slanted toward F ► >

Turn the up-down angle knob in the direction of U ► to bend the bending portion upward. Turn it in the direction of D ► to bend the bending portion downward.

Release the up-down angle knob to unlock the bending portion. It will unbend a little.

<When up-down locking lever is slanted in the direction opposite to F ► >

Release the up-down angle knob to lock the bending portion. It will remain bent.

② Up-down locking lever

Used to retain the bent state of the bending portion. It switches between Lock and Unlock.

Slant this lever in the direction opposite to F ► to lock the bending portion. Slant it in the direction of F ► to unlock the bending portion. Operate this lever either before or after operating the up-down angle knob.

[Note]

Lock : retains bent state of bending portion.

Unlock : allows external force to bend bending portion freely.

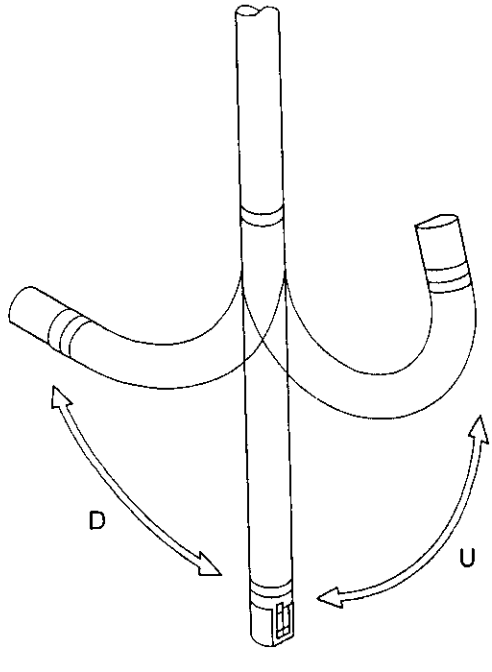

Questions? Contact FDA/CDRH/OCE/DID at CDRH-FOISTATUS@fda.hhs.gov or 301-796-8118

Record processed under FOIA #2015-10057 7/7/16

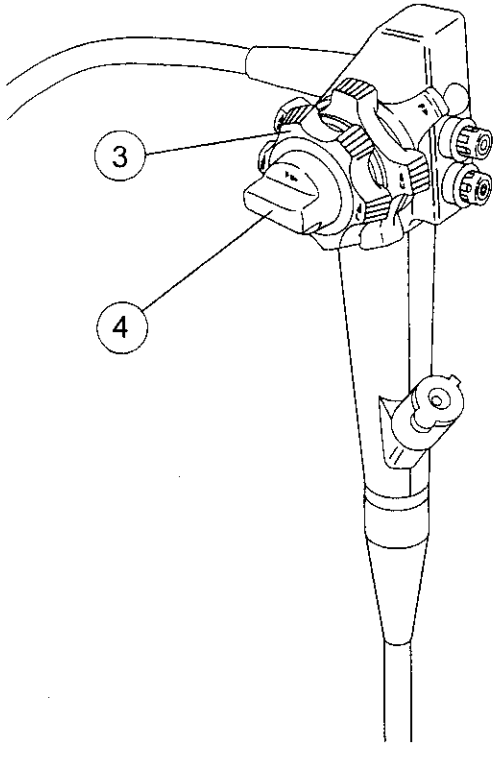

③ Left-right angle knob

To bend the bending portion right or left.

<When left-right locking knob is turned forward F ► >

Turn the left-right angle knob in the direction of L ► to bend the bending portion to the left. Turn it in the direction of R ► to bend the bending portion to the right.

Release the left-right angle knob to unlock the bending portion. It will unbend a little.

<When the left-right locking knob is turned in the direction opposite to F ► >

Release the left-right angle knob to lock the bending portion. It will remain bent.

④ Left-right locking knob

To retain the bent state of the bending portion. It switches between Lock and Unlock.

Turn this knob in the direction opposite to F ► locks the bending portion. Turning it in the direction of F ► unlocks the bending portion. Operate this knob either before or after operating the left-right angle knob.

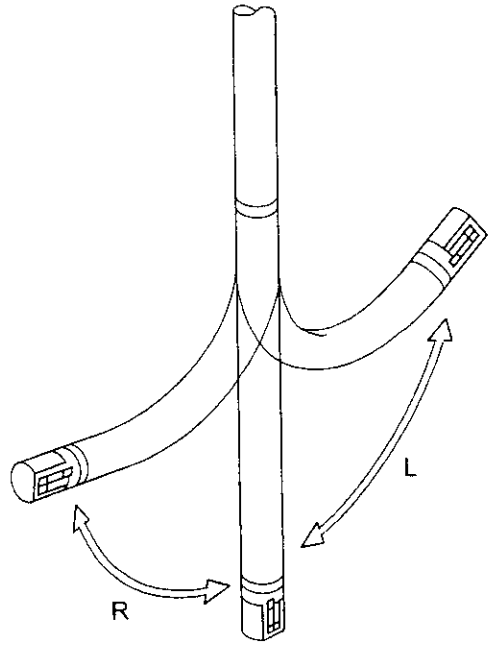

Questions? Contact FDA/CDRH/OCE/DID at CDRH-FOISTATUS@fda.hhs.gov or 301-796-8118

Record processed under FOIA #2015-10057 7/7/16

4.2 Valve Control Buttons and Forceps Inlet

⑤ Suction button

Allows aspiration through forceps channel (port) in distal end.
Suction is activated while this button is depressed.

⑥ Air/water button

Used to blow air or water onto the surface of objective lens from the nozzle in distal end.
To supply air, stop the hole in the center of this button with a finger.
To supply water, just depress this button.

⑦ Forceps inlet

Opening for passing through endoscopic accessory.
Normally, the forceps valve is attached.

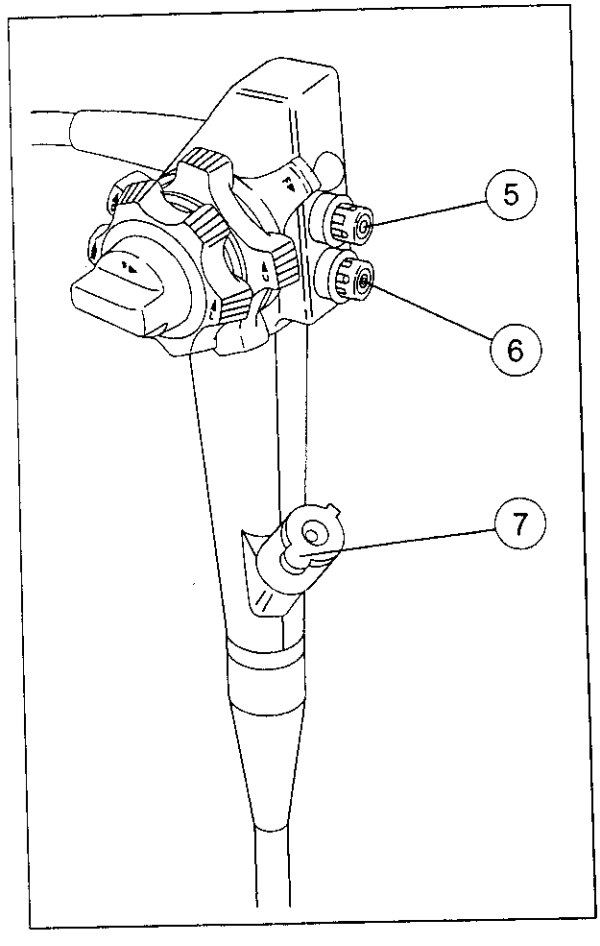

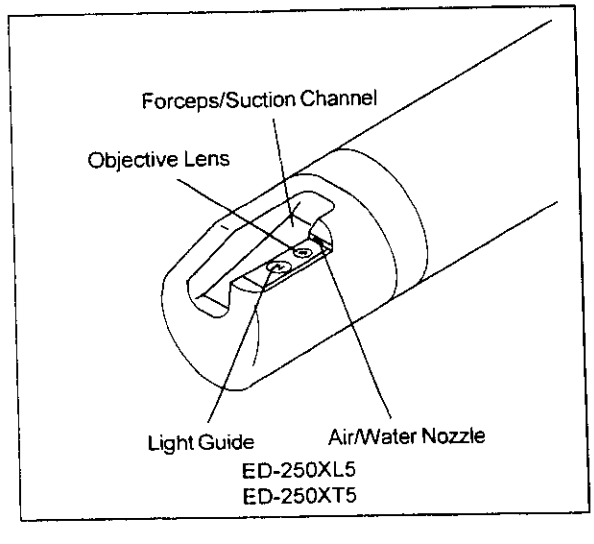

Questions? Contact FDA/CDRH/OCE/DID at CDRH-FOISTATUS@fda.hhs.gov or 301-796-8118

Record processed under FOIA #2015-10057 7/7/16

4.3 Remote Operating Switches

⑧ FR Switch

This is the remote switch for still image and the hard copy unit. The screen image is frozen while this button is being pushed. Image freezing is canceled a few seconds after it is released.

If the switch is pushed again while the image is still frozen, a photo signal is output to the device connected to the hard copy terminal.

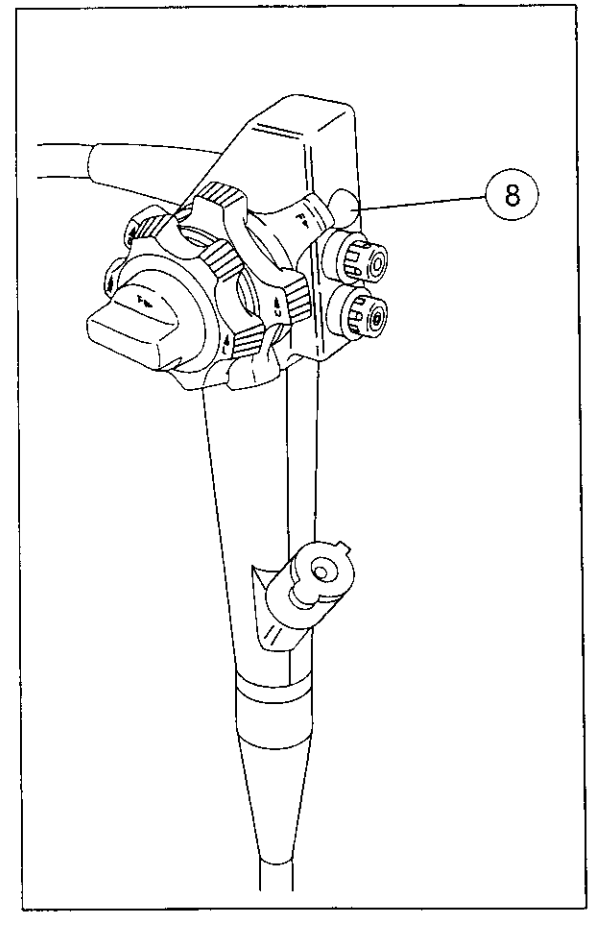

Questions? Contact FDA/CDRH/OCE/DID at CDRH-FOISTATUS@fda.hhs.gov or 301-796-8118

Record processed under FOIA #2015-10057 7/7/16

4.4 How to Operate Forceps Elevator Mechanism

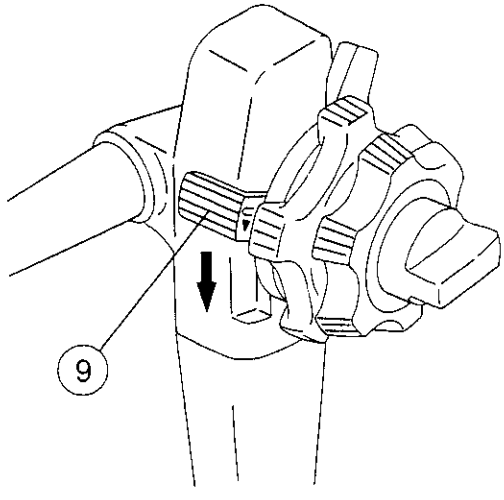

⑨ Forceps Elevator Lever

Used to control forceps elevator base.

<When forceps elevator lever is slanted toward the opposite side of the direction of U ► >

The forceps elevator base on the distal end of the Endoscope moves downward.

The endoscopic accessory in the field of view move toward the lower part of the monitor.

<When forceps elevator lever is slanted toward the direction of U ► >

The forceps elevator base on the distal end of the Endoscope moves upward.

The endoscopic accessory in the field of view move toward the upper part of the monitor.

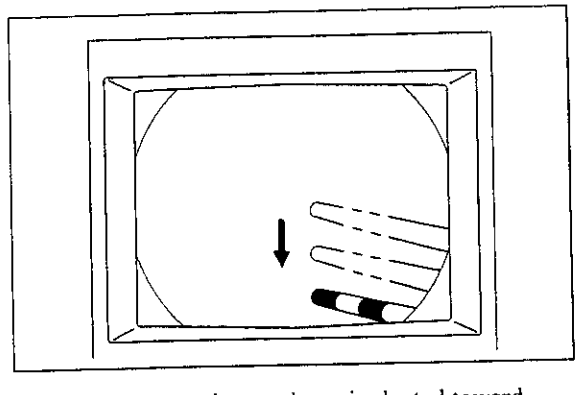

<When forceps elevator lever is slanted toward the opposite side of the direction of U ► >

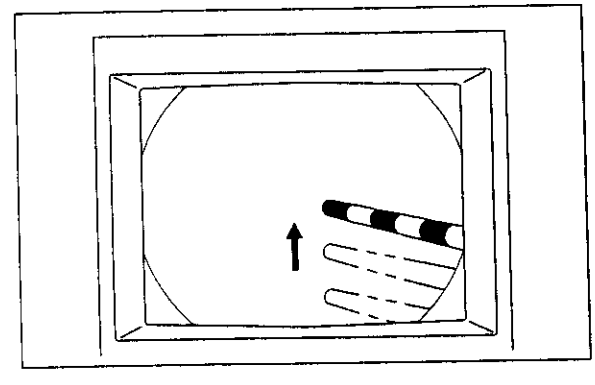

<When forceps elevator lever is slanted toward the direction of U ► >

Questions? Contact FDA/CDRH/OCE/DID at CDRH-FOISTATUS@fda.hhs.gov or 301-796-8118

Record processed under FOIA #2015-10057 7/7/16

Chapter 5 Preparation for Use of the EVE Endoscope

This chapter describes the system necessary for endoscopy.

5.1 Preparing Equipment 5-2
5.2 Connecting the Endoscope 5-3
5.3 Inspection of Endoscope 5-5
5.3.1 Inspecting Insertion Portion 5-5
5.3.2 Inspecting the Bending Mechanism 5-5
5.3.3 Inspecting the Forceps Elevator Mechanism 5-6
5.3.4 Inspecting the Air/Water Supply, Suction and Forceps Channel 5-6
5.3.5 Inspecting the Objective Lens 5-8
5.4 Inspection of Forceps 5-9

Questions? Contact FDA/CDRH/OCE/DID at CDRH-FOISTATUS@fda.hhs.gov or 301-796-8118

Record processed under FOIA #2015-10057 7/7/16

Chapter 5 Preparation for Use of the EVE Endoscope

⚠ CAUTION

The use of abnormal equipment will cause wrong diagnosis or injury. If the inspection result shows any abnormality, do not use the same equipment.

5.1 Preparing Equipment

(1) Move the cart with the processor to the place where the Endoscope is to be used.

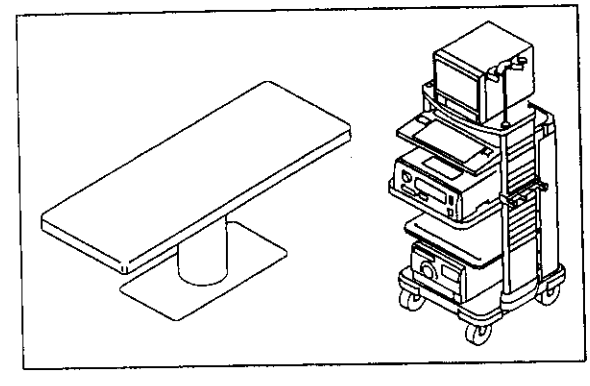

(2) After turning the main switch on the cart to the OFF position, plug the power cord from the cart into a protective earth receptacle.

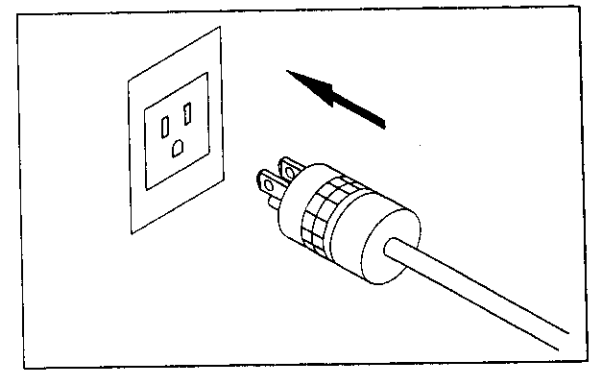

(3) Mount the suction bottle on the suction unit.

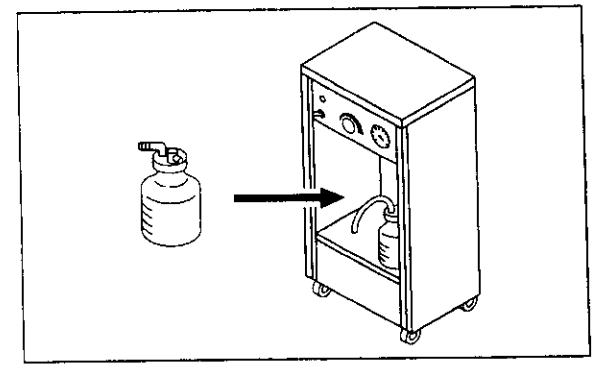

132

Questions? Contact FDA/CDRH/OCE/DID at CDRH-FOISTATUS@fda.hhs.gov or 301-796-8118

Record processed under FOIA #2015-10057 7/7/16

(4) Mount the water tank, 80% filled with water, on the processor.

[Note]
Change the water in the water tank every day.

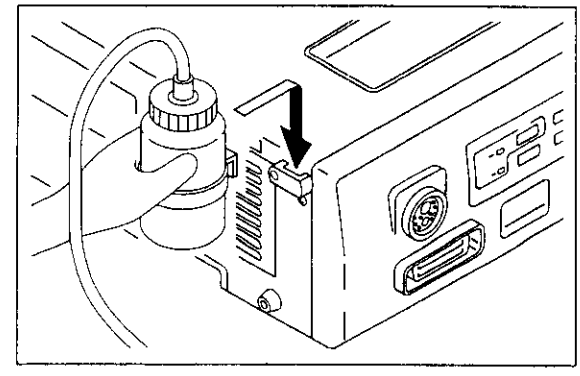

5.2 Connecting the Endoscope

⚠ CAUTION

Touching the LG connector with hands immediately after use of the Endoscope may cause to burn.
Do not touch the LG connector tip until it will be cooled down (5 minutes).

(1) Insert the LG connector of the Endoscope into the Endoscope socket on the processor.

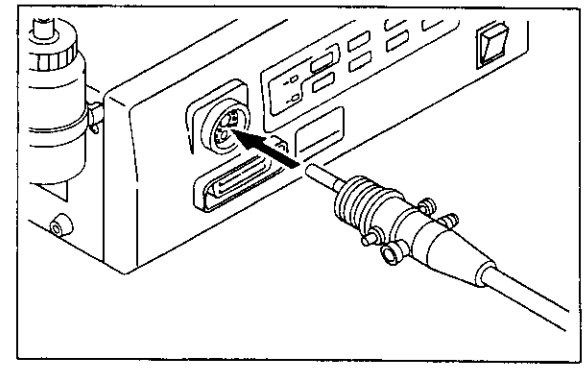

(2) Insert the EVE connector of the Endoscope into the EVE connector socket on the processor.

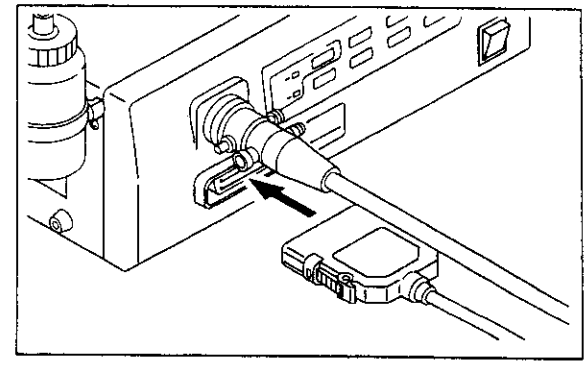

133

Questions? Contact FDA/CDRH/OCE/DID at CDRH-FOISTATUS@fda.hhs.gov or 301-796-8118

Record processed under FOIA #2015-10057 7/7/16

(3) Insert the connector of the water tank into the feed water connector on the Endoscope.

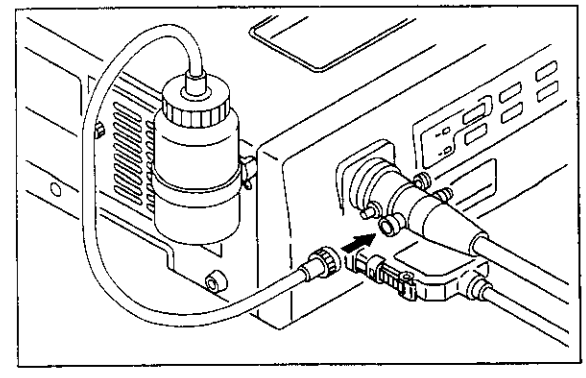

(4) Connect the suction unit and suction connector of the Endoscope to the suction tube.

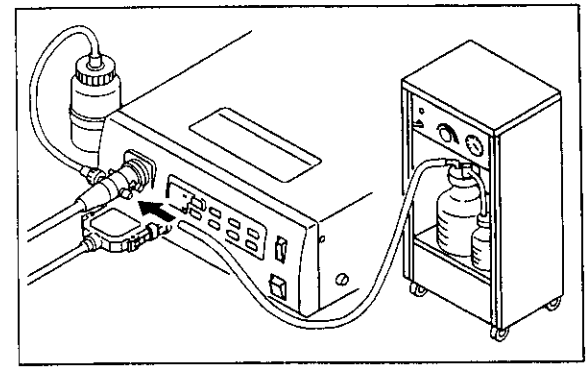

⚠ CAUTION

Endoscope may be adhered to mucous membrane, resulting in damage to the mucous membrane.
Set a suction pressure at 53kPa or less.

(5) Set the suction pressure to 40 to 53 kPa (300 to 400 mmHg).

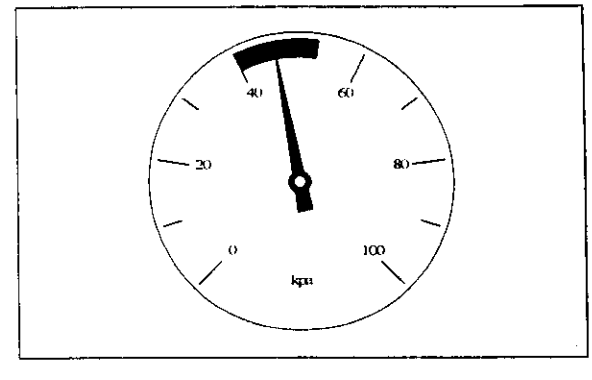

134

Questions? Contact FDA/CDRH/OCE/DID at CDRH-FOISTATUS@fda.hhs.gov or 301-796-8118

Record processed under FOIA #2015-10057 7/7/16

5.3 Inspection of Endoscope

5.3.1 Inspecting the Insertion Portion

Visually check the insertion portion (distal end, bending portion and flexible portion) for abnormalities such as flaws or dents and for sharp edges on protrusions that may injure the patient.

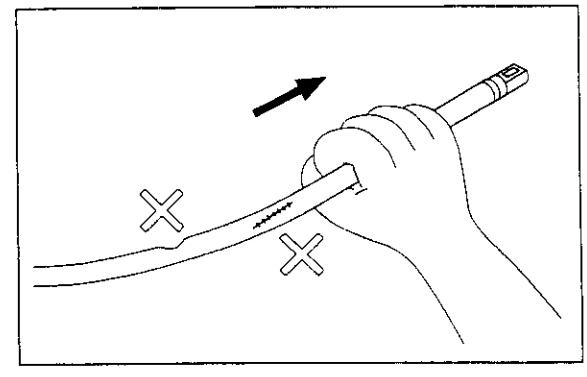

5.3.2 Inspecting the Bending Mechanism

(1) Unlock the up-down locking lever and left-right locking knob by turning them in the direction of F ►.

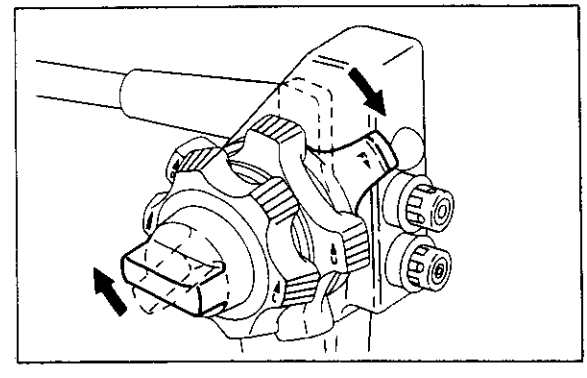

(2) Turn the up-down angle knob and left-right angle knob in the U, D, L and R directions until they stop.
Check that the bending portion turns smoothly.

Check that releasing the knobs unbends the bending portion a little.

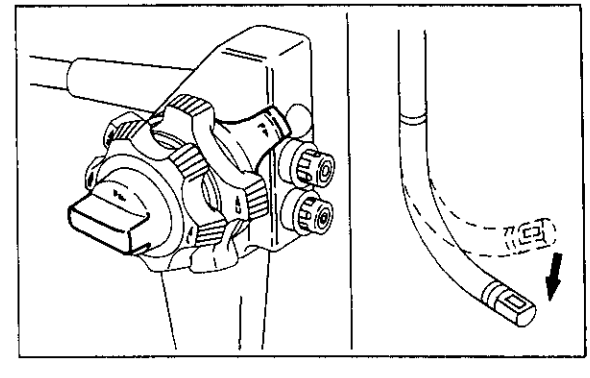

(3) Turn the up-down locking lever and left-right locking knob in the direction opposite to F ►, and then lock them.

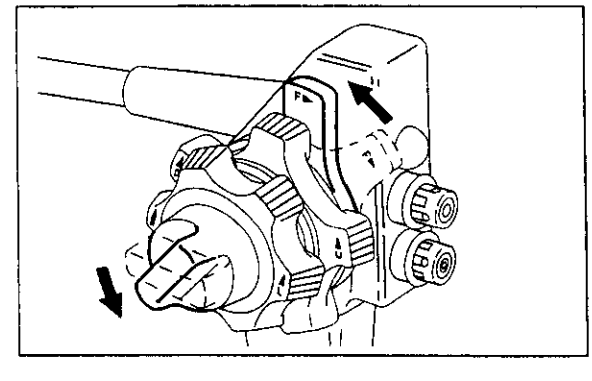

135

Questions? Contact FDA/CDRH/OCE/DID at CDRH-FOISTATUS@fda.hhs.gov or 301-796-8118

Record processed under FOIA #2015-10057 7/7/16

(4) Turn the angle knobs in similar manner as in step (2), and check how the bending portion bends. Here, the angle knobs should feel a little heavier than in step (2).
Check that bending portion retains its bent state after the angle knobs are released.

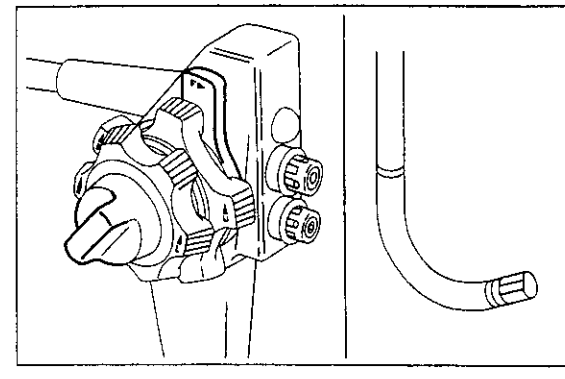

5.3.3 Inspecting the Forceps Elevator Mechanism

(1) Move forceps elevator lever.

(2) Check that the forceps elevator at the distal end of the Endoscope moves.

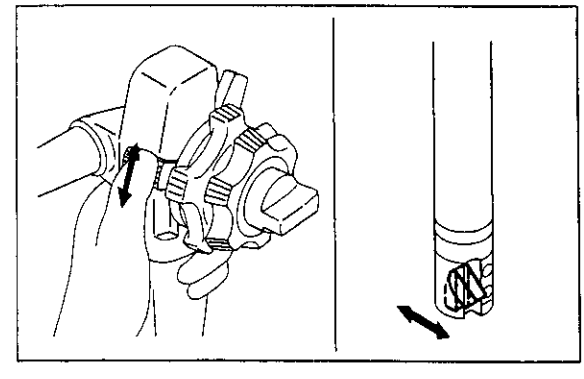

5.3.4 Inspecting the Air/Water Supply, Suction and Forceps Channel

(1) Switch on the power to the suction unit, cart and processor. Keep the lamp off.

(2) Have a glass of water ready.

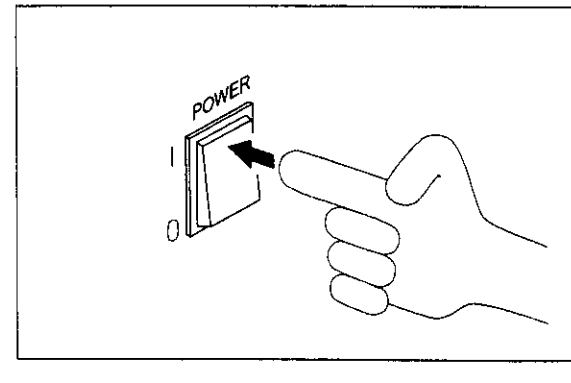

Questions? Contact FDA/CDRH/OCE/DID at CDRH-FOISTATUS@fda.hhs.gov or 301-796-8118

Record processed under FOIA #2015-10057 7/7/16

(3) Place the distal end of the Endoscope in air, depress the air/water button, and check that water comes out of the nozzle.

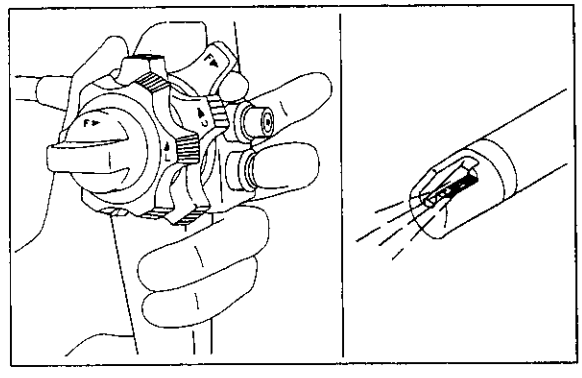

(4) Dip the distal end of the Endoscope in water, stop the center hole in air/water button with your finger, and check that air comes out of the nozzle.
Then take your finger off the hole and check that air does not come out of nozzle.

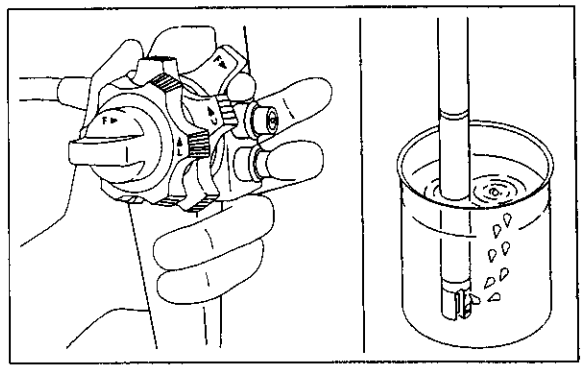

(5) Put a forceps valve in forceps inlet.
Dip the distal end of the Endoscope in water, and check that depressing the suction button sucks in water and that releasing it stops suction.

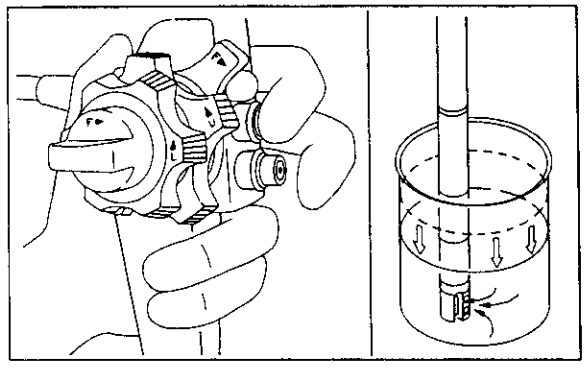

(6) Insert the forceps from the forceps inlet and check that their tips come smoothly out of the outlet in the distal end of the Endoscope.

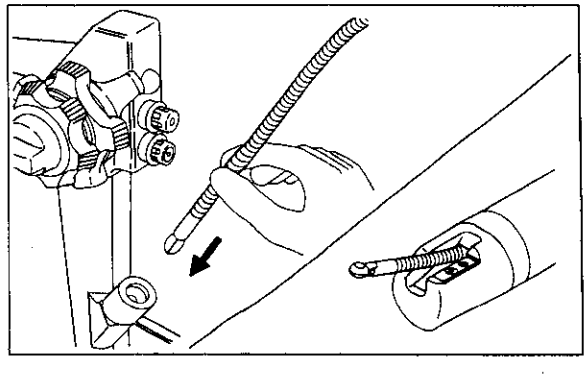

137

Questions? Contact FDA/CDRH/OCE/DID at CDRH-FOISTATUS@fda.hhs.gov or 301-796-8118

Record processed under FOIA #2015-10057 7/7/16

5.3.5 Inspecting the Objective Lens

⚠ CAUTION

Viewing the light of light guide directly may damage your eyes.
Switch off the light before inspecting the lens.

(1) Turn OFF the lamp.

Look at the distal end of the Endoscope at an angle and check that the objective lens is free of dirt or foreign matter.

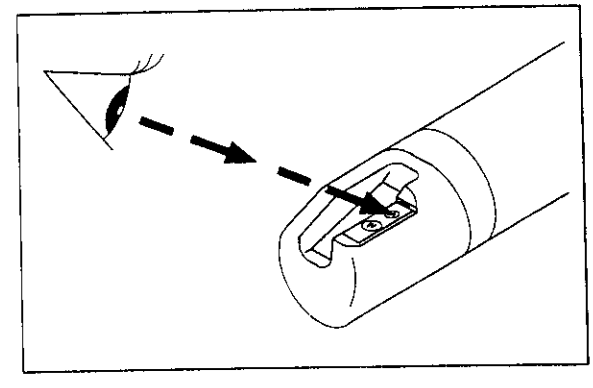

(2) If the lens is dirty, clean it.

[Note]
To clean the lens, wipe it with gauze (or something similarly soft) dampened with lens cleaner or ethanol.

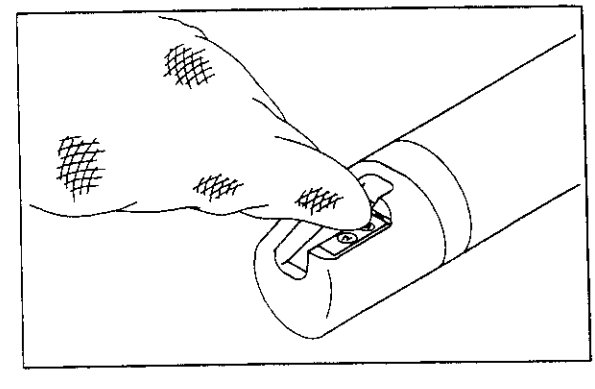

(3) Switch on the lamp and observe the endoscopic image on the monitor. Check that the image is free of cloudiness or blurs.

[Note]
If wiping does not remove cloudiness from the objective lens, it is likely that the Endoscope is not sufficiently airtight. Run an air tightness test with an air tightness tester LT-7.

→ "8.5.3 Air Tightness Test" (p.8-10)

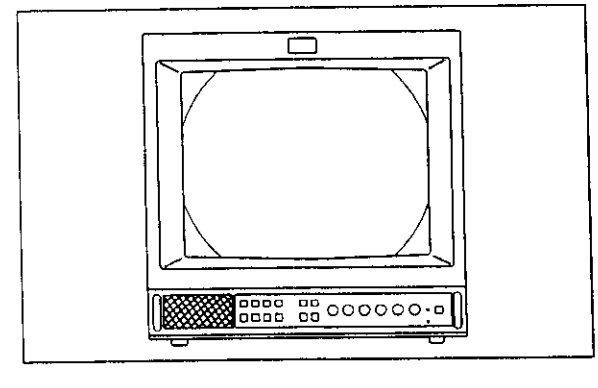

Questions? Contact FDA/CDRH/OCE/DID at CDRH-FOISTATUS@fda.hhs.gov or 301-796-8118

Record processed under FOIA #2015-10057 7/7/16

5.4 Inspection of Forceps

CAUTION

Bending forceps with a small curvature may break it.
Do not bend forceps with a curvature radius of 10 mm or less.

(1) Inspect the operation of the forceps.

Visually check the forceps for breakage or significant bends, and for sharp edges on protrusions that may injure the patient.

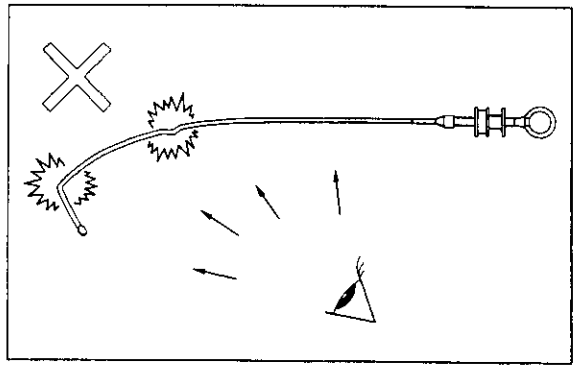

(2) Form the spring of the forceps into a double ring approximately 200 mm in diameter, as shown in the figure.

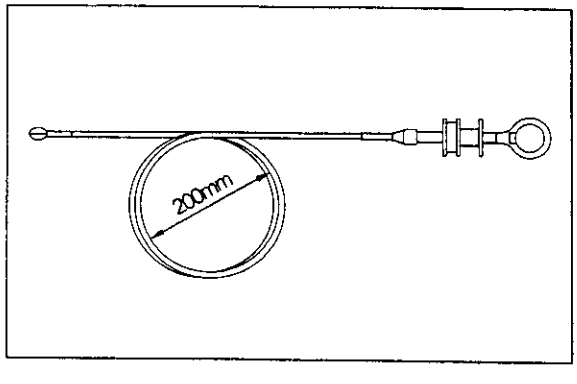

(3) Operate the handle of the forceps and check that their tips open and close.

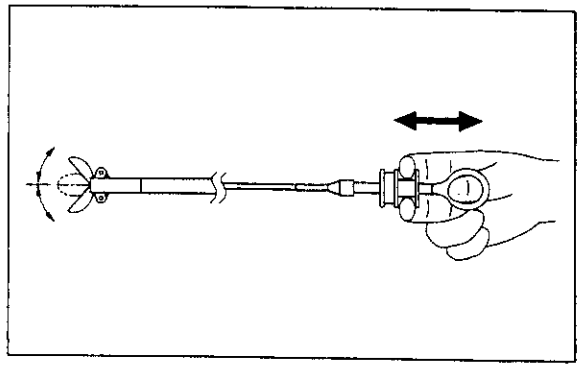

Questions? Contact FDA/CDRH/OCE/DID at CDRH-FOISTATUS@fda.hhs.gov or 301-796-8118

Record processed under FOIA #2015-10057 7/7/16

Questions? Contact FDA/CDRH/OCE/DID at CDRH-FOISTATUS@fda.hhs.gov or 301-796-8118

Record processed under FOIA #2015-10057 7/7/16

Chapter 6 Method of Use

This chapter outlines how to operate of the equipment, according to the general procedures. Regarding clinical procedures, use proper clinical judgment.

6.1 Preparation 6-2
6.1.1 Preparing the Necessary Equipment 6-2
6.1.2 Pretreatment of Patient 6-2
6.2 Insertion and Observation 6-3
6.3 Biopsy 6-6
6.4 ERCP 6-8
6.5 Pulling Out the Endoscope 6-10

Questions? Contact FDA/CDRH/OCE/DID at CDRH-FOISTATUS@fda.hhs.gov or 301-796-8118

Record processed under FOIA #2015-10057 7/7/16

Chapter 6 Method of Use

6.1 Preparation

6.1.1 Preparing the Necessary Equipment

(1) Prepare the accessories and forceps, etc. to be used.

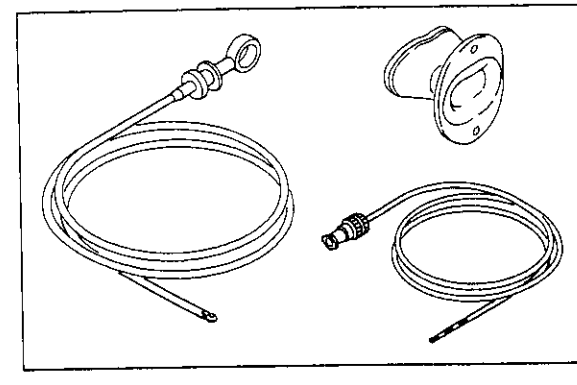

(2) Apply a liquid lens cleaner for Endoscopes to the surface of the lens at the distal end of the Endoscope.

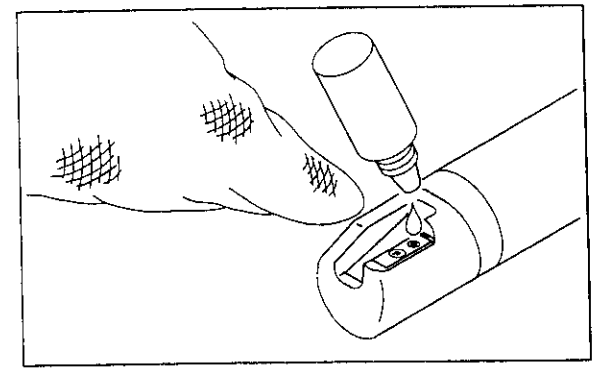

[Note]

Lens cleaner also has an anti-fogging effect.
A recommended product is SLC-1 from Sugiura Laboratory (furnished as standard).

6.1.2 Pretreatment of Patient

Use pretreatment that suits the purpose of examination.

Questions? Contact FDA/CDRH/OCE/DID at CDRH-FOISTATUS@fda.hhs.gov or 301-796-8118

Record processed under FOIA #2015-10057 7/7/16

6.2 Insertion and Observation

⚠ CAUTION

Energy of illumination may burn.
Do not allow the distal end to touch the same part for 5 minutes or more.

CAUTION

Direct application of Xylocaine spray will cause deterioration of the outer surface.
Do not directly apply Xylocaine spray to the insertion portion.
Do not use olive oil as a lubricant for insertion.

(1) Have the patient hold the mouthpiece in his/her mouth.

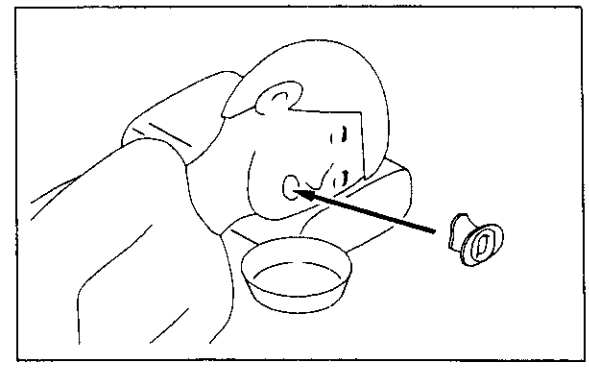

[Note]
If you choose to have the patient hold the mouthpiece after insertion, attach the mouthpiece to the insertion portion in advance. Have the patient hold it promptly after insertion.

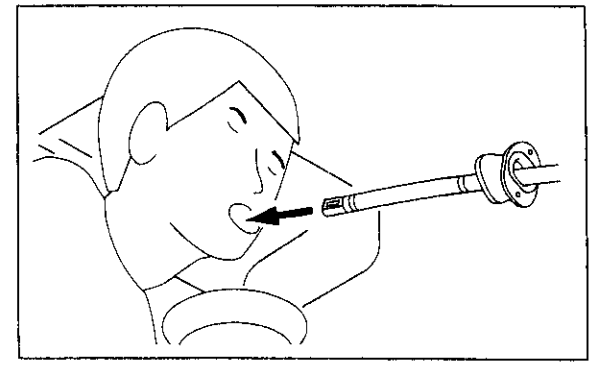

Questions? Contact FDA/CDRH/OCE/DID at CDRH-FOISTATUS@fda.hhs.gov or 301-796-8118

Record processed under FOIA #2015-10057 7/7/16

(2) Unlock the bending portion by turning the up-down locking lever and the left-right locking knob in the direction of F ► until they stop.

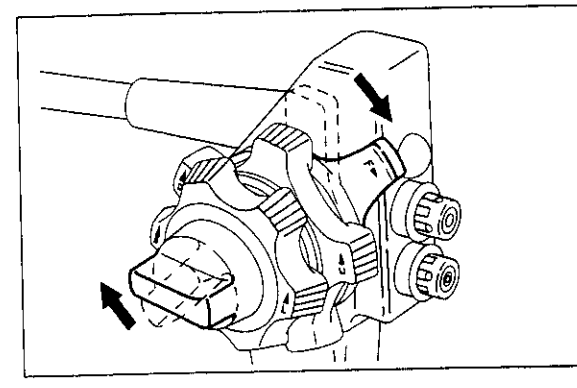

[Note]

Another procedure is also available: you can insert the Endoscope by locking the bending portion only in the left-right direction and unlocking it in the up-down direction.

(3) Switch on the power to the processor and turn on the lamp.

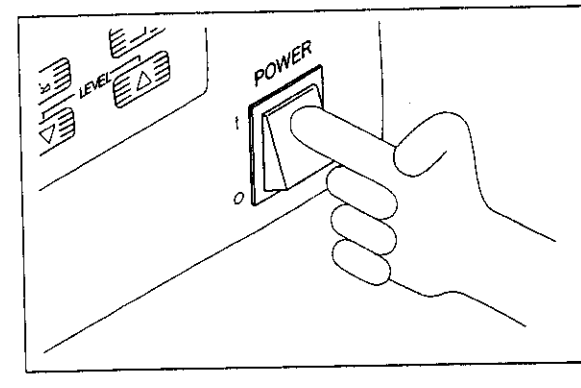

(4) Apply clean lubricant (Xylocaine jelly or the like) to the insertion portion as required.

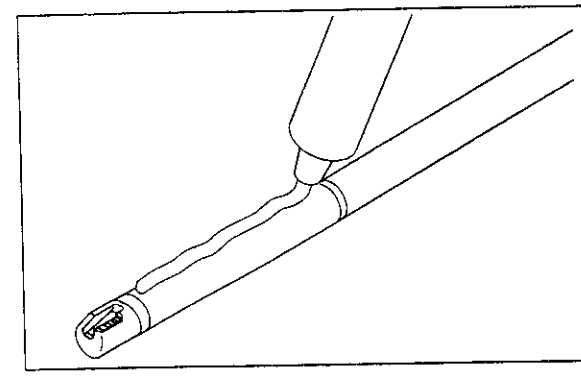

[Note]

Do not apply Xylocaine spray, olive oil or the like directly to the insertion portion.

(5) Insert the distal end of the Endoscope from the oral cavity to the pharynx, while observing the process.

Control the brightness by the level button on the processor.

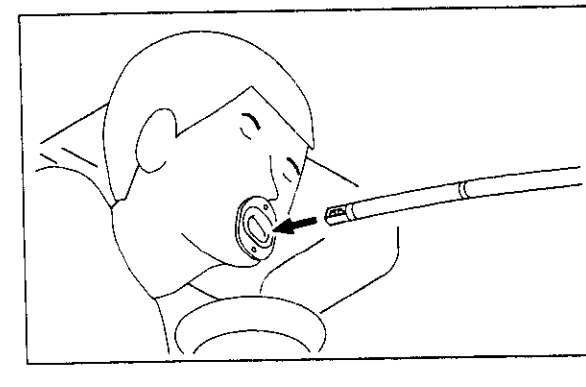

Questions? Contact FDA/CDRH/OCE/DID at CDRH-FOISTATUS@fda.hhs.gov or 301-796-8118

Record processed under FOIA #2015-10057 7/7/16

(6) Stop the center hole in the air/water button with a finger to supply air to the digestive tract.
The mucous membrane of the digestive tract will become clearly visible.

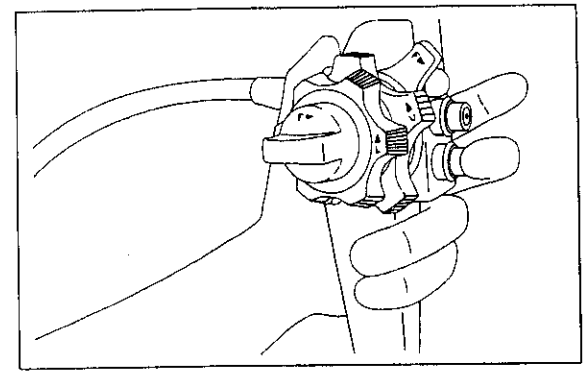

(7) Direct the distal end of the Endoscope to the region of interest by turning the up-down and left-right angle knobs.

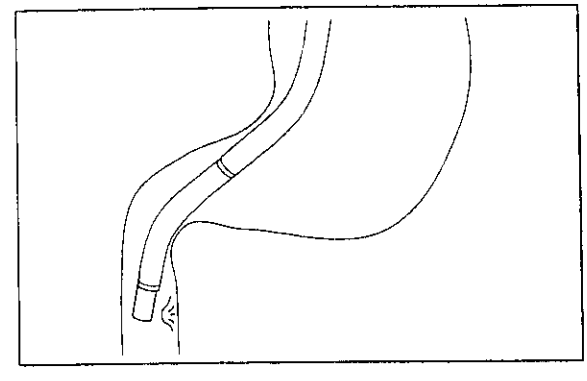

<To suction mucus>

To suction mucus, put the distal end of the Endoscope in the mucous lake and press the suction button.

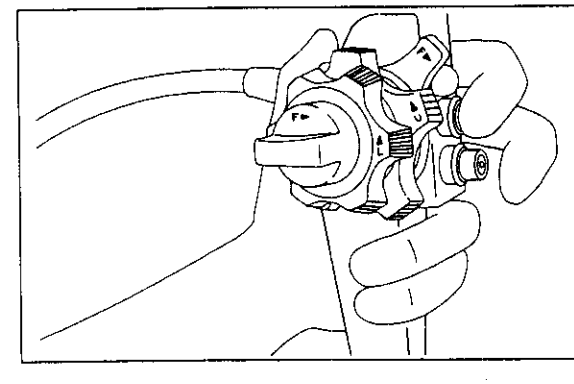

<If the surface of the lens is clouded with mucus
or if the image is obscured>

Wash the surface of the lens by pressing the water supply button. When washing is complete, remove the water from the surface of the lens by air blow and suction.

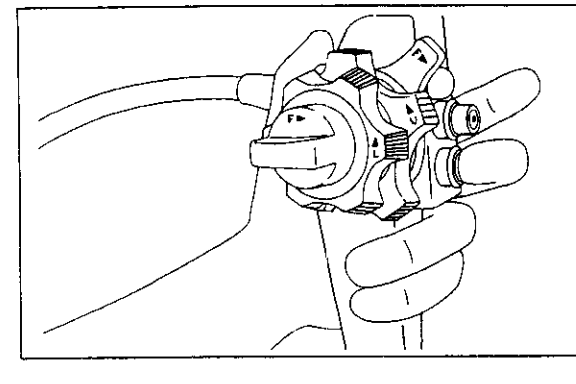

Questions? Contact FDA/CDRH/OCE/DID at CDRH-FOISTATUS@fda.hhs.gov or 301-796-8118

Record processed under FOIA #2015-10057 7/7/16

6.3 Biopsy

⚠ WARNING

Pressing forceps strongly against the digestive tract wall may cause holing or bleeding.
Do not press them the digestive tract wall with undue force.

CAUTION

Pushing forceps forcefully may damage Endoscope.
If you have difficulty inserting the forceps, do not push the forceps forcefully.

[Note] Sometimes the forceps become stuck in the bending portion and will not pass smoothly. In such case, unbend the bending portion a little and try to insert again.

(1) Direct the distal end of the Endoscope to the biopsy site.

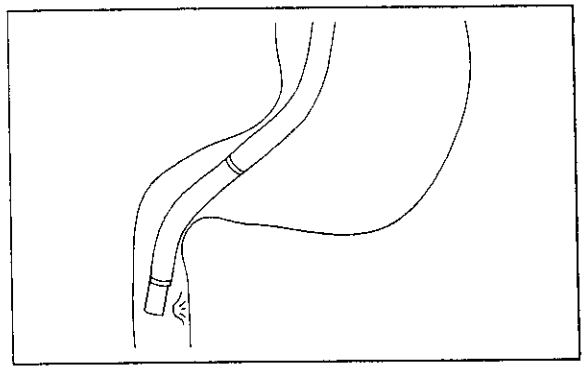

(2) Check the opening and closing of the forceps.

Insert the forceps from the forceps inlet by observing the image.

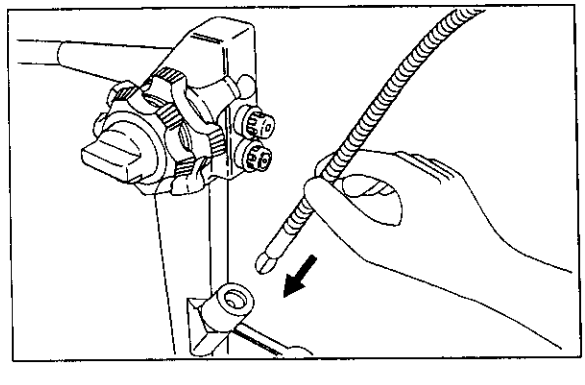

Questions? Contact FDA/CDRH/OCE/DID at CDRH-FOISTATUS@fda.hhs.gov or 301-796-8118

Record processed under FOIA #2015-10057 7/7/16

(3) When the distal end of the forceps come into the field of view, stop insertion temporarily.

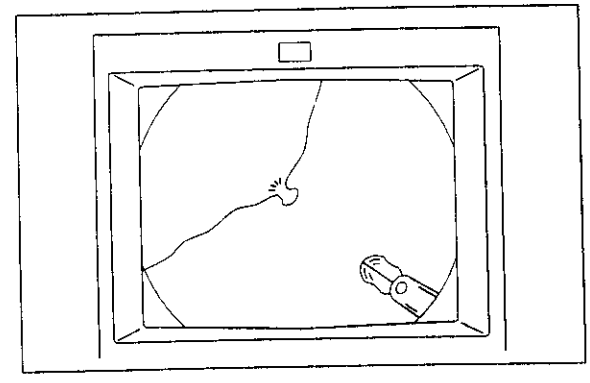

(4) Bring the forceps closer to the biopsy site slowly.

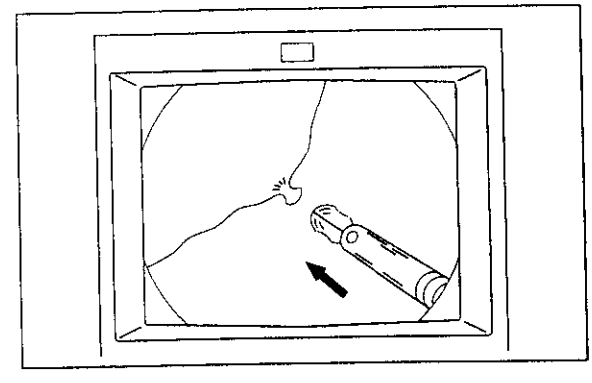

(5) Take a biopsy specimen by manipulating the angle knobs and letting the forceps in and out.

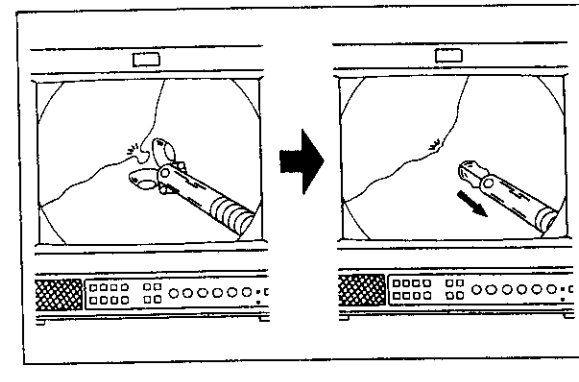

(6) Pull out the forceps slowly and take out the biopsy specimen.

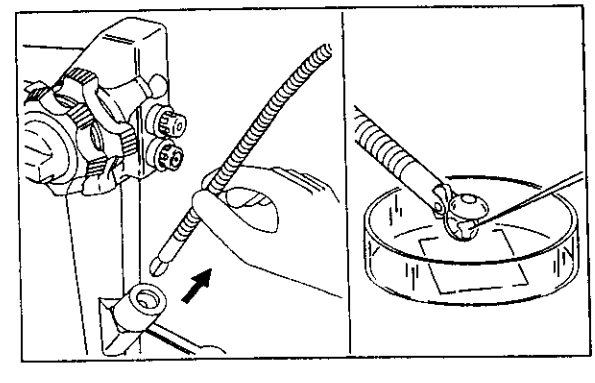

Questions? Contact FDA/CDRH/OCE/DID at CDRH-FOISTATUS@fda.hhs.gov or 301-796-8118

Record processed under FOIA #2015-10057 7/7/16

6.4 ERCP

⚠ WARNING

Pressing the cannulation tube strongly against the digestive tract wall may damage it.
Do not press it against digestive tract wall with undue force.

CAUTION

Sometimes, quick inserting of the cannulation tube may bend it.
Insert it little by little slowly.

(1) Manipulate to bend it so that the duodenal papilla aperture is placed at the center of the filed of view.

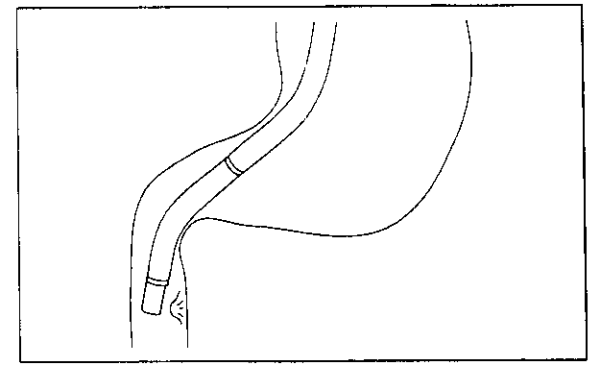

(2) Charge the contract media into a syringe and connect the cannulation tube to it. Check that the contract media comes out from the tip of the tube.

Keep the forceps elevator lever upright and insert the cannulation tube into the instrument channel inlet.

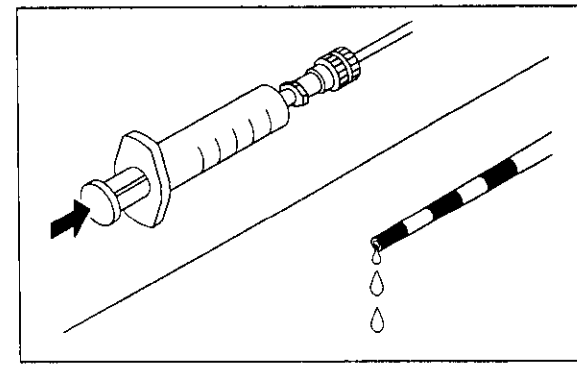

Questions? Contact FDA/CDRH/OCE/DID at CDRH-FOISTATUS@fda.hhs.gov or 301-796-8118

Record processed under FOIA #2015-10057 7/7/16

(3) When the cannulation tube touches against the forceps elevator and is unable to insert anymore, inset the cannulation tube by approximately 30mm by manipulating the forceps elevator lever to lay down the cannulation tube.

By manipulating the forceps elevator lever to erect the cannulation tube, the tip of the cannulation tube comes into the filed of view from the right lower of the screen.

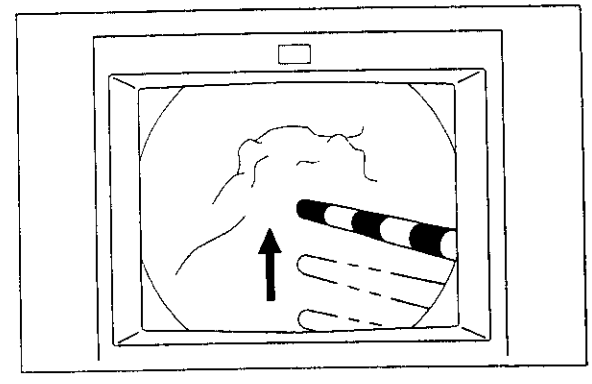

(4) Manipulate the angle knob, the forceps elevator lever and the moving in/out of the cannulation tube so that the tip of the cannulation tube directs to the papilla aperture, insert the cannulation tube into the common bile duct or the pancreatic duct through the papilla aperture.

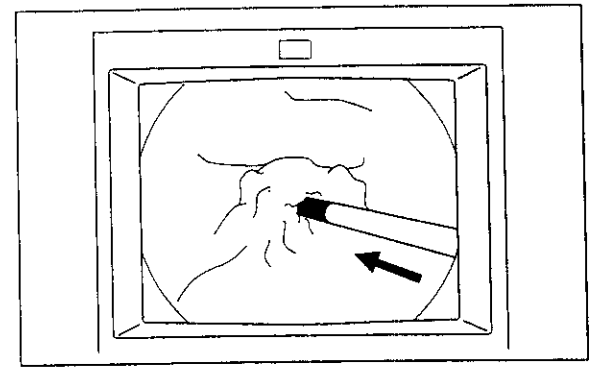

(5) Inject the contrast media in a syringe a little and check that the cannulation tube is inserted in the aimed common bile duct or pancreatic duct. Then, slowly inject the contract media into the common bile duct or the pancreatic duct.

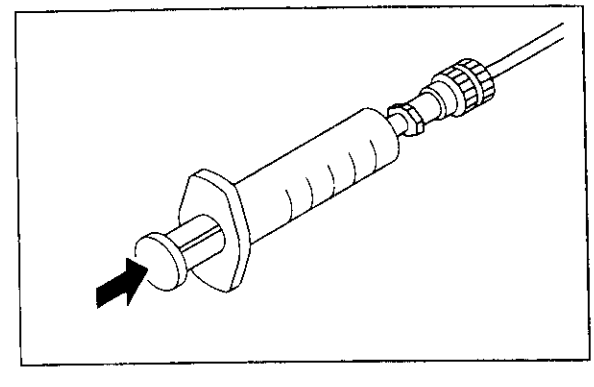

(6) Observe the conditions of the common bile duct or the pancreatic duct under X-rays illumination.

Questions? Contact FDA/CDRH/OCE/DID at CDRH-FOISTATUS@fda.hhs.gov or 301-796-8118

Record processed under FOIA #2015-10057 7/7/16

6.5 Pulling Out the Endoscope

(1) When the examination is over, draw any excessive air out of the body cavity.

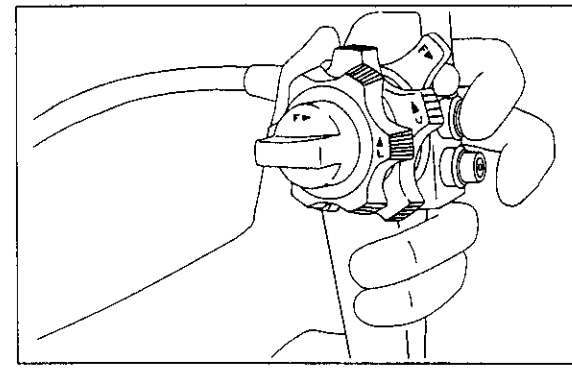

(2) Make the up-down locking lever and the left-right locking knob free.

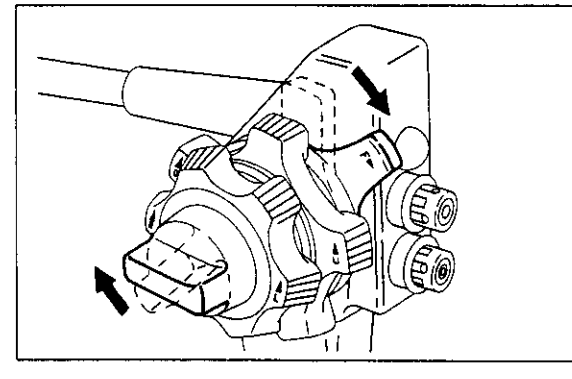

(3) Unbend the bending portion until it is almost straight by operating the angle knobs.

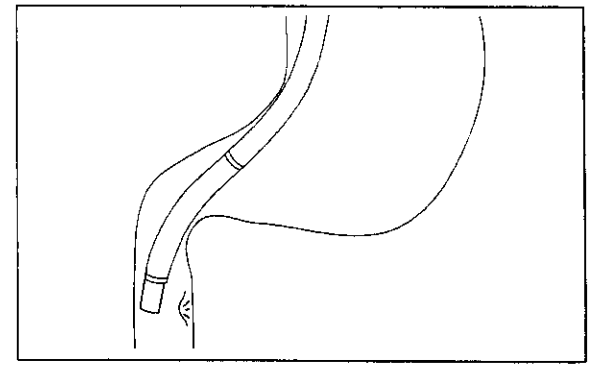

(4) Pull the Endoscope out slowly.

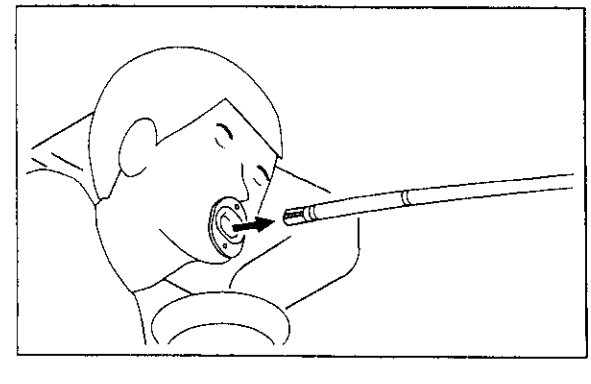

Questions? Contact FDA/CDRH/OCE/DID at CDRH-FOISTATUS@fda.hhs.gov or 301-796-8118

Record processed under FOIA #2015-10057 7/7/16

Chapter 7 Image Recording

This chapter explains image recording with taking photographs, a VCR or video printer.

7.1 Taking Photographs 7-2
7.2 Printing Using the Video Printer 7-3
7.2.1 The Video Printer 7-3
7.2.2 Input of the Screen Image 7-4
7.2.3 Input of Screen Image 7-4
7.2.4 Printout 7-5
7.3 Recording Using a Video Cassette Recorder 7-6

Questions? Contact FDA/CDRH/OCE/DID at CDRH-FOISTATUS@fda.hhs.gov or 301-796-8118

Record processed under FOIA #2015-10057 7/7/16

Chapter 7 Image Recording

7.1 Taking Photographs

(1) Turn the angle knobs until the part to be photographed enters the field of view.

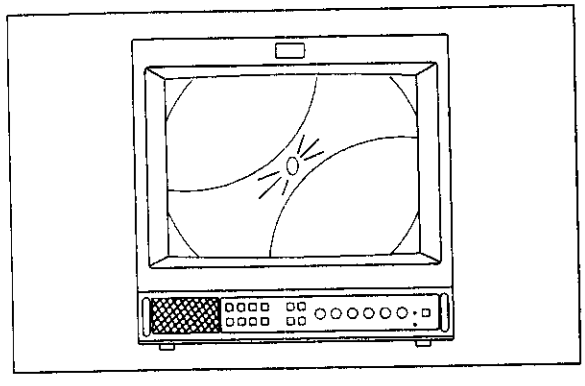

(2) When the part to be photographed enters the field of view, press the FR switch and freeze the image.

The still image will be maintained as long as the FR switch is being pressed.

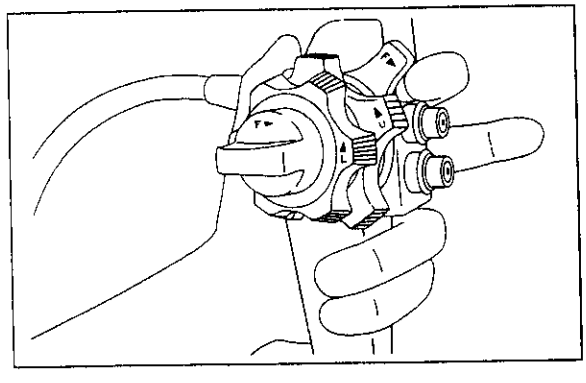

(3) Quickly judge if the still image is suitable for photographing.

If it is suitable for photographing, take the picture by pressing the FR switch once more while the image is still frozen.

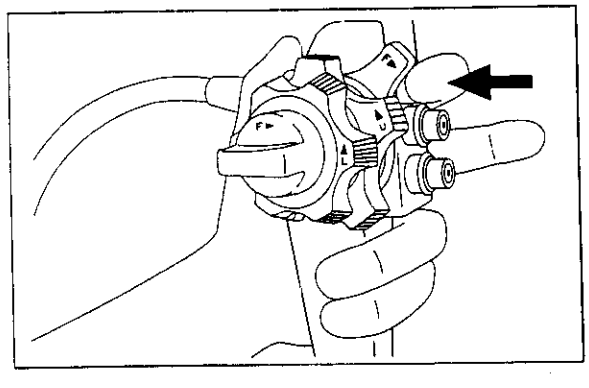

(4) If the image is not suitable for photographing, let go of the FR switch. Wait until the image freezing ends, and then start the procedure over again from step (1).

[Note]

For the details on preparations for photography and the settings for the hard copy unit, refer to the Operation Manual for the hard copy unit.

Questions? Contact FDA/CDRH/OCE/DID at CDRH-FOISTATUS@fda.hhs.gov or 301-796-8118

Record processed under FOIA #2015-10057 7/7/16

7.2 Printing Using the Video Printer

7.2.1 The Video Printer

The image observed on the monitor can be printed out on paper by connecting the video printer.

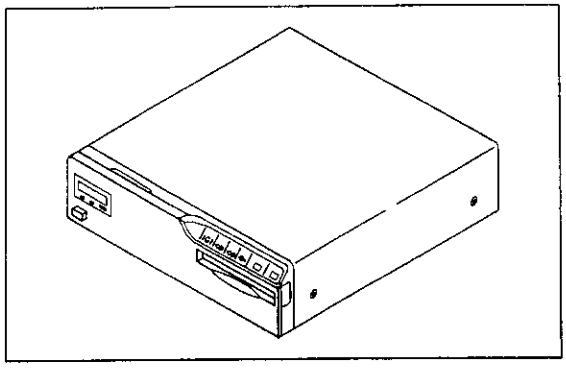

The UP-2800P(or UP-2900MD) Video Printer prints the monitor image onto A6 size paper. Multiple screen images (1, 2 or 4 screens) can be printed on a single sheet of printout paper.

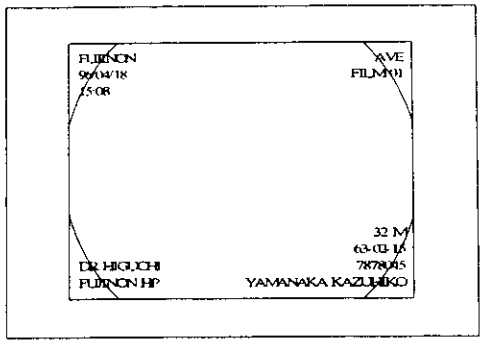

Full screen

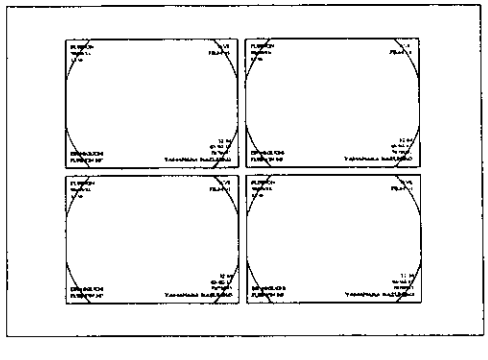

4 partitions

Questions? Contact FDA/CDRH/OCE/DID at CDRH-FOISTATUS@fda.hhs.gov or 301-796-8118

Record processed under FOIA #2015-10057 7/7/16

7.2.2 Input of the Screen Image

The method of inputting the screen image to the video printer depends on the specifications of the system you are using. The image is selected using the FR switch, the foot switch, or the remote controller for the printer.

The following explains the method for input of screen images using the FR switch on the Endoscope. Refer to the Operation Manual for the EPX-201 for the details of settings and connections.

7.2.3 Input of Screen Image

<Input using the FR switch on the Endoscope>

(1) Move the area you want to record into the field of view and freeze the screen image by pressing the FR switch.
The still image will be maintained while the FR switch is being pushed.

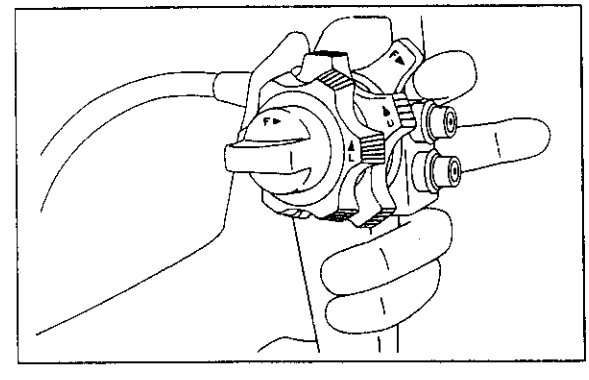

(2) The image will be input into the printer if you press the FR switch again while the image is still frozen.

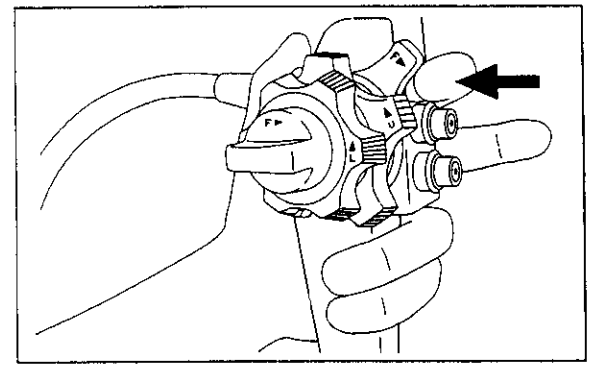

Questions? Contact FDA/CDRH/OCE/DID at CDRH-FOISTATUS@fda.hhs.gov or 301-796-8118

Record processed under FOIA #2015-10057 7/7/16

7.2.4 Printout

Printing operation of the video printer is selected using the main panel, the foot switch, or the remote controller.
In any case, printing is activated when the PRINT button is pressed.

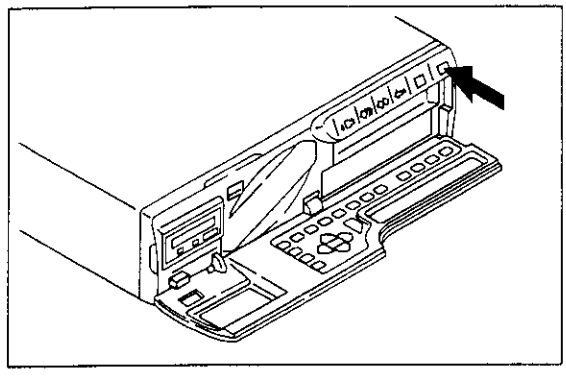

panel of the main unit

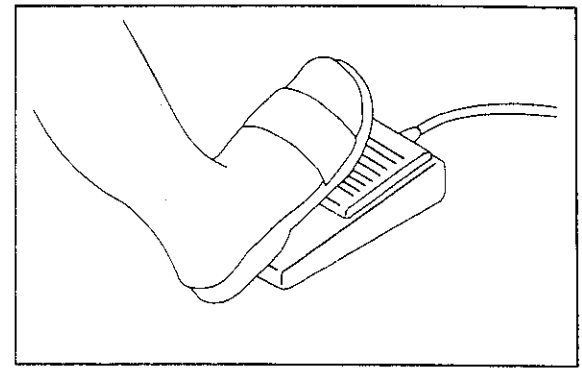

foot switch

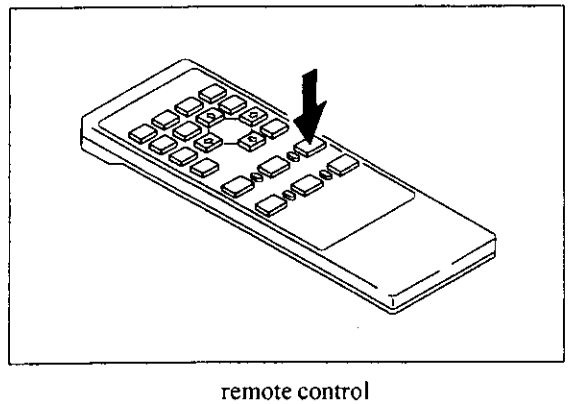

remote control

Questions? Contact FDA/CDRH/OCE/DID at CDRH-FOISTATUS@fda.hhs.gov or 301-796-8118

Record processed under FOIA #2015-10057 7/7/16

7.3 Recording Using a Video Cassette Recorder

The moving Endoscope screen image can be recorded if the SVO-9500MDP (SONY) video cassette recorder, which is called VCR hereinafter, is connected to the processor.
Refer to the Operation Manual for the processor for the method of connecting the VCR to the processor and for the image recording method.

(1) Insert a video tape into VCR.

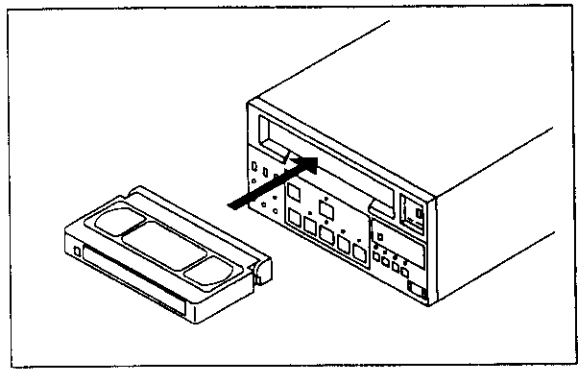

(2) To start recording, simultaneously push the REC and PLAY buttons on the VCR.
The PLAY button on the VTR will light up and the VCR will begin recording.

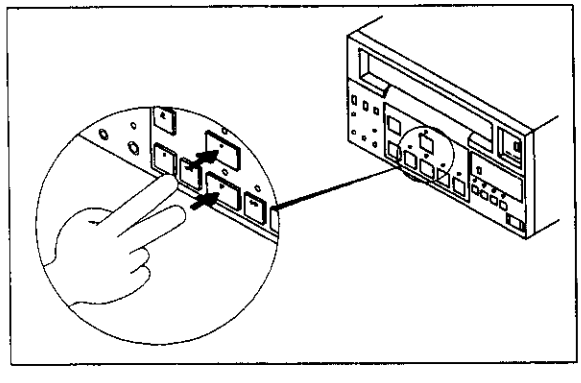

(3) To stop the recording, press the STOP button on the VCR.
The VCR will stops.

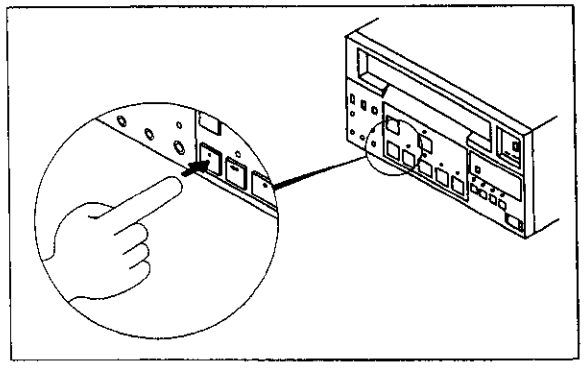

Questions? Contact FDA/CDRH/OCE/DID at CDRH-FOISTATUS@fda.hhs.gov or 301-796-8118

Record processed under FOIA #2015-10057 7/7/16

(4) Repeat Step (2) if you wish to begin recording again.

(5) When you have finished recording, push the EJECT button and remove the recorded cassette.

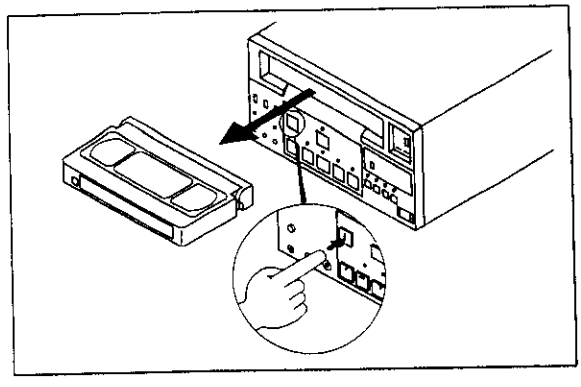

Questions? Contact FDA/CDRH/OCE/DID at CDRH-FOISTATUS@fda.hhs.gov or 301-796-8118

Record processed under FOIA #2015-10057 7/7/16

Questions? Contact FDA/CDRH/OCE/DID at CDRH-FOISTATUS@fda.hhs.gov or 301-796-8118

Record processed under FOIA #2015-10057 7/7/16

Appendix

Main Specifications Appendix-2
Trouble Shooting Appendix-5
Warranty and After-Sales Service Appendix-7
Index Appendix-8

Questions? Contact FDA/CDRH/OCE/DID at CDRH-FOISTATUS@fda.hhs.gov or 301-796-8118

Record processed under FOIA #2015-10057 7/7/16

Main Specifications

<Classification of Medical Electrical Equipment>

1. Type of protection against electric shock : Class I equipment (power supply: protective earth plug)
2. Degree of protection against electric shock : Type BF applied part
3. Degree of explosion protection : Use prohibited in flammable gas atmosphere

[Note] Use in combination with EPX-201

<Data about Main Unit>

Model	ED-250XL5	ED-250XT5
Optical system:		
Viewing direction	Side viewing (retro-viewing 15°)	Side viewing (retro-viewing 15°)
Field of view	100°	100°
Observation range (mm)	5 - 60	5 - 60
Method of illumination	Light guide method	Light guide method
Image size	Super image	Super image
Distal end diameter (mm)	ϕ12.5	ϕ13.5
Flexible portion diameter (mm)	ϕ10.8	ϕ12.6
Forceps channel diameter (mm)	ϕ3.2*	ϕ4.2*
Bending capability: Up/down	130° / 90°	130° / 90°
Left/right	90° / 110°	90° / 110°
Working length (mm)	1250	1250
Total length (mm)	1550	1550

* The compatibility of equipment chosen solely according to this forceps channel diameter is not guaranteed.

<Operating Environment and Storage Environment>

Temperature	10 - 40°C
Relative humidity	30 - 85%*
Atmospheric pressure	70 - 106 kPa

* Except when there is condensation

Questions? Contact FDA/CDRH/OCE/DID at CDRH-FOISTATUS@fda.hhs.gov or 301-796-8118

Record processed under FOIA #2015-10057 7/7/16

<Applicable Treatment Equipment>

Model	ED-250XL5	ED-250XT5
Biopsy forceps:		
Fenestrated	BF2418SF	
Fenestrated with needle	BF2418FN	
Basket retriever:		
Standard	K2418B	
	K2418BW	
Cannulation tube:		
Standard	T1720Z	
	T1720ZS	
Semi-tapered	T1720ZT	
Tapered	T1720ZC	
Indwelling	T1732Z	
	T2132Z	
Papillotomy knife	N2020C	
	N2020C20	
	N2020C40	
	N2020CT	
Diathermic snare:		
Half-moon	E2224M	
Hexagon	E2224H	
Cytology brush standard	H3518S	
Cleaning brush	WB3521FW2	WB4321FW2
Washing tube	T1720W	

Questions? Contact FDA/CDRH/OCE/DID at CDRH-FOISTATUS@fda.hhs.gov or 301-796-8118

Record processed under FOIA #2015-10057 7/7/16

<Image Size>

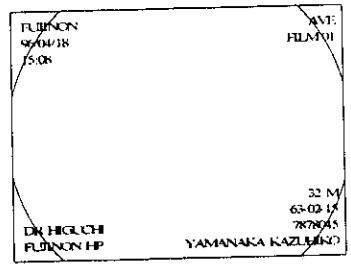

ED-250XL5
ED-250XT5

<Medical Device Directive>

This product complies with the requirements of
European Directive 93/42/EEC.
Classification : Class IIa

CE 0123

Questions? Contact FDA/CDRH/OCE/DID at CDRH-FOISTATUS@fda.hhs.gov or 301-796-8118

Record processed under FOIA #2015-10057 7/7/16

Troubleshooting

If the Endoscope should fail during use, follow these instructions to troubleshoot it.

Problem	Cause	Remedy
No images come out	1) The cart monitor processor is unplugged from the main outlet.	Plug the cart monitor processor into the main outlet.
	2) The card monitor processor is off.	Power on the cart monitor processor.
The image appears dark	1) The connection with the scope is incomplete.	Redo the scope connection. → 5.2 "Connecting the Endoscope" (p.5-3)
	2) The light intensity level is set around MIN.	Set the light intensity level around 0. → EPX-201 5.7 "Adjusting the Brightness" (p5-6)
	3) The photometry mode is set at PEAK	Set the photometry mode at AVE. → EPX-201 5.8 "Switching Lighting Modes" (p5-6)
The highlight portion of an image is too bright.	1) The light intensity level is set around MAX.	Set the light intensity level around 0. → EPX-201 5.7 "Adjusting the Brightness" (p5-6)
	2) The photometry mode is set at AVE.	Set the photometry mode at PEAK. → EPX-201 5.8 "Switching Lighting Modes" (p5-6)
Image output is suppressed during diagnosis	1) The scope connection is incomplete.	Redo the scope connection. → 5.2 "Connecting the Endoscope" (p.5-3)
	2) The video signal cable has burnt out.	Discontinue use immediately, power off the processor, straighten the bending portion and then release the control lever before pulling the bending portion out of position slowly. Submit the Endoscope to expert repairs.
Air and/or water cannot be fed	1) The pump is switched off.	Switch on the pump.
	2) The water tank cap is loose.	Close the cap firmly.
	3) The water tank is filled with too much water.	Reduce the water level in the water tank to about 80% of its capacity.
	4) The water tank is empty.	Fill the water tank with water.
	5) The water tank is not connected.	Connect the water tank.
Suction is disabled	1) The pump is switched off.	Switch on the pump.
	2) The pump is not connected.	Connect the pump.
	3) No forceps inlet is attached.	Attach a forceps inlet.
Low suction volume	1) The suction button has been damaged.	Replace with a new suction button.
	2) The forceps inlet has been degraded.	Replace with a new forceps inlet.
	3) The suction tube is not attached properly.	Reattach the suction tube.
	4) The forceps inlet is not attached properly.	Reattach the forceps inlet.

Questions? Contact FDA/CDRH/OCE/DID at CDRH-FOISTATUS@fda.hhs.gov or 301-796-8118

Record processed under FOIA #2015-10057 7/7/16

Problem	Cause	Remedy
The suction button won't reset	1) Foreign matter or blood adhering to the button is coagulated.	Disconnect the suction tube. After diagnosis, remove the button and clean or replace it.
	2) The suction button is damaged.	Replace with a new suction button.
	3) The suction button has stuck since it is underlubricated by silicon oil.	Give a coat of the supplied silicon oil to the button.
Treatment equipment cannot be inserted	1) The treatment equipment is left open (such as biopsy forceps).	Close the treatment equipment for insertion.
	2) The handle of the treatment equipment is held firmly (such as biopsy forceps).	Loosen the grip to insert the treatment equipment.
	3) The treatment equipment has difficulty being inserted due to bending.	Return the bending portion slightly and then insert it.
	4) Nonapplicable treatment equipment is used.	Use applicable treatment equipment.
The forceps won't pull out of position	1) The forceps are left open.	Close and pull out the forceps.
	2) The forceps are caught at the forceps channel.	Push in the forceps a little to return the bending portion by a slight margin before pulling it out of position.
Images appear garbled	1) Diathermic interferences	Stop power supply to the diathermic treatment equipment to restore image output. The Endoscope is working all right.
	2) Not connected correctly	Connect properly.
The bending portion won't reset	1) The angle is locked.	Use the angle lock knob to unlock the angle.
	2) The bending control facility is malfunctioning.	Discontinue use immediately, and contact your dealer or the nearest service center without forcing the bending portion out of position. Forcing the bending portion out of position could result in body cavity damage.
Images cannot be captured in the image recorder	1) The image recorder is not connected.	Connect the image recorder.
	2) Not connected correctly.	Reconnect the image recorder to ensure correct connection.

 Questions? Contact FDA/CDRH/OCE/DID at CDRH-FOISTATUS@fda.hhs.gov or 301-796-8118

Record processed under FOIA #2015-10057 7/7/16

Warranty and After-Sales Service

<Certificate of Conformance>

This product is supplied with a certificate of conformance

<After-Sales Service>

1) If the equipment does not work properly, check it first reading this manual.

2) If the equipment is still not working well, ask for professional help.

   Consult your local dealer or FUJINON representative.

3) Repairs during the warranty period

   We will repair your equipment free of charge according to the provisions of the warranty. The warranty period is one year after date of purchase. (Six months for forceps.) Note that the warranty is void in the following cases:

   a. Damage caused by fire or natural disaster such as storms or floods.
   b. Troubles caused by careless handling or misuse of the product on the part of the user.
   c. Troubles caused by repair or modification by an unauthorized person.

4) Repairs after the warranty period

   We will make a paid repair at your request if the equipment is found possible to restore the normal function by repair. When contacting our service representative, provide the following information.

   Model name :
   Serial number :
   Description of failure : as detailed as possible
   Date of purchase :

Questions? Contact FDA/CDRH/OCE/DID at CDRH-FOISTATUS@fda.hhs.gov or 301-796-8118

Record processed under FOIA #2015-10057 7/7/16

Index

<Numricals>
135 Camera 2-5

<A>
Aeration 10-5
Air/water button 4-4

<B>
Bending mechanism 4-2
Bending portion 3-3

<C>
Cart 2-4
Caution 2, 6, 1-2
Chemical disinfection 9-2
Clinical procedures 3
Control portion 3-2

<D>
Detergente enzimatico liquido 8-3
Distal end 3-3
DK-201 2-5

<E>
Electrosurgical instruments 12-2
EOG 10-3, 10-4
EPX-201 2-4
ERCP 6-8
Ethylene oxide gas 10-3, 10-4
EVE connector 3-3

<F>
Feed water connector 3-3
FH-15W 2-5
Flexible portion 3-3
Forceps elevator 4-6, 6-8, 6-9
Forceps inlet 4-4
Forceps valve 2-2
Freeze 4-5
FR switch 4-5

<G>
Gas sterilization 10-2

<H>
Hard copy 2-5

<I>
Image recording 7-2
Insertion portion 3-3

<L>
Left-right angle knob 4-3
Left-right locking knob 4-3
LG connector 3-3
LG flexible portion 3-2
Lock 4-2, 4-3

<M>
Maintenance 1-2
Monitor 2-5
Mouthpiece 2-2, 6-3

<N>
Neatral detergent 8-3

<O>
Operating environment Appendix-2

<P>
Preparations 5-2
Protective earth receptacle 5-2
PVM-1453MD/1353MD 2-5

<S>
Safety 1-2
S terminal 3-3
Storage 11-2
Storage environment Appendix-2
Suction button 4-4
Suction connector 3-3
SVO-9500MD/MDP 2-5

Questions? Contact FDA/CDRH/OCE/DID at CDRH-FOISTATUS@fda.hhs.gov or 301-796-8118

Record processed under FOIA #2015-10057 7/7/16

<U>

Unlock 4-2, 4-3
UP-5600MDP/MD 2-5
Up-down angle knob 4-2
Up-down locking lever 4-2

<V>

Ventilation adaptor 3-3, 10-5
Ventilation connector 3-3

<W>

Warning 2, 6, 1-2
Washing 8-2
Water tank 5-3

Questions? Contact FDA/CDRH/OCE/DID at CDRH-FOISTATUS@fda.hhs.gov or 301-796-8118

Record processed under FOIA #2015-10057 7/7/16

FUJINON

manufacturer
FUJI PHOTO OPTICAL CO., LTD.
1-324 UETAKE-CHO,KITA-KU,SAITAMA-SHI
SAITAMA 331-9624, JAPAN
TEL : 81-48-668-2153 FAX : 81-48-668-1570

represented in the North America by
FUJINON INC.
10 HIGH POINT DRIVE, WAYNE, NJ 07470, U.S.A.
TEL : 1-973-633-5600 FAX : 1-973-633-8818

represented in the EU, Middle East and Africa by
FUJINON (EUROPE) GmbH
HALSKESTRASSE 4, 47877 WILLICH, GERMANY
TEL : 49-2154-924-0 FAX : 49-2154-924-290

represented in the South East Asia by
FUJI KOKI SINGAPORE PTE. LTD.
BLK 211 HENDERSON ROAD, #10-04 HENDERSON
INDUSTRIAL PARK, SINGAPORE, 159552
TEL : 65-6276-4988 FAX : 65-6276-6911

represented in the Oceania by
F.P. FOCUSING PTY. LTD.
UNIT-18, 52 HOLKER STREET, SILVERWATER
N.S.W. 2128, AUSTRALIA
TEL : 61-2-9748-2744 FAX : 61-2-9748-2428

Questions? Contact FDA/CDRH/OCE/DID at CDRH-FOISTATUS@fda.hhs.gov or 301-796-8118

FUJINON

Electronic Video Endoscopes

EVE400/200 System
Group 5
Group 8

OPERATION MANUAL

(Cleaning, Disinfection and Storage)

Thank you for purchasing our product. Read this manual carefully before use to avoid unexpected accidents, and take full advantage of the product's capabilities.

Questions? Contact FDA/CDRH/OCE/DID at CDRH-FOISTATUS@fda.hhs.gov or 301-796-8118

Record processed under FOIA #2015-10057 7/7/16

Important Safety Information

1. Safety

Read and understand this manual carefully before use. Use the Endoscope following the provided instructions. The items important for the safe use of the Endoscope are summarized in Chapter 1 "Safety" in the preparations and operations section.
Safety precautions associated with individual operations or procedures are provided separately marked "⚠ WARNING" or "⚠ CAUTION."

2. Warning

The items that must be observed for safety when performing endoscopy or electrosurgery are identified by "⚠ WARNING" or "⚠ CAUTION." Read and understand the warning information carefully, and perform the procedures correctly.

⚠ WARNING

Improper use or operation of the equipment may injure patients, physicians, or people in the vicinity.

Read and understand this manual carefully before operating the equipment.

Improper operations that will damage the equipment only are identified by "CAUTION."

3. When Using the Endoscope for the First Time

Endoscopes have not been sterilized. When using this product for the first time, use the level of disinfection or sterilization suitable to the application according to Chapter 8 "Washing," Chapter 9 "Chemical Disinfection," or Chapter 10 "Gas Sterilization."

Questions? Contact FDA/CDRH/OCE/DID at CDRH-FOISTATUS@fda.hhs.gov or 301-796-8118

Record processed under FOIA #2015-10057 7/7/16

Contents

Important Safety Information 2

Preface 4

Conventions Used in This Manual 4

Chapter 8 Washing 8-1
- 8.1 Methods of Washing 8-2
- 8.2 Conditions of Washing 8-3
- 8.3 Necessary Equipment and Materials 8-4
- 8.4 First Washing 8-6
- 8.5 Second Washing 8-8
- 8.6 Washing and Sterilize Biopsy Forceps 8-20
- 8.7 Washing and Sterilize Cannulation Tube 8-21
- 8.8 Washing, Disinfecting and Sterilize Mouthpiece 8-22
- 8.9 Washing, Disinfecting and Sterilize Air/Water Button and Suction Button 8-23
- 8.10 Washing, Disinfecting and Sterilize J Piping, Distal End Hood and Forceps Valve 8-24
- 8.11 Washing and Disinfecting Distal End Cap and Cap Check Ring 8-25
- 8.12 Washing and Disinfecting Cleaning Brush 8-26

Chapter 9 Chemical Disinfection 9-1
- 9.1 Methods of Chemical Disinfection 9-2
- 9.2 Conditions of Disinfection 9-3
- 9.3 Chemical Disinfection of Endoscope 9-4
- 9.4 Rinsing of Endoscope 9-6

Chapter 10 Gas Sterilization 10-1
- 10.1 Conditions of Gas Sterilization 10-2
- 10.2 EOG (Ethylene Oxide Gas) Sterilization 10-4

Chapter 11 Storage 11-1

Index Index-1

Questions? Contact FDA/CDRH/OCE/DID at CDRH-FOISTATUS@fda.hhs.gov or 301-796-8118

Record processed under FOIA #2015-10057 7/7/16

Preface

This manual describes how to wash, disinfect, sterilize and store EVE400 System Endoscopes, EVE200 System Endoscopes Group 5, Group 8.

Conventions Used in This Manual

This manual uses the following conventions to make it easy to understand the operations described in it.

■ General conventions

Convention	Meaning
⚠	Indicates a potential danger that may harm to people.
⚠WARNING	Explains the dangerous conditions that may cause to death or serious accident unless it is avoided.
⚠CAUTION	Explains the conditions that may cause to light or medium injury unless it is avoided.
CAUTION	Explains the conditions that may damage to equipment unless it is avoided.
(1), (2), (3), ···	Consecutive numbers in operating procedures indicate the sequence of successive operations.
[Note]	Indicates a comment or supplementary information.
➡	Indicates a reference.

Questions? Contact FDA/CDRH/OCE/DID at CDRH-FOISTATUS@fda.hhs.gov or 301-796-8118

Record processed under FOIA #2015-10057 7/7/16

Chapter 8 Washing

This chapter describes methods of washing. Carry out first washing at the bedside immediately after pulling out the Endoscope. Then carry out second washing carefully in a sink.

8.1 Methods of Washing 8-2
8.2 Conditions of Washing 8-3
8.3 Necessary Equipment and Materials 8-4
8.4 First Washing 8-6
8.4.1 Wiping 8-6
8.4.2 Washing Air/Water Supply Channel 8-6
8.4.3 Washing Suction Channel 8-7
8.4.4 Washing the Forceps Elevator 8-7
8.5 Second Washing 8-8
8.5.1 Removing Endoscope from the Processor 8-8
8.5.2 Water Proofing the EVE Connector 8-9
8.5.3 Air Tightness Test 8-10
8.5.4 Remove the Air/Water Button, Suction Button and Forceps Valve 8-11
8.5.5 Brushing the Suction Channel 8-12
8.5.6 Brushing the Air/Water Supply Channel 8-12
8.5.7 Brushing the Distal End 8-13
8.5.8 Connecting Cleaning Adapter 8-14
8.5.9 Removing Debris in the Air/Water Nozzle 8-15
8.5.10 Washing the Air/Water Supply and Suction Channel 8-16
8.5.11 Washing the Water Jet Channel 8-17
8.5.12 Washing the Entire Endoscope 8-19
8.6 Washing and Sterilize Biopsy Forceps 8-20
8.7 Washing and Sterilize Cannulation Tube 8-21
8.8 Washing, Disinfecting and Sterilize Mouthpiece 8-22
8.9 Washing, Disinfecting and Sterilize Air/Water Button and Suction Button 8-23
8.10 Washing, Disinfecting and Sterilize J Piping, Distal End Hood and Forceps Valve 8-24
8.11 Washing and Disinfecting Distal End Cap and Cap Check Ring 8-25
8.12 Washing and Disinfecting Cleaning Brush 8-26

Questions? Contact FDA/CDRH/OCE/DID at CDRH-FOISTATUS@fda.hhs.gov or 301-796-8118

Record processed under FOIA #2015-10057 7/7/16

Chapter 8 Washing

8.1 Methods of Washing

CAUTION

Improper cleaning may cause damage to Endoscope.
Proceed the cleaning of Endoscope by the specified method.

Carry out first washing at bedside immediately after pulling out Endoscope. Then carry out second washing carefully in sink.

Use tap water or cleaning fluids for washing. Regarding cleaning fluids, we recommend you to use chemicals listed in Table 8.2.

Table 8.1 Applicable methods of washing for Endoscope and accessories

	Chemical cleaning	Ultrasonic cleaning
Endoscope	○	○*
Air/Water button	○	○*
Suction button	○	○*
Biopsy forceps	○	○
Water tank	○	○
Mouthpiece	○	○
Distal end cap	○	○
Cleaning brush	○	○
J piping	○	○
Forceps valve	○	○
Carrying case	×	×
Protective cap	○	○
Cleaning adapter	○	×
Distal end hood	○	○
Cap check ring	○	○

* : Use an ultrasonic cleaning unit specialized for Endoscope.

Questions? Contact FDA/CDRH/OCE/DID at CDRH-FOISTATUS@fda.hhs.gov or 301-796-8118

Record processed under FOIA #2015-10057 7/7/16

8.2 Conditions of Washing

Regarding chemicals for use in washing, we recommend that you use chemicals listed in Table 8.2. We have confirmed that Endoscopes, biopsy forceps, snares, and the like have resistance to these chemicals.

If you want to use cleaning fluids other than those listed here, inquire of us about the resistance of Endoscopes, biopsy forceps, snares, or the like to them beforehand.

In relation to resistance of equipment, use washing conditions not severer than those specified in table below.

For effects, dilution, and preparation of chemicals under working conditions shown in table below, refer to manufacturers of respective chemicals. Besides, some chemicals require "precautions in use" or "handling precautions," such as wearing of gloves, to be observed. Refer also to instruction manuals of respective chemicals.

Table 8.2 Chemicals used for washing and conditions

Chemicals	Manufacturer	Trade name	Dilution ratio
Neutral detergent			Observe instructions for respective detergent.
Detergente enzimatico liquido	Ruhof Corporation	Endozime AW	Dilute 8ml with 1000 ml of cold or warm water
	Laboratrios inibsa	Instrunet EZ	Dilute 120x with warm water

Questions? Contact FDA/CDRH/OCE/DID at CDRH-FOISTATUS@fda.hhs.gov or 301-796-8118

Record processed under FOIA #2015-10057 7/7/16

8.3 Necessary Equipment and Materials

Prepare the necessary equipments used in chapter chapter 8 and 9.

- Cleaning adapter CA-500
  : Components → Tube for air/water supply channel
  Tube for suction channel
  Syringe
  Valve adapter CA-500S/A
  Forceps inlet cleaning adapter CA-500B/C (with a cap)
  Tank receiving cap CA-500W/T
- Insertion adapter WA-500 (Group 8 only)
- J washing adapter CJ-500 (for Endoscopes that have these mechanisms only)
- Cleaning adapter CA-500N (for nozzle)
- Cleaning brush*
  Group 8 : Three kinds (thin brush, thick brush, brush for valve WB11001FW2)
  Group 5 : One kind
- Air tightness tester LT-7
- Chemical solution/cleaning fluid
- Container for chemical solution/cleaning fluid
- Sterilize gauze
- Toothbrush (soft type)
- Protective gear
  Rubber gloves
  Goggle
  Facemask
  Protection clothes

* Prepare spare consumable items such as cleaning brushes since they may be damaged.

Questions? Contact FDA/CDRH/OCE/DID at CDRH-FOISTATUS@fda.hhs.gov or 301-796-8118

Record processed under FOIA #2015-10057 7/7/16

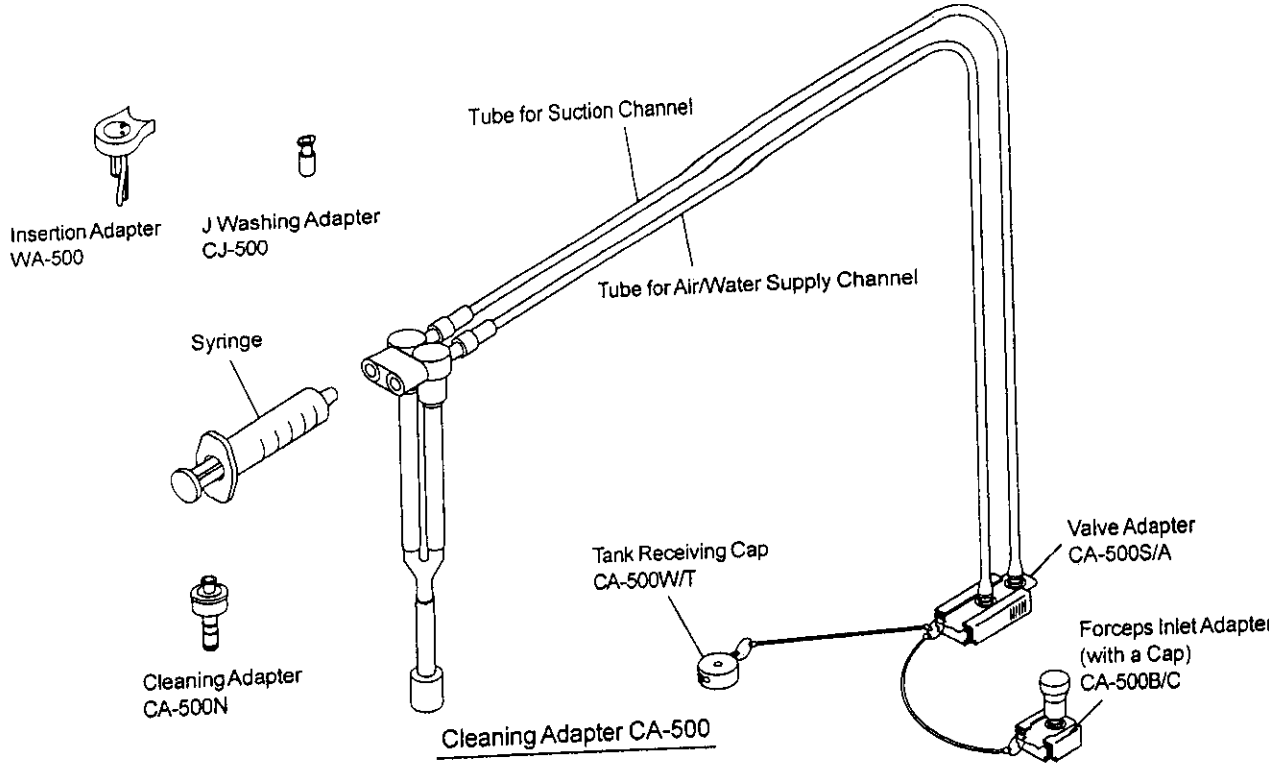

Cleaning Adapter CA-500

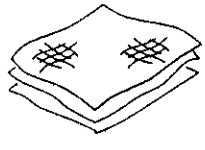

Sterilize Gauze

Toothbrush (soft type)

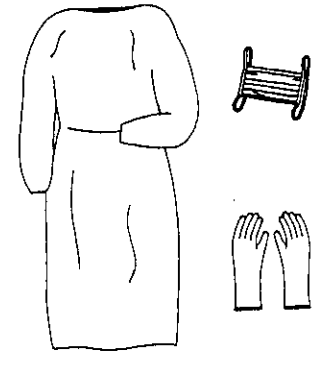

Protective Gear

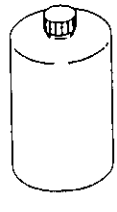

Chemical solution/Cleaning fluid

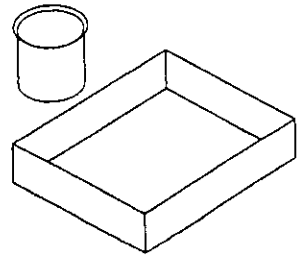

Container for chemical solution/
Cleaning fluid

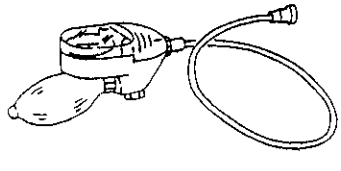

Air Tightness Tester
LT-7

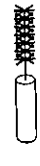

Cleaning Brush
(for Valve)
WB11001FW2

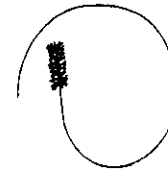

Cleaning Brush

Questions? Contact FDA/CDRH/OCE/DID at CDRH-FOISTATUS@fda.hhs.gov or 301-796-8118

Record processed under FOIA #2015-10057 7/7/16

8.4 First Washing (performed at bedside immediately after use of Endoscope)

8.4.1 Wiping

Wipe contamination off the outside of insertion portion of Endoscope with gauze or paper towel.

You can also use gauze dampened with ethanol as required.

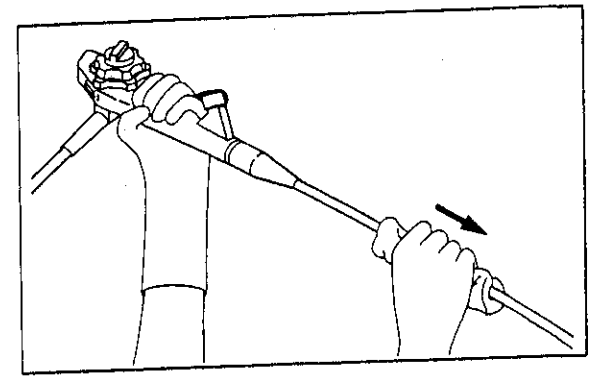

8.4.2 Washing Air/Water Supply Channel

You are going to remove mucus and blood from air/water supply channel and nozzle.

(1) Feed air for 10 seconds by closing air/water button with a finger.

(2) Feed water for 10 seconds by depressing air/water button.

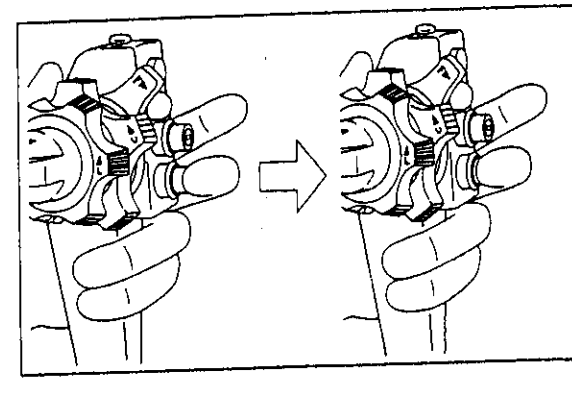

(3) Remove connector from water tank, and close connector of Endoscope with a finger.

(4) Continue pressing air/water button until the channel is completely drained.

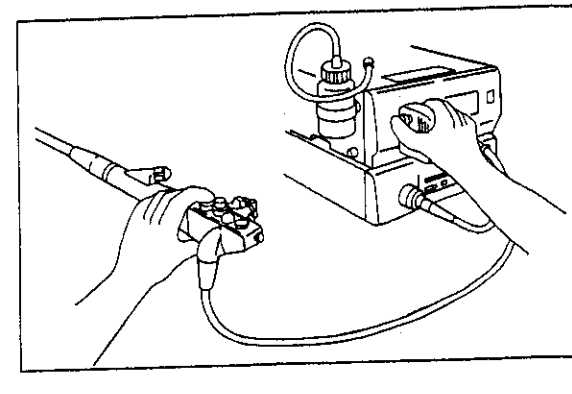

Questions? Contact FDA/CDRH/OCE/DID at CDRH-FOISTATUS@fda.hhs.gov or 301-796-8118

Record processed under FOIA #2015-10057 7/7/16

8.4.3 Washing Suction Channel

You are going to wash suction channel.

(1) Put distal end of Endoscope in cleaning fluid, and depress suction button to suck in cleaning fluid for 10 seconds.

(2) Keeping suction button depressed, pull distal end of Endoscope out of cleaning fluid and suck in air.

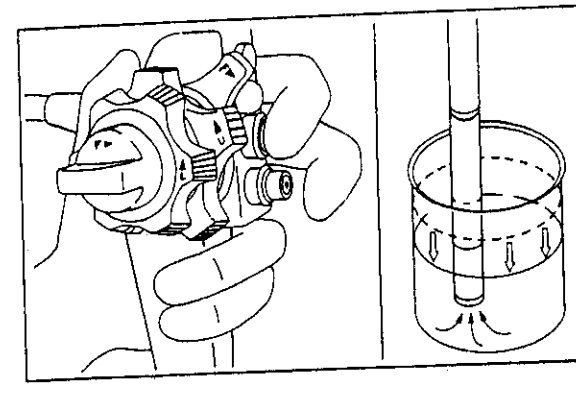

(3) Repeat steps (1) and (2) above 2 or 3 times to suck in cleaning fluid and air alternately.

(4) Finally, pull distal end of Endoscope out of cleaning fluid and suck in air until cleaning fluid is completely drained from suction channel.

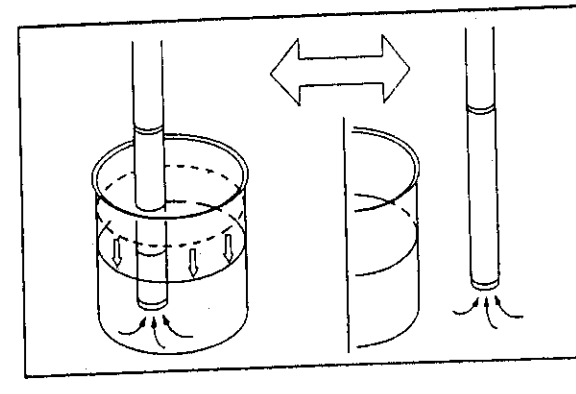

8.4.4 Washing the Forceps Elevator (for Endoscopes with duodenoscope or forceps elevator mechanism only)

The following is the procedure for washing the forceps elevator.

Put the distal end of the Endoscope in cleaning fluid and move the forceps elevator lever several times.

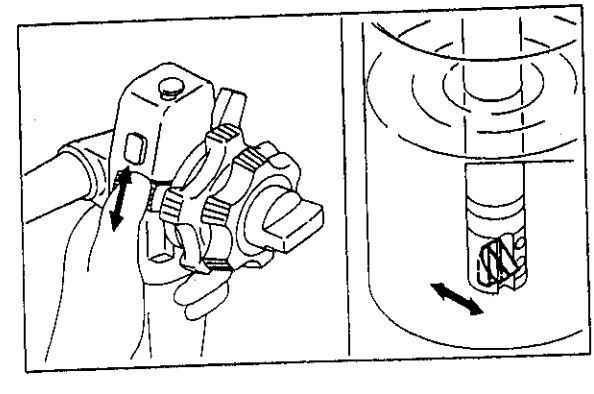

Questions? Contact FDA/CDRH/OCE/DID at CDRH-FOISTATUS@fda.hhs.gov or 301-796-8118

Record processed under FOIA #2015-10057 7/7/16

8.5 Second Washing (washing in sink)

After the first washing at bedside, carry out a second washing carefully in the sink. Run an air tightness test on the Endoscope before washing.

⚠ WARNING

The Endoscope could be a source of infection.
In case the cleaning brush is damaged during a washing process, remove any residue from inside the tube.

In case the cleaning brush is damaged, insert a spare brush to remove the residue by pushing it out of the tube.
If a damaged brush is left in the tube, the residue might fall out during use and injure the patient's body cavity.

⚠ CAUTION

Touching the LG connector with hands immediately after use of the Endoscope may cause to burn.
Do not touch the LG connector tip until it will be cooled down (5 minutes).

8.5.1 Removing Endoscope from the Processor

(1) Turn OFF the power switch of the processor and the light source.

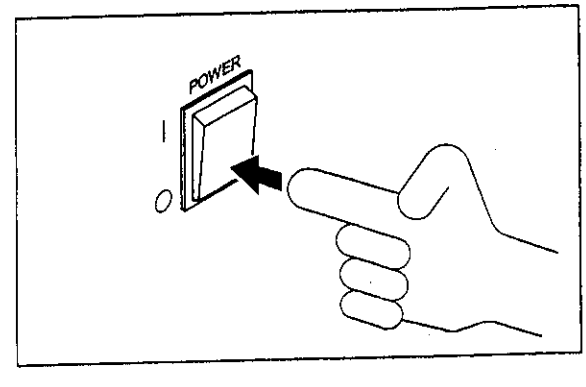

(2) Remove the suction tube and water tank from the LG connector of the Endoscope.

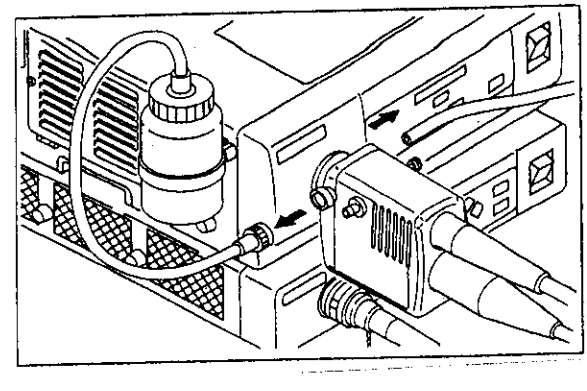

Questions? Contact FDA/CDRH/OCE/DID at CDRH-FOISTATUS@fda.hhs.gov or 301-796-8118

Record processed under FOIA #2015-10057 7/7/16

(3) Remove the EVE connector from the processor.

(4) Remove the LG connector from the light source.

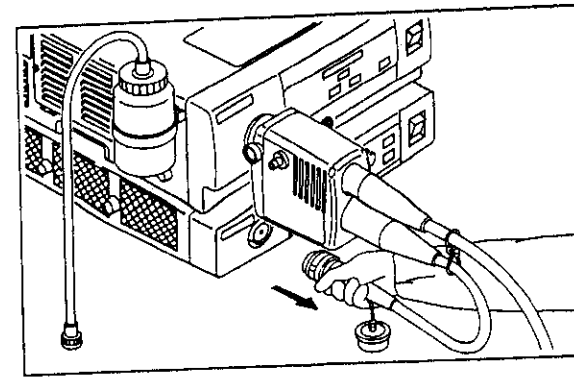

8.5.2 Water Proofing the EVE Connector

If the EVE connector with water on the electrical contacts is used, it will cause a malfunction. Before washing, attach the water proof cap to the EVE connector so that water do not reach the contacts.

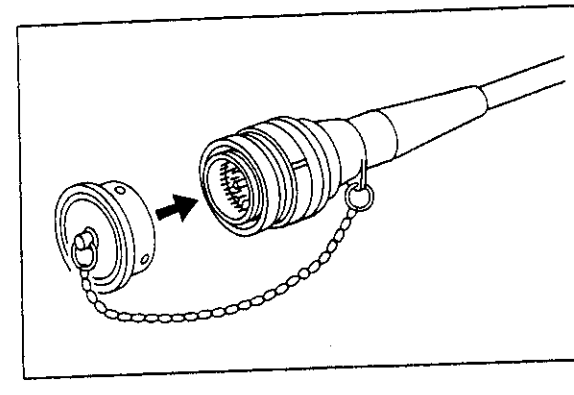

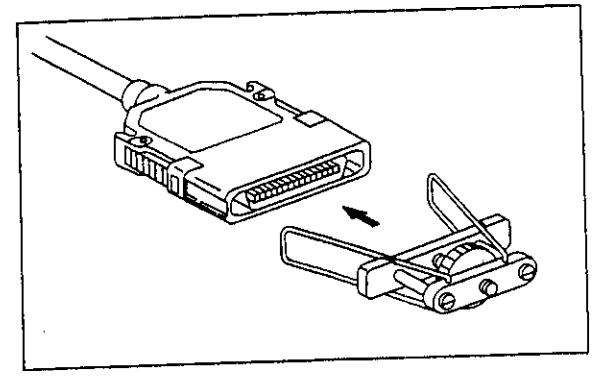

Questions? Contact FDA/CDRH/OCE/DID at CDRH-FOISTATUS@fda.hhs.gov or 301-796-8118

Record processed under FOIA #2015-10057 7/7/16

8.5.3 Air Tightness Test

CAUTION

It may cause damage to Endoscope.
Do not immerse it into water or chemical solution.

(1) Connect air tightness tester LT-7 to ventilation connector of Endoscope.

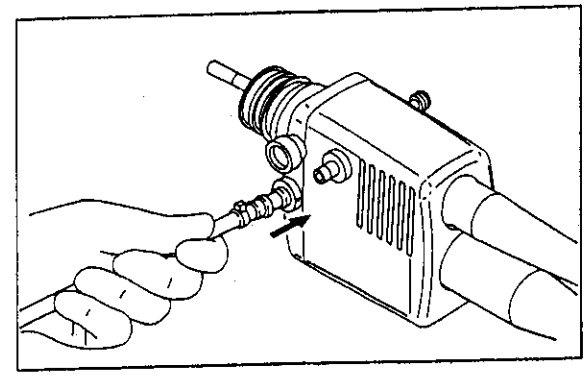

(2) Close the valve of air tightness tester.

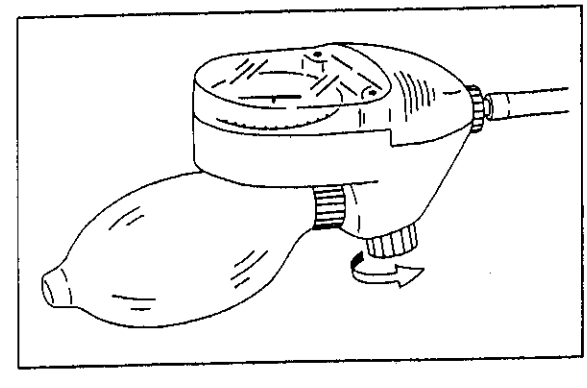

(3) Feed air until air tightness tester indicates 20 kPa.

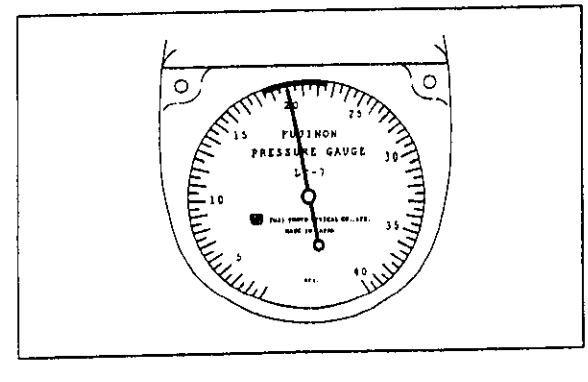

Questions? Contact FDA/CDRH/OCE/DID at CDRH-FOISTATUS@fda.hhs.gov or 301-796-8118

Record processed under FOIA #2015-10057 7/7/16

(4) Allow tester to stand for 30 seconds and check indication again.
If the change in the indication remains with in 2 gradations, the Endoscope has passed the test.
Remove air tightness tester and carry out second washing.

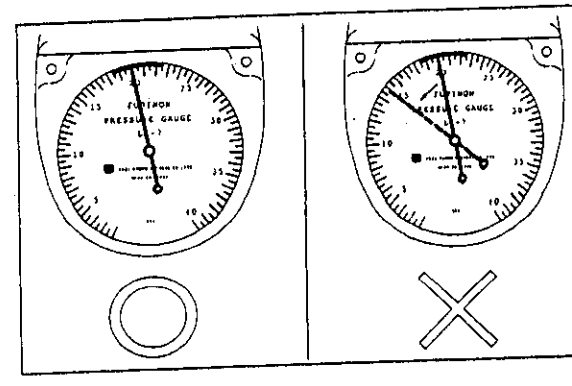

[Note]
A fall of 3 gradations or more means the Endoscope has failed the air tightness test. Do not perform any further washing, and have the Endoscope repaired.

(5) Loosen valve of air tightness tester to release air from Endoscope.

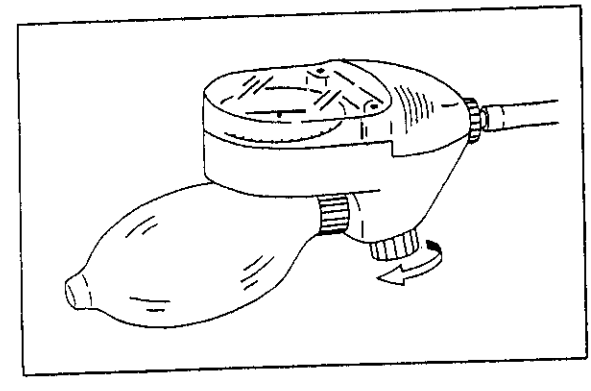

(6) Remove air tightness tester from ventilation connector of Endoscope.

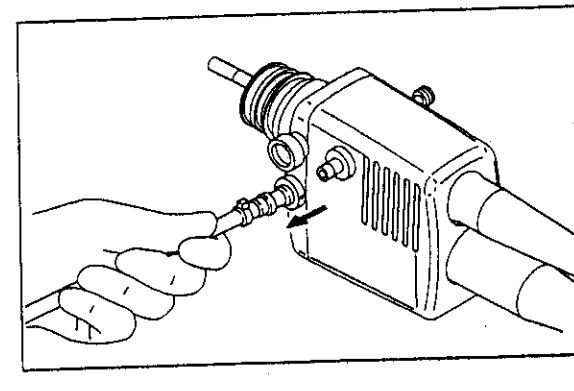

8.5.4 Remove the Air/Water Button, Suction Button and Forceps Valve

Remove air/water button, suction button and forceps valve from Endoscope.

Discard removed forceps valve.

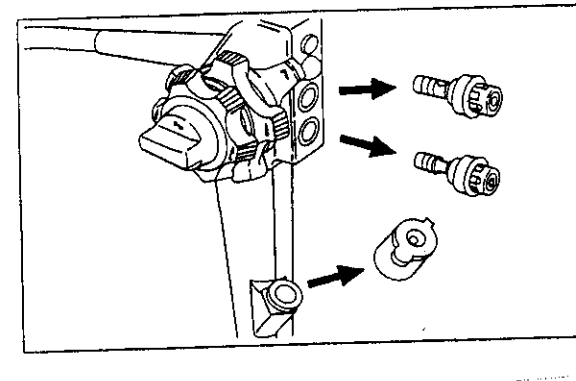

Questions? Contact FDA/CDRH/OCE/DID at CDRH-FOISTATUS@fda.hhs.gov or 301-796-8118

Record processed under FOIA #2015-10057 7/7/16

8.5.5 Brushing the Suction Channel

Brush following three areas with furnished cleaning brush. Repeat brushing three times or more into the cleaning fluid.

- From forceps inlet to distal end of Endoscope
- From suction valve to forceps inlet
- From suction valve to suction connector

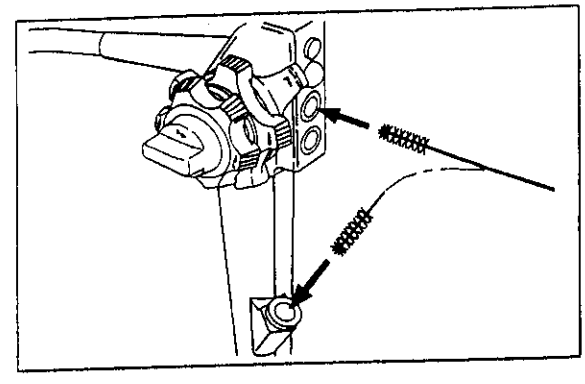

8.5.6 Brushing the Air/Water Supply Channel (Group 8 only)

(1) Attach the insertion adapter WA-500 as shown in the figure.

[Note]
Make sure that the adapter is attached in the proper position and insert it until it stops.

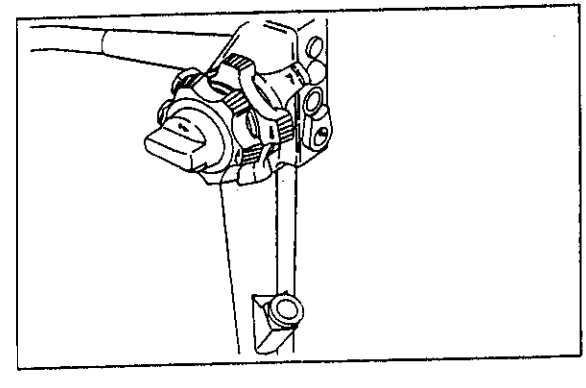

(2) Remove the distal end cap of the Endoscope.

Discard removed distal end cap.

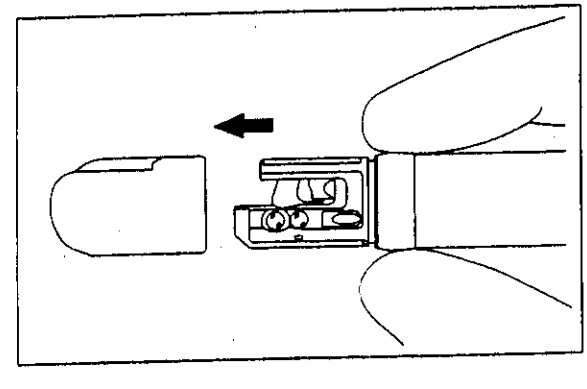

Questions? Contact FDA/CDRH/OCE/DID at CDRH-FOISTATUS@fda.hhs.gov or 301-796-8118

Record processed under FOIA #2015-10057 7/7/16

(3) Clean the inside of the Endoscope by inserting a provided thin cleaning brush through the following five openings:
- From the air supply line of the air/water supply valve to the distal end of the Endoscope
- From the water supply line of the air/water supply valve to the distal end of the Endoscope
- From the air supply line of the air/water supply connector to the air/water supply valve
- From the water supply line of the air/water supply connector to the air/water supply valve
- From the air/water supply connector to the air guide

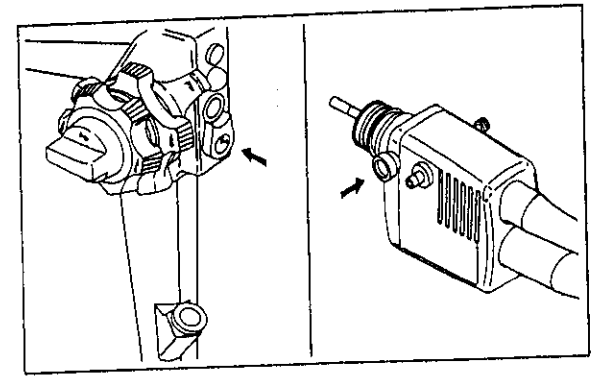

(4) Remove the insertion adapter WA-500.

(5) Using a valve brush WB11001FW2, brush the inside of the suction valve and air/water supply valve.

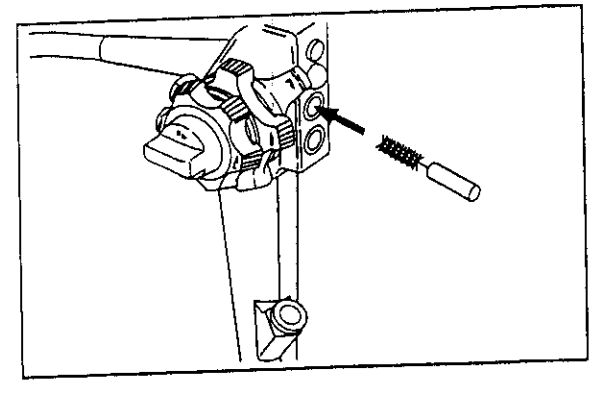

8.5.7 Brushing the Distal End

<Group 5 Endoscope>

Using a valve brush WB11001FW2 or a soft toothbrush, brush the distal end.

- Nozzle
- Forceps inlet
- Forceps elevator mechanism
  (for Endoscopes that have these mechanisms only)

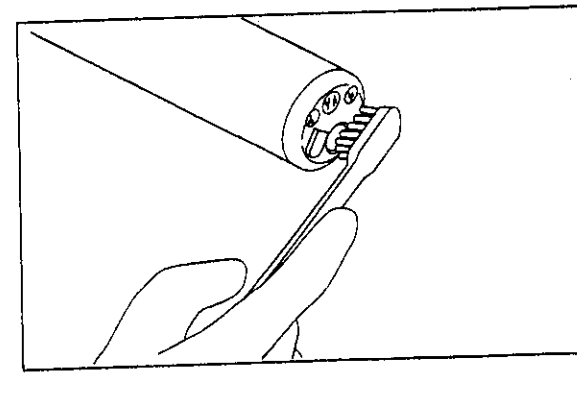

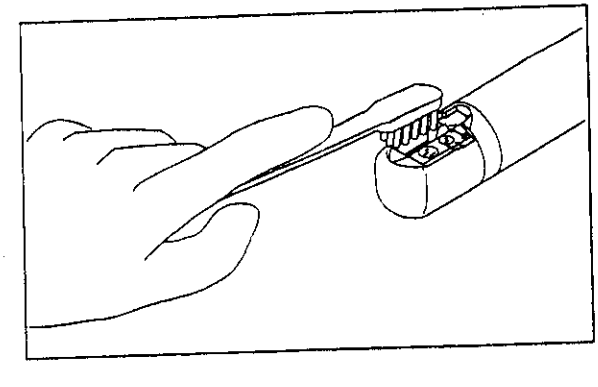

Questions? Contact FDA/CDRH/OCE/DID at CDRH-FOISTATUS@fda.hhs.gov or 301-796-8118

Record processed under FOIA #2015-10057 7/7/16

<Group 8 Endoscope>

Using a valve brush WB11001FW2, brush the distal end.

- Nozzle
- Forceps inlet
- Forceps elevator mechanism
  (for Endoscopes that have these mechanisms only)

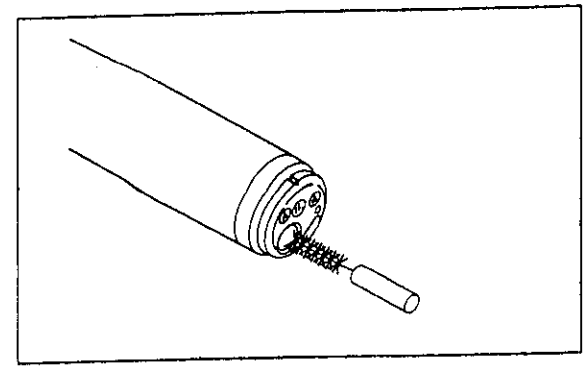

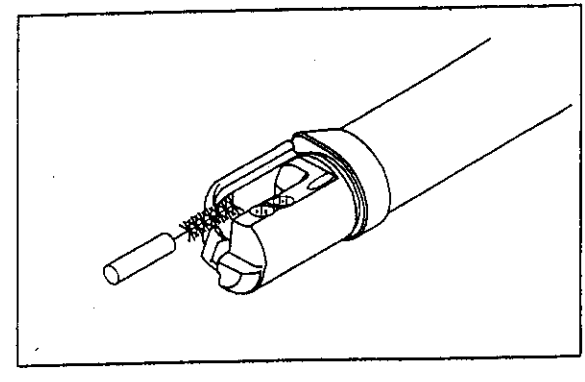

8.5.8 Connecting Cleaning Adapter

(1) Assemble the cleaning adapter by connecting the tube for the air/water supply channel, the tube for the suction channel, the syringe and the valve adapter CA-500S/A as shown at the right

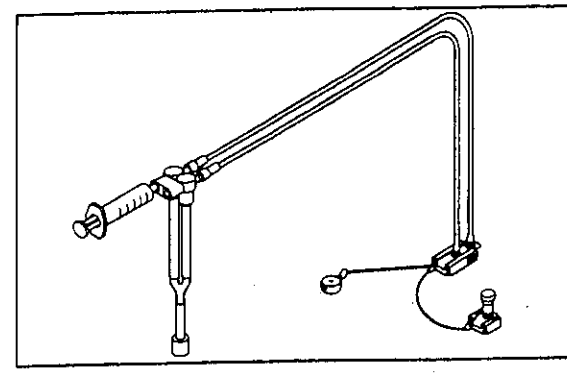

(2) Attach the valve adapter CA-500S/A as shown in the figure.

[Note]
Holding the shaded area of the adapter in your fingers, attach the adapter to the Endoscope body, and then push it in the direction indicated by the arrow.

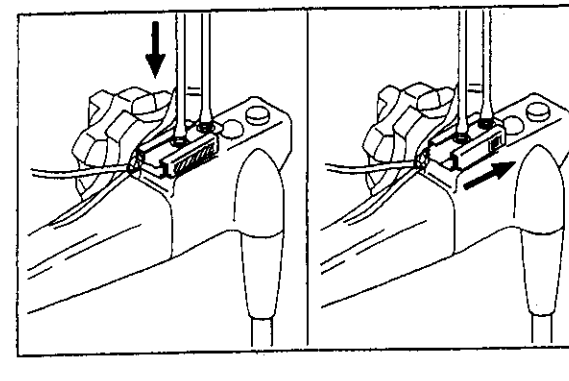

Questions? Contact FDA/CDRH/OCE/DID at CDRH-FOISTATUS@fda.hhs.gov or 301-796-8118

Record processed under FOIA #2015-10057 7/7/16

(3) Attach the forceps inlet cleaning adapter CA-500B/C to the forceps in the same way.

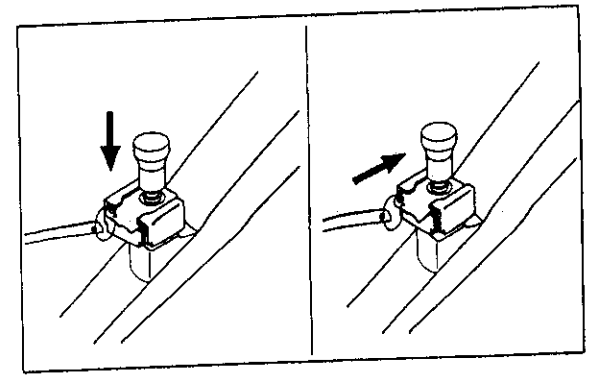

(4) Attach the tank receiving cap CA-500W/T to the water tank receiver.

[Note]
Align the notch on the adapter with the projection on the tank receiver, and rotate and push the adapter against the tank receiver to secure it.

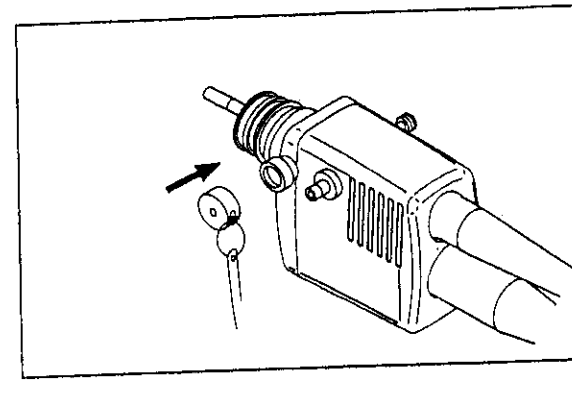

8.5.9 Removing Debris in the Air/Water Nozzle

(1) Attach the cleaning adapter CA-500N to the air/water valve section.

(2) Remove debris by injecting lukewarm water using the syringe.

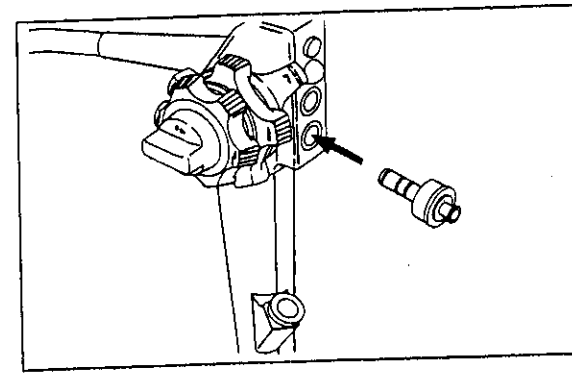

(3) After the debris has been removed, inject air until all the water in the tube is discharged.

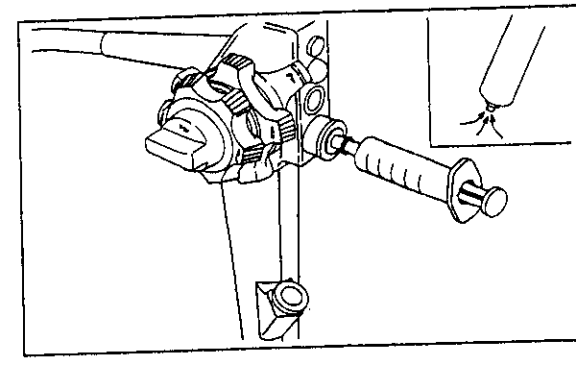

167

Questions? Contact FDA/CDRH/OCE/DID at CDRH-FOISTATUS@fda.hhs.gov or 301-796-8118

Record processed under FOIA #2015-10057 7/7/16

8.5.10 Washing the Air/Water Supply and Suction Channel

(1) Attach a syringe to the air/ water channel side of the cleaning adaptor.

(2) Inject cleaning fluid into air/water supply channel with syringe.

(3) Using a syringe, feed air into the air/water supply channel of the Endoscope to remove cleaning fluid from the channel.

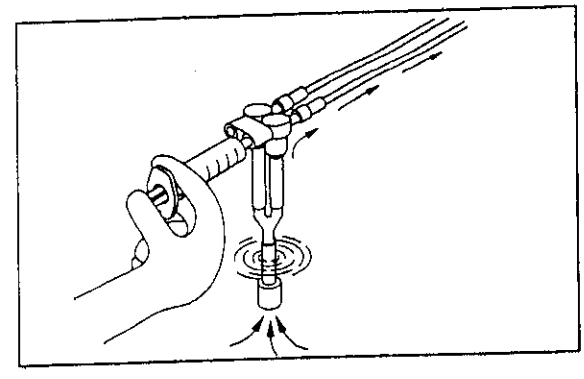

(4) Using a syringe, feed clean water into the air/water supply channel of the Endoscope to rinse cleaning fluid in the channel.

(5) Finally, feed air into the air/water supply channel until moisture is discharged completely.

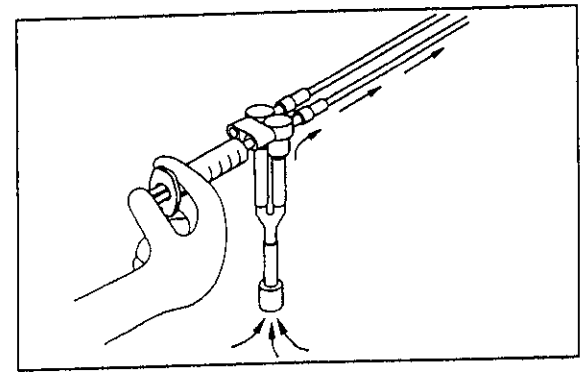

(6) Attach a syringe to suction channel side of the cleaning adaptor.

(7) Inject cleaning fluid into suction channel by syringe.

(8) Using a syringe, feed air into the suction channel of the Endoscope to remove cleaning fluid from the channel.

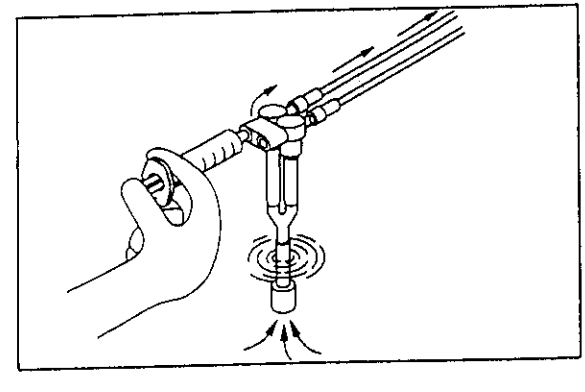

(9) Repeat the steps (7) and (8) a couple of times to feed cleaning fluid and air alternately.

(10) Using a syringe, feed clean water into the suction channel of the Endoscope to rinse cleaning fluid in the channel.

(11) Finally, feed air into the suction channel until moisture is discharged completely.

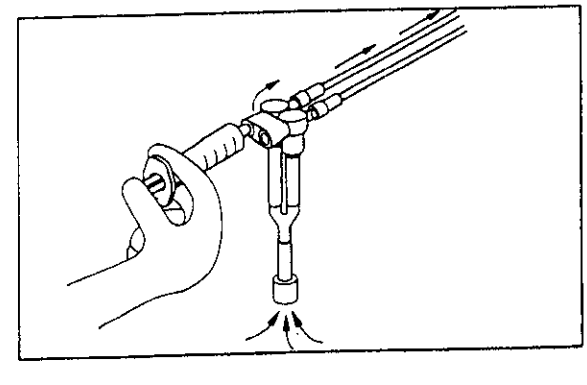

Questions? Contact FDA/CDRH/OCE/DID at CDRH-FOISTATUS@fda.hhs.gov or 301-796-8118

Record processed under FOIA #2015-10057 7/7/16

8.5.11 Washing the Water Jet Channel (for Endoscopes that have these mechanisms only)

(1) Remove the protective cap from the J piping.

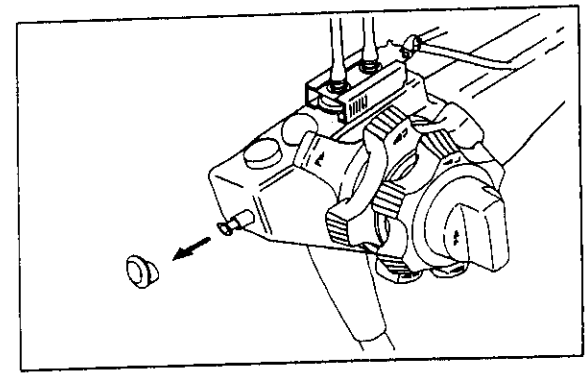

(2) Holding the J piping in your fingers, rotate it counterclockwise to remove it.

[Note]
Clean the J piping separately.

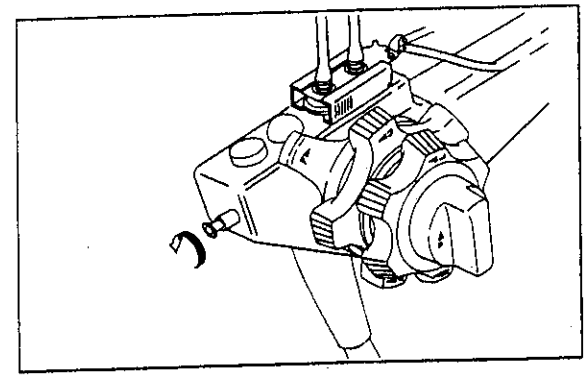

(3) Brush the water jet channel using a provided thin brush. (Group 8 only)

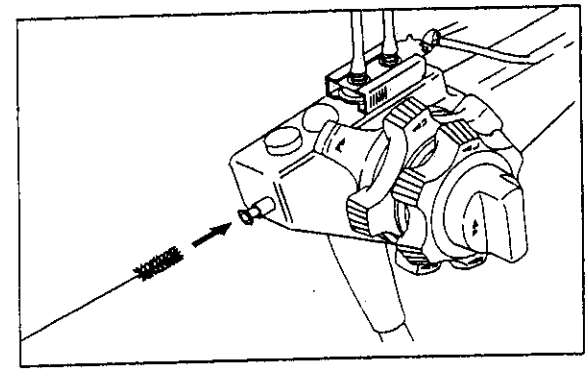

(4) Attach the J washing adapter by rotating it clockwise.

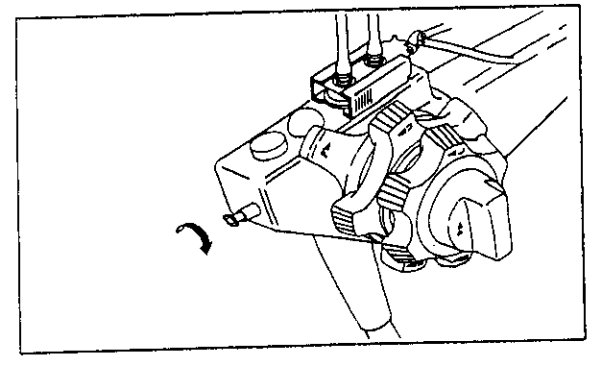

Questions? Contact FDA/CDRH/OCE/DID at CDRH-FOISTATUS@fda.hhs.gov or 301-796-8118

Record processed under FOIA #2015-10057 7/7/16

(5) Attach a syringe filled with cleaning fluid to the J washing adapter.

(6) Using the syringe, inject cleaning fluid into the water jet channel.

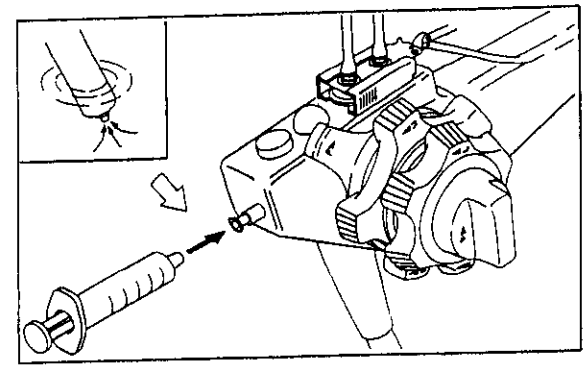

(7) Remove the syringe and fill it with air.

(8) Attach the syringe filled with air to the J washing adapter.

(9) Push air into the water jet channel to eject the cleaning fluid inside the channel.

(10) Repeat steps (5) to (9) 2 or 3 times.

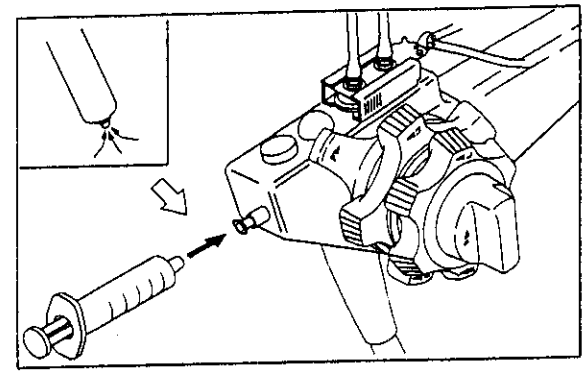

(11) Remove the syringe and fill it with clean water.

(12) Attach the syringe filled with clean water to the J washing adapter.

(13) Push clean water into the water jet channel to eject the cleaning fluid inside the channel.

(14) Finally, feed air into the water jet channel until moisture is discharged completely.

(15) Remove cleaning adapter from Endoscope.

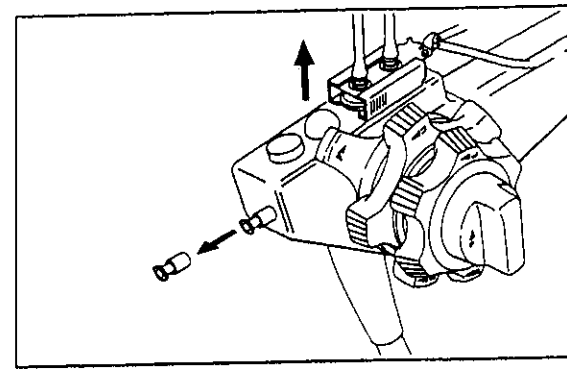

Questions? Contact FDA/CDRH/OCE/DID at CDRH-FOISTATUS@fda.hhs.gov or 301-796-8118

Record processed under FOIA #2015-10057 7/7/16

8.5.12 Washing the Entire Endoscope

⚠ CAUTION

Cleaning liquid might flow into a patient's body.
Alter cleaning, wash away any remaining chemical with water.

(1) Wash the entire Endoscope in cleaning fluid with clean soft sponge.

(2) Rinse Endoscope with running water (clean water).

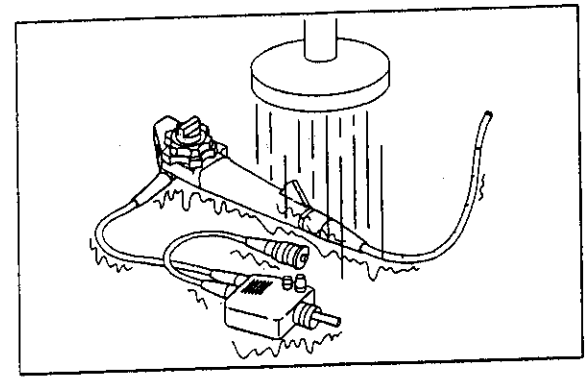

(3) Wipe off any water remaining on the Endoscope with dry sterilize gauze.

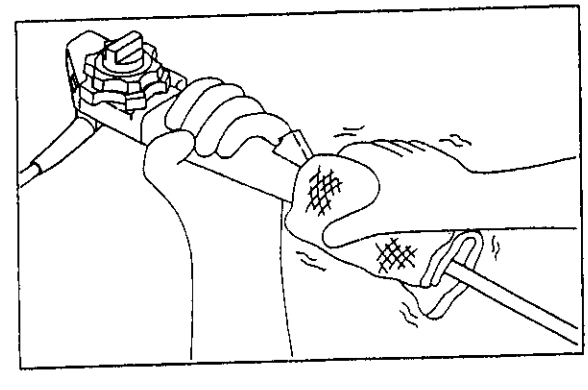

(4) Attach each washing adapter, feed air using a syringe, and remove moisture from the channels.

[Note]
Feed air into the air/water supply channel, the suction channel, and the water jet channel (when provided) until moisture is discharged completely.

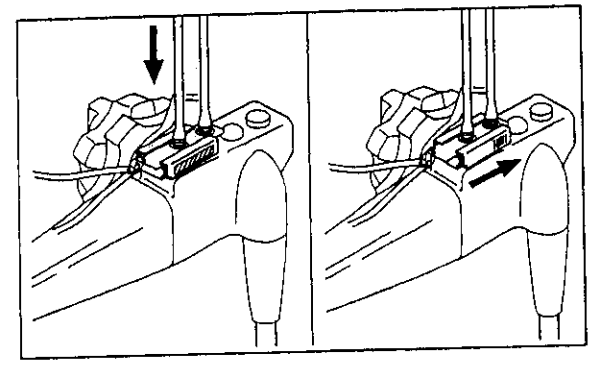

Questions? Contact FDA/CDRH/OCE/DID at CDRH-FOISTATUS@fda.hhs.gov or 301-796-8118

Record processed under FOIA #2015-10057 7/7/16

8.6 Washing and Sterilize Biopsy Forceps

⚠ WARNING

Sterility might not be maintained if the sterilized pack is ruptured.
Close the cap before putting the forceps in a sterilized pack.

For operational methods of the ultrasonic cleaning unit/autoclaving unit, please follow the instructions described in each operation manual for the respective units.

(1) Wipe the surface of the forceps with gauze soaked in cleaning fluid.

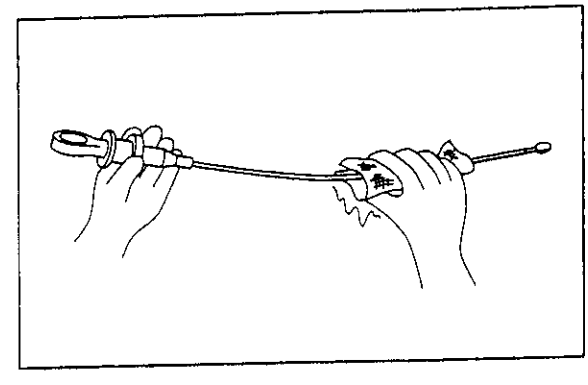

(2) Brush entire forceps in cleaning fluid using a soft toothbrush.

(3) Clean entire biopsy forceps using the ultrasonic cleaning unit.

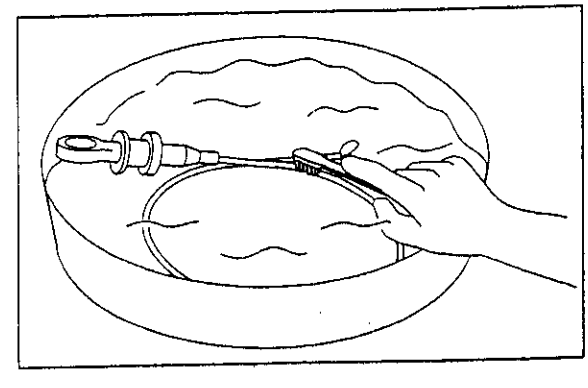

(4) Pull out the forceps from the cleaning fluid and wash it off with running water (clean water).

(5) Wipe off the remaining water on the forceps with dry sterilized gauze.

(6) Coil the insertion portion and seal it in a sterilized pack.

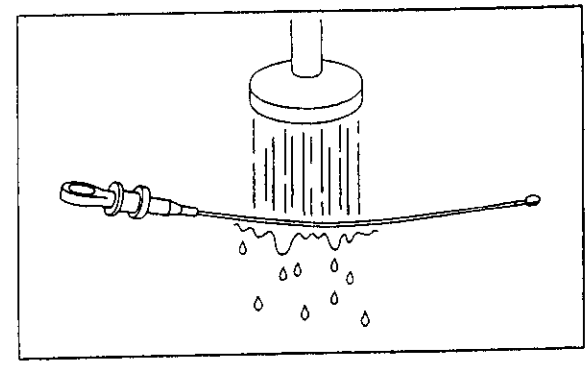

Questions? Contact FDA/CDRH/OCE/DID at CDRH-FOISTATUS@fda.hhs.gov or 301-796-8118

Record processed under FOIA #2015-10057 7/7/16

(7) Carry out an autoclaving operation in accordance with the operation manual of the autoclaving unit.

Recommended autoclaving conditions

Temperature	Actuating time
121°C	15 min. or more
134°C	3 min. or more

8.7 Washing and Sterilize Cannulation Tube

For operational methods of the ultrasonic cleaning unit/autoclaving unit, please follow the instructions described in each operation manual for the respective units.

(1) Wipe the surface of the cannulation tube with gauze soaked in cleaning fluid.

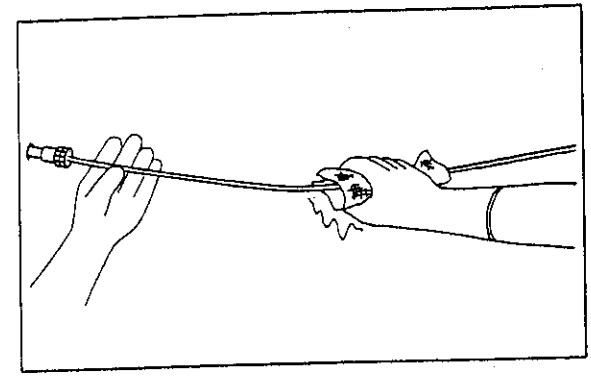

(2) Inject cleaning fluid into the cannulation tube in the cleaning fluid using a syringe.

(3) Wash the cannulation tube using the ultrasonic cleaning unit.

(4) Pull out the cannulation tube from the cleaning fluid and rinse it off by injecting clean water in the cannulation tube using a syringe.

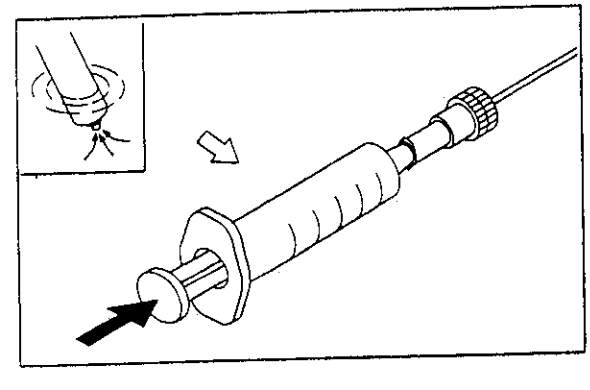

Questions? Contact FDA/CDRH/OCE/DID at CDRH-FOISTATUS@fda.hhs.gov or 301-796-8118

Record processed under FOIA #2015-10057 7/7/16

(5) Pull out the cannulation tube from the cleaning fluid and wash it off with running water (clean water).

(6) Wipe off the remaining water on the tube with dry sterilized gauze.

(7) Round the insertion portion and seal it in a sterilized pack.

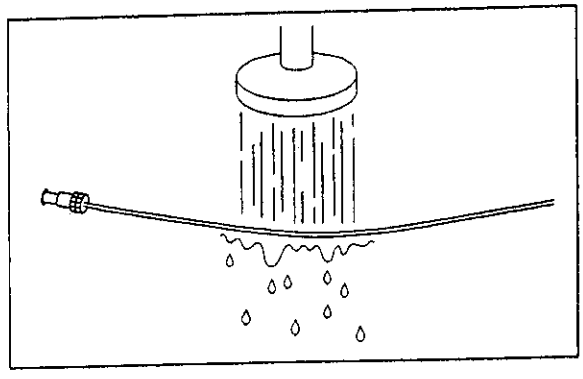

(8) Carry out an autoclaving operation in accordance with the operation manual of the autoclaving unit.

Recommended autoclaving conditions

Temperature	Actuating time
121°C	15 min. or more
134°C	3 min. or more

8.8 Washing, Disinfecting and Sterilize Mouthpiece

For operational methods of the ultrasonic cleaning unit/autoclaving unit, please follow the instructions described in each operation manual for the respective units.

(1) Wipe the surface of the mouthpiece with gauze soaked in cleaning fluid.

(2) Brush the entire mouthpiece in the cleaning fluid using a soft toothbrush.

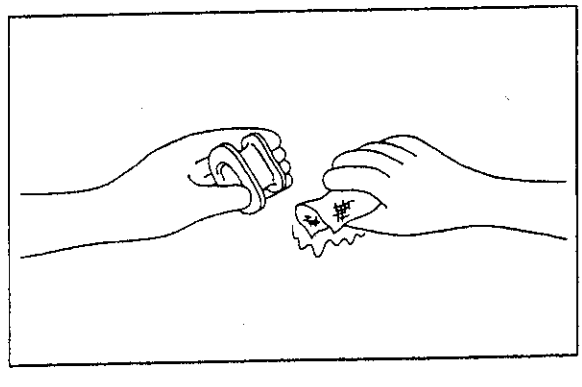

(3) Wash the mouthpiece using the ultrasonic cleaning unit.

(4) Pull out the mouthpiece from the cleaning fluid and wash it off with running water (clean water).

(5) Wipe off the remaining water on the mouthpiece with dry sterilized gauze.

(6) Seal the mouthpiece in a sterilized pack.

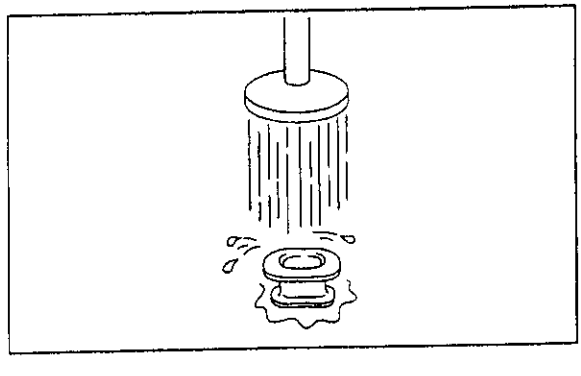

Questions? Contact FDA/CDRH/OCE/DID at CDRH-FOISTATUS@fda.hhs.gov or 301-796-8118

Record processed under FOIA #2015-10057 7/7/16

(7) Carry out an autoclaving operation in accordance with the operation manual of the autoclaving unit.

Recommended autoclaving conditions

Temperature	Actuating time
121°C	15 min. or more
134°C	3 min. or more

[Note]

When you carry out disinfection using chemical solution, follow the conditions indicated in Table 9.2, Chapter 9.

8.9 Washing, Disinfecting and Sterilize Air/Water Button and Suction Button

For operational methods of the ultrasonic cleaning unit/autoclaving unit, please follow the instructions described in each operation manual for the respective units.

(1) Brush the entire button in the cleaning fluid while the buttons are actuated using a soft toothbrush.

(2) Wash the buttons using the ultrasonic cleaning unit.

(3) Pull the buttons out from the cleaning fluid and wash off with running water (clean water).

(4) Wipe off the remaining water on the buttons with dry sterilized gauze.

(5) Seal the buttons in a sterilized pack.

(6) Carry out an autoclaving operation in accordance with the operation manual of the autoclaving unit.

(7) Lightly apply supplied silicone oil at the actuating portion of the buttons and store them.

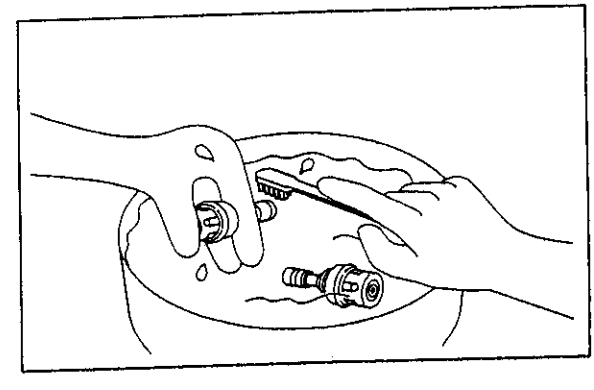

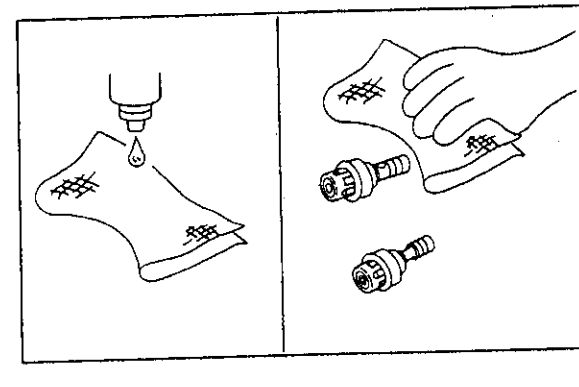

Questions? Contact FDA/CDRH/OCE/DID at CDRH-FOISTATUS@fda.hhs.gov or 301-796-8118

Record processed under FOIA #2015-10057 7/7/16

8.10 Washing, Disinfecting and Sterilize J Piping, Distal End Hood and Forceps Valve

For operational methods of the ultrasonic cleaning unit/autoclaving unit, please follow the instructions described in each operation manual for the respective units.

(1) Wipe the surface of the parts with gauze soaked in cleaning fluid.

(2) Brush the entire J cleaning adaptor, distal end hood and forceps valve in the cleaning fluid using a soft toothbrush.

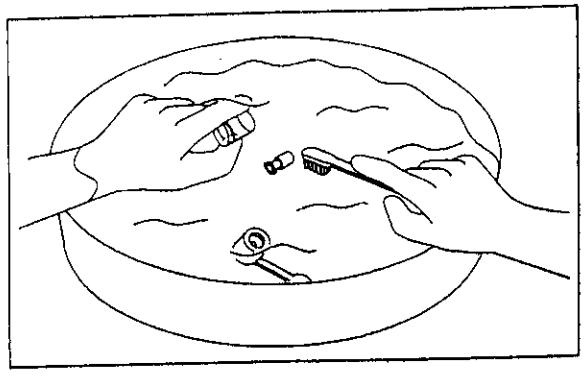

(3) Wash the J cleaning adaptor, distal end hood and forceps valve using the ultrasonic cleaning unit.

(4) Pull out the J cleaning adaptor, distal end hood and forceps valve from the cleaning fluid and wash it off with running water (clean water).

(5) Wipe off the remaining water on the parts with dry sterilized gauze.

(6) Seal the J cleaning adaptor, distal end hood and forceps valve in a sterilized pack.

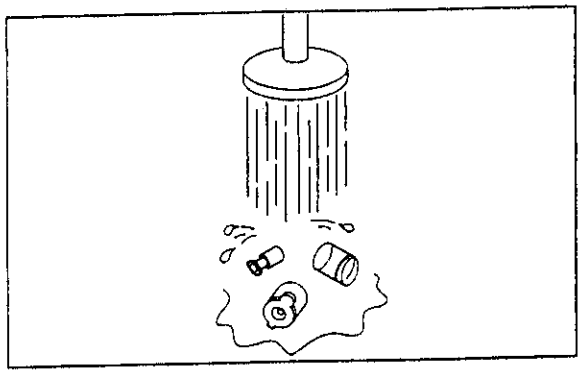

(7) Carry out an autoclaving operation in accordance with the operation manual of the autoclaving unit.

Recommended autoclaving conditions

Temperature	Actuating time
121°C	15 min. or more
134°C	3 min. or more

[Note]

When you carry out disinfection using chemical solution, follow the conditions indicated in Table 9.2, Chapter 9.

Questions? Contact FDA/CDRH/OCE/DID at CDRH-FOISTATUS@fda.hhs.gov or 301-796-8118

Record processed under FOIA #2015-10057 7/7/16

8.11 Washing and Disinfecting Distal End Cap and Cap Check Ring

For operational method of the ultrasonic cleaning unit, please follow the instructions described in the operation manual for the respective units.

(1) Brush the entire distal end cap and cap check ring in the cleaning fluid using a soft toothbrush.

(2) Wash the distal end cap and cap check ring using the ultrasonic cleaning unit.

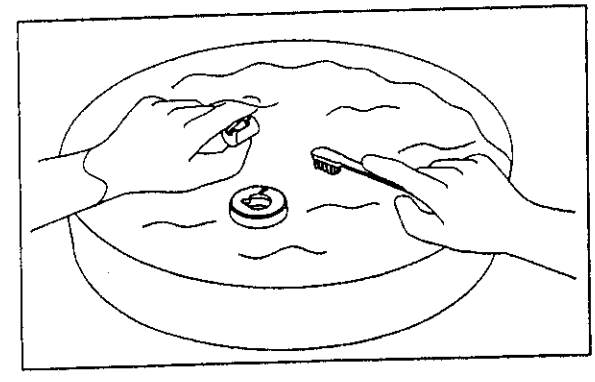

(3) Pull out the distal end cap and cap check ring from the cleaning fluid and wash it off with running water (clean water).

(4) Wipe off the remaining water on the parts with dry sterilized gauze.

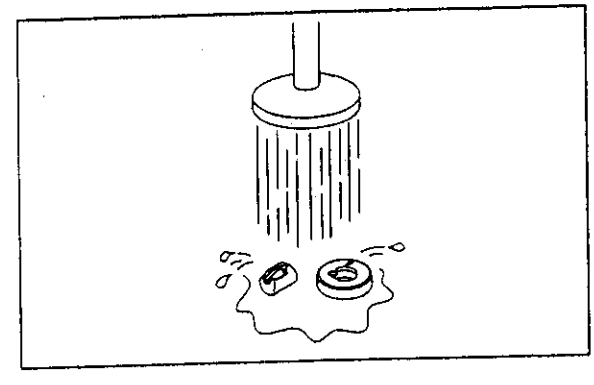

(5) Immerse the parts in chemical solution for the prescribed time.

(6) After the parts have been thoroughly rinsed with running water (sterilized water), remove remaining water completely using dry sterilized gauze to dry the parts.

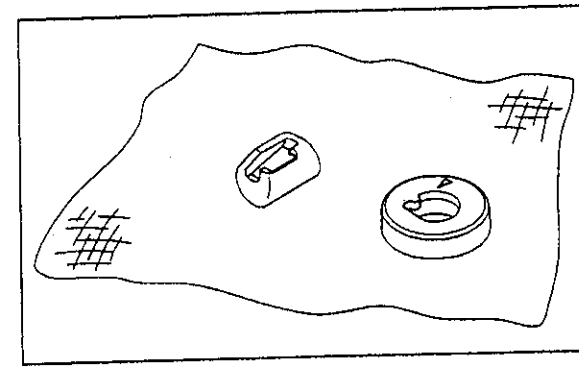

Questions? Contact FDA/CDRH/OCE/DID at CDRH-FOISTATUS@fda.hhs.gov or 301-796-8118

Record processed under FOIA #2015-10057 7/7/16

8.12 Washing and Disinfecting Cleaning Brush

For operational method of the ultrasonic cleaning unit, please follow the instructions described in the operation manual for the respective units.

(1) Brush the entire cleaning brushes in the cleaning fluid using a soft toothbrush.

(2) Wash the cleaning brushes using the ultrasonic cleaning unit.

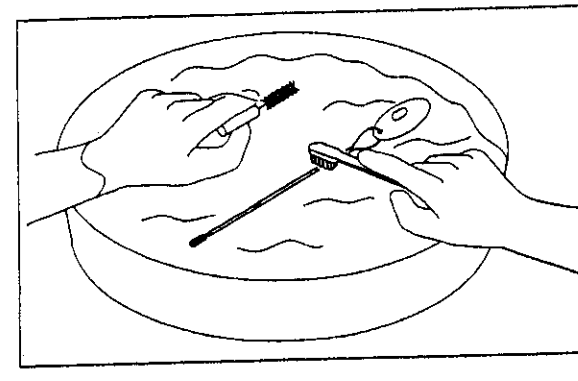

(3) Pull out the cleaning brushes from the cleaning fluid and wash off with running water (clean water).

(4) Wipe off the remaining water on the parts with dry sterilized gauze.

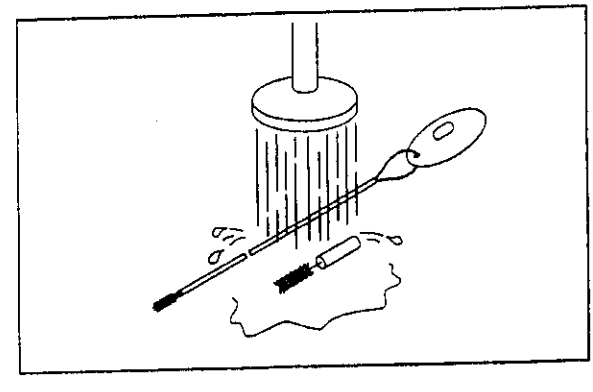

(5) Immerse the parts in chemical solution for the prescribed time.

(6) After the parts have been thoroughly rinsed with running water (sterilized water), remove remaining water completely using dry sterilized gauze to dry the parts.

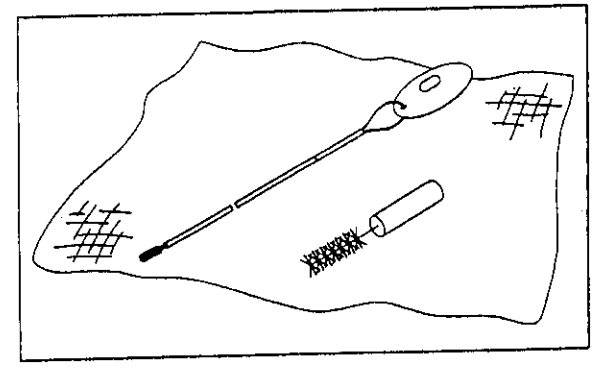

Questions? Contact FDA/CDRH/OCE/DID at CDRH-FOISTATUS@fda.hhs.gov or 301-796-8118

Record processed under FOIA #2015-10057 7/7/16

Chapter 9 Chemical Disinfection

This chapter describes methods of chemical disinfection.
Carry out chemical disinfection after first and second washing.

9.1 Methods of Chemical Disinfection 9-2
9.2 Conditions of Disinfection 9-3
9.3 Chemical Disinfection of Endoscope 9-4
9.3.1 Injecting Chemical Solution into Air/Water Supply Channel 9-4
9.3.2 Injecting Chemical Solution into Suction Channel 9-4
9.3.3 Injecting Chemical Solution into Water Jet Channel 9-5
9.3.4 Immersion in Chemical Solution 9-5
9.4 Rinsing of Endoscope 9-6
9.4.1 Injecting Sterilized Water 9-6
9.4.2 Drying 9-8

Questions? Contact FDA/CDRH/OCE/DID at CDRH-FOISTATUS@fda.hhs.gov or 301-796-8118

Record processed under FOIA #2015-10057 7/7/16

Chapter 9 Chemical Disinfection

9.1 Methods of Chemical Disinfection

CAUTION

Endoscope will be damaged by high temperature.
Do not use boiling or autoclaving for Endoscope.

To enhance the effect of disinfection, carry out first and second washing meticulously before disinfection according to Sections 8.4 and 8.5.

Use tap water and disinfectants for disinfection. Regarding disinfectants, we recommend you to use chemicals listed in Table 9.2.

Table 9.1 Applicable methods of washing, disinfectant and sterilization for Endoscope and accessories

Endoscope and accessories	Method of washing		Method of disinfection and sterilization		
	Chemical cleaning	Ultrasonic cleaning	Autoclaving	Chemical disinfection	Gas sterilization
Endoscope	○	○ *1	×	○ *2	○ *3
Air/Water button	○	○ *1	○	○	○
Suction button	○	○ *1	○	○	○
Biopsy forceps	○	○	○	-	○
Water tank	○	○	○	○	×
Mouthpiece	○	○	○	○	○
Distal end cap	○	○	×	○	○
Cleaning brush	○	○	×	○	○
J piping	○	○	○	○	○
Forceps valve	○	○	○	○	○
Carrying case	×	×	×	×	×
Protective cap	○	○	×	○	×
Cleaning adapter	○	×	×	○	×
Distal end hood	○	○	○	○	○
Cap check ring	○	○	×	○	○

*1: Use the ultrasonic cleaning unit specialized for Endoscope.
*2: Follow conditions of disinfection (Section 9.2).
*3: Follow conditions of gas sterilization (Section 10.1).

Questions? Contact FDA/CDRH/OCE/DID at CDRH-FOISTATUS@fda.hhs.gov or 301-796-8118

Record processed under FOIA #2015-10057 7/7/16

9.2 Conditions of Disinfection

Regarding chemicals for use in disinfection, we recommend you to use chemicals listed in Table 9.2. We have confirmed that Endoscopes, biopsy forceps, snares, and the like have resistance to these disinfectants.

If you want to use disinfectants other than those listed here, inquire of us about the resistance of Endoscopes, biopsy forceps, snares, or the like to them beforehand.

In relation to resistance of equipment, use disinfection conditions not severer than those specified in table below.

For effects, dilution, and preparation of chemicals under working conditions shown in table below, refer to manufacturers of respective chemicals. Besides, some chemicals require "precautions in use" or "handling precautions," such as wearing of gloves, to be observed. Refer also to instruction manuals of respective chemicals.

Table 9.2 Chemicals used for disinfection and conditions

Chemicals	Manufacturer	Trade name	How to use	
			Dilution ratio	Duration of effect
Glutaraldehyde*	Maruishi Pharmaceutical Co., Ltd.	Steriscope 3 w/v% solution	Original solution	Max : 25 min. Min : 15 min.
	Johnson & Johnson	Cidex 2.25 w/v% solution	Original solution	Max : 40 min. Min : 30 min.
		Cidex Plus 28 3.5 w/v% solution	Original solution	Max : 30 min. Min : 20 min.
Ohtho-phthalaldehyde*	Johnson & Johnson	CIDEX OPA	Original solution	Max : 15 min. Min : 5 min.

*:An enough sporicidal activity might not be able to be expected in the usage of this table description.

Questions? Contact FDA/CDRH/OCE/DID at CDRH-FOISTATUS@fda.hhs.gov or 301-796-8118

Record processed under FOIA #2015-10057 7/7/16

9.3 Chemical Disinfection of Endoscope

9.3.1 Injecting Chemical Solution into Air/Water Supply Channel

➜ "8.5.8 Connecting Cleaning Adapter" (p.8-14)

(1) Attach a syringe to the air/ water channel side of the cleaning adaptor.

(2) Inject chemical solution into air/water supply channel with syringe.
Repeat this step several times until no more bubbles come from distal end of Endoscope, air/water supply connector, and air supply tube.

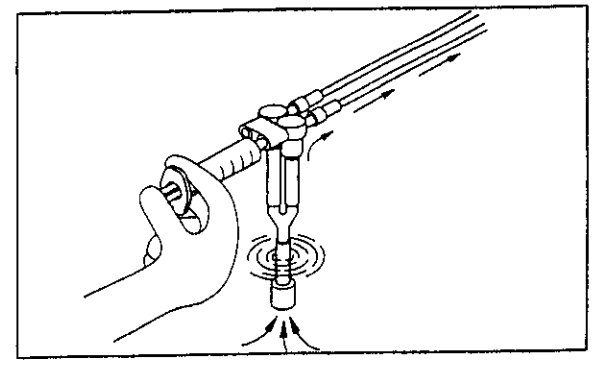

9.3.2 Injecting Chemical Solution into Suction Channel

(1) Attach a syringe to suction channel side of the cleaning adaptor.

(2) Inject chemical solution into suction channel by syringe. Repeat this step several times until no more bubbles come from distal end of Endoscope and suction connector.

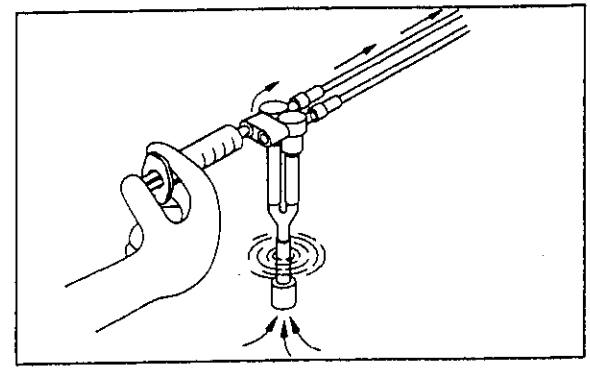

(3) Remove cleaning adapter (valve adapter, forceps inlet cleaning adapter and tank receiving cap) from Endoscope, and immerse it in chemical solution for the prescribed time for disinfection.

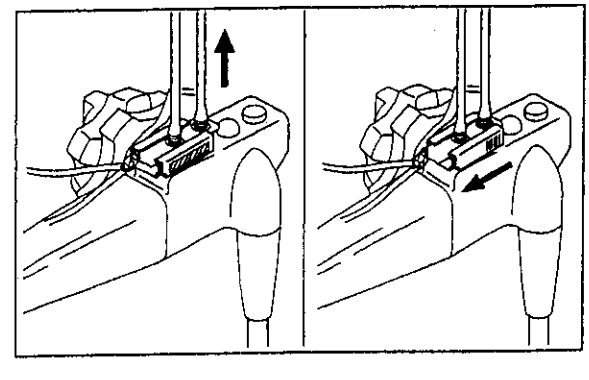

Questions? Contact FDA/CDRH/OCE/DID at CDRH-FOISTATUS@fda.hhs.gov or 301-796-8118

Record processed under FOIA #2015-10057 7/7/16

9.3.3 Injecting Chemical Solution into Water Jet Channel (for Endoscopes that have these mechanisms only)

→ "8.5.11 Washing the Water Jet Channel" (p.8-17)

(1) Using a syringe, charge a chemical solution into the water jet channel of the Endoscope.
Repeat this several times until no more bubbles come out of the distal end of the Endoscope.

(2) Remove cleaning adapter from Endoscope, and immerse it in chemical solution for the prescribed time for disinfection.

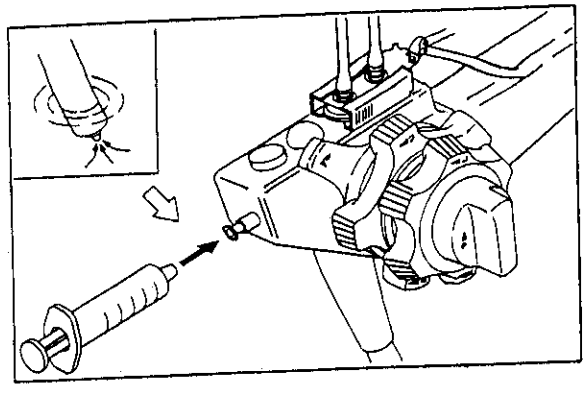

9.3.4 Immersion in Chemical Solution

(1) Attach the protective cap to the end of the EVE connector.

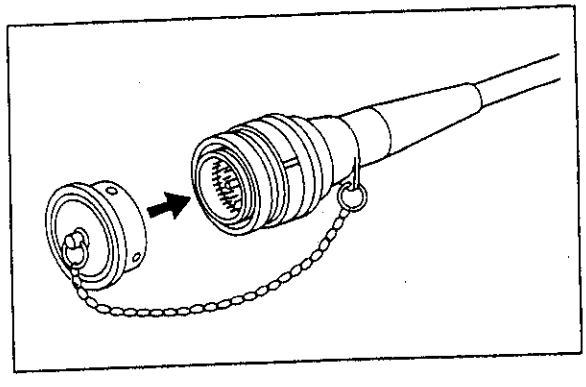

(2) Immerse entire Endoscope in chemical solution.

→ "9.2 Conditions of Disinfection" (p.9-3)

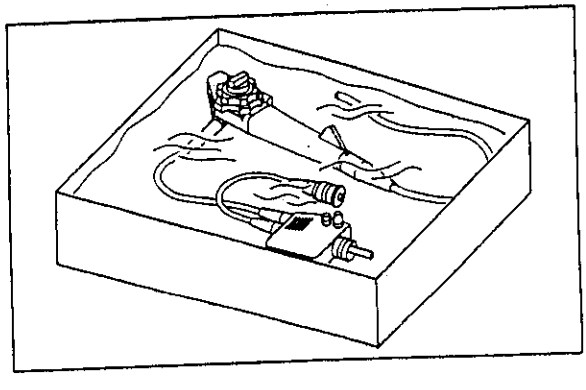

Questions? Contact FDA/CDRH/OCE/DID at CDRH-FOISTATUS@fda.hhs.gov or 301-796-8118

Record processed under FOIA #2015-10057 7/7/16

9.4 Rinsing of Endoscope

9.4.1 Injecting Sterilized Water

⚠ CAUTION

Disinfecting liquid might flow into a patient's body.
After immersing in the chemical solution, wash off remaining chemical solution with sterilized water.

(1) Pull out Endoscope from chemical solution.

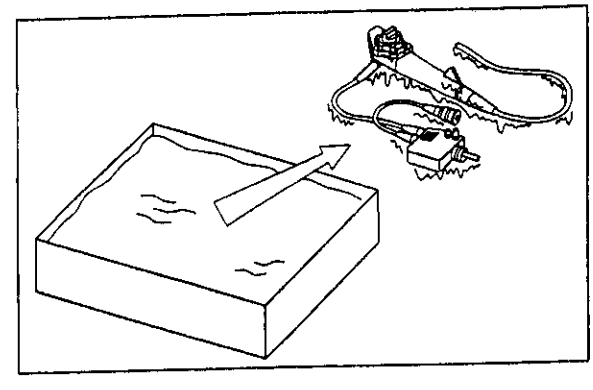

(2) Attach cleaning adapter to Endoscope.

(3) Attach a syringe to the air/ water channel side of the cleaning adaptor.

(4) Inject sterilized water into air/water supply channel of Endoscope with a syringe to remove the remaining chemical solution in the channel.
Repeat this step several times so that no chemical solution remains in the channel.

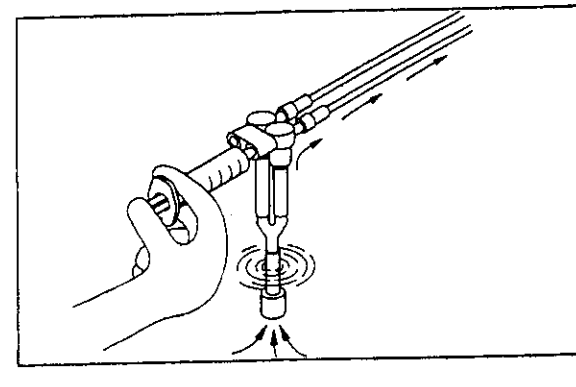

Questions? Contact FDA/CDRH/OCE/DID at CDRH-FOISTATUS@fda.hhs.gov or 301-796-8118

Record processed under FOIA #2015-10057 7/7/16

(5) Attach a syringe to suction channel side of the cleaning adaptor.

(6) Inject sterilized water into suction channel of Endoscope with a syringe to remove the remaining chemical solution in the channel.
Repeat this step several times so that no chemical solution remains in the channel.

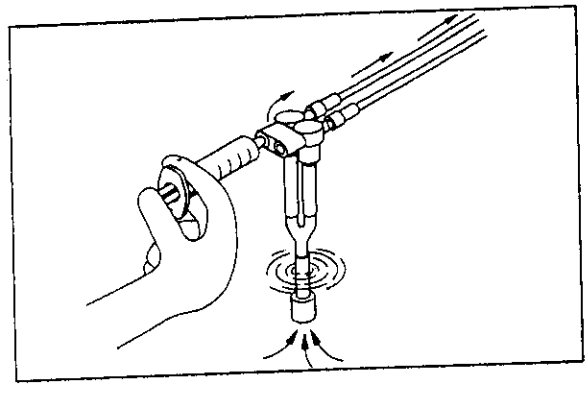

(7) Remove the cap of forceps inlet cleaning adapter.

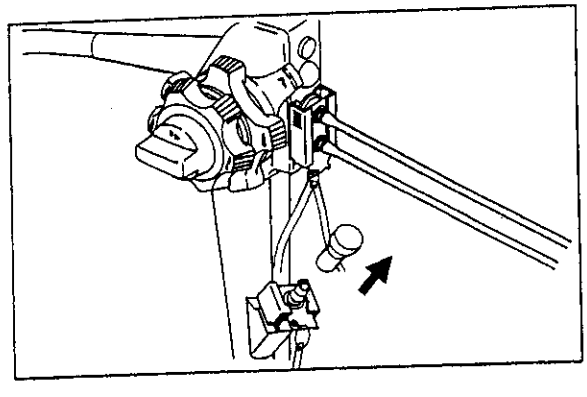

(8) Inject sterilized water into forceps inlet with a syringe to remove remaining chemical solution in the forceps inlet.

(9) Attach the washing adapter to the water jet channel (when provided) as well.

(10) Inject sterilized water into the water jet channel with a syringe to remove remaining chemical solution.

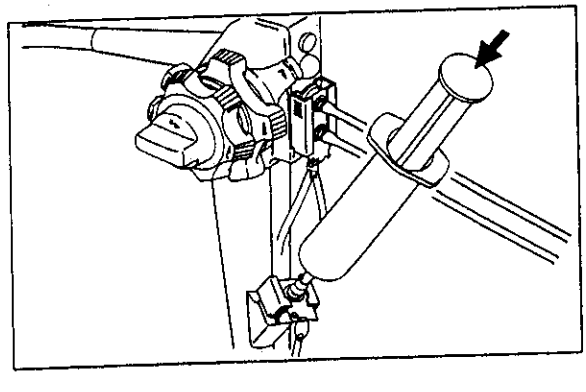

(11) Remove cleaning adapter from Endoscope.

(12) Flush the entire Endoscope with running water (sterilized water).
Thoroughly flush it with running water (sterilized water) so that no chemical solution remains on the Endoscope.

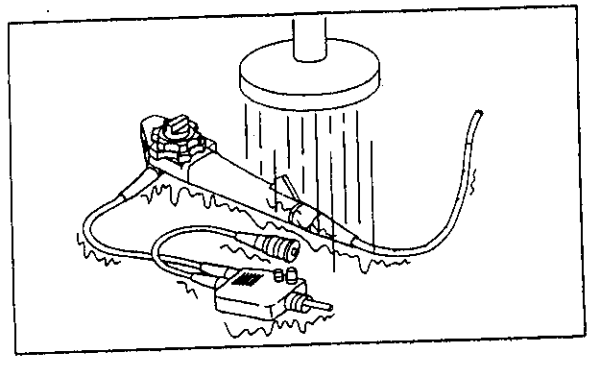

Questions? Contact FDA/CDRH/OCE/DID at CDRH-FOISTATUS@fda.hhs.gov or 301-796-8118

Record processed under FOIA #2015-10057 7/7/16

9.4.2 Drying

<Drying the Endoscope>

(1) Wipe water off external surfaces of Endoscope with dry sterilize gauze.

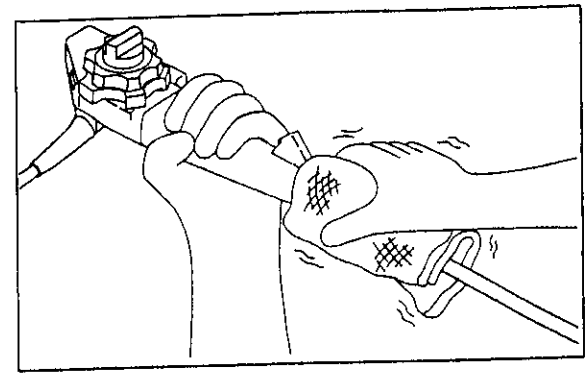

(2) Attach cleaning adapter to Endoscope.

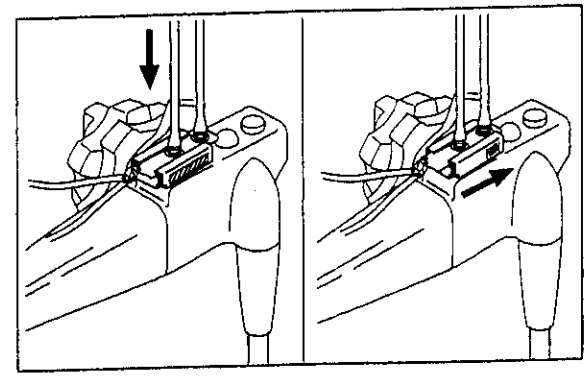

(3) Send air into air/water supply, suction and water Jet channels of Endoscope to drain them.

(4) Send ethanol of 70% into air/water supply, suction and water jet channels of Endoscope to drain them.

(5) Using a syringe, feed air into the air/water supply, suction and water jet channels of the Endoscope to dry ethanol from the channel.

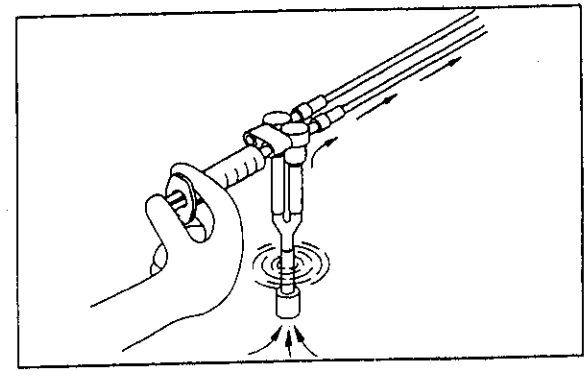

Questions? Contact FDA/CDRH/OCE/DID at CDRH-FOISTATUS@fda.hhs.gov or 301-796-8118

Record processed under FOIA #2015-10057 7/7/16

<Drying the Air/Water Supply Channel>

(1) Remove the protective cap from the end of the EVE connector.

(2) Clean the end of the EVE connector with dry sterilize ganze.

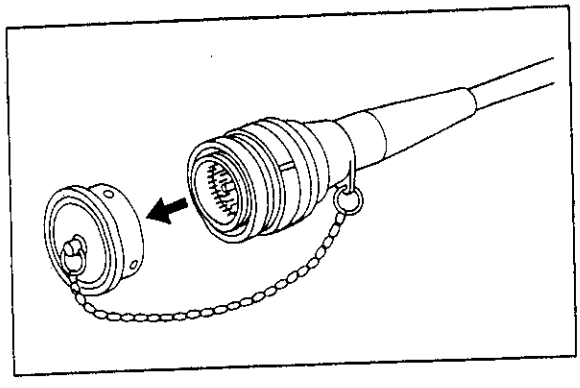

(3) Connect LG connector to the light source.

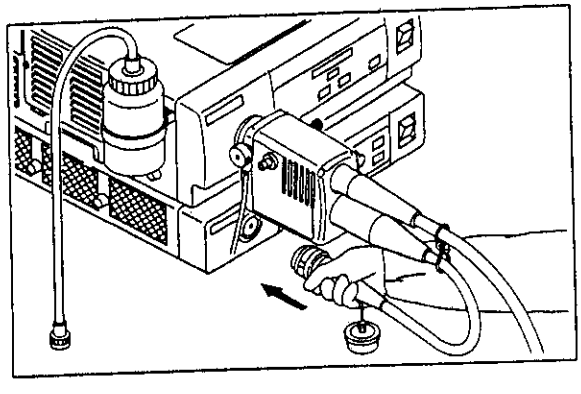

(4) Attach a syringe to the air/ water channel side of the cleaning adaptor.

(5) Turn on the power supply of the light source equipment and operate the air supply pump for 10 minutes to dry the inside of the channel.

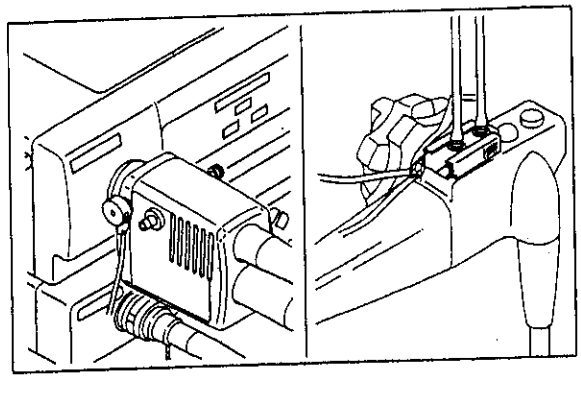

<Drying the Suction Channel>

(1) Connect tube from suction unit to suction connector of Endoscope.

(2) Attach a syringe to suction channel side of the cleaning adaptor.

(3) Turn on the power supply of the suction unit and dry the inside of the tube for 10 minutes.

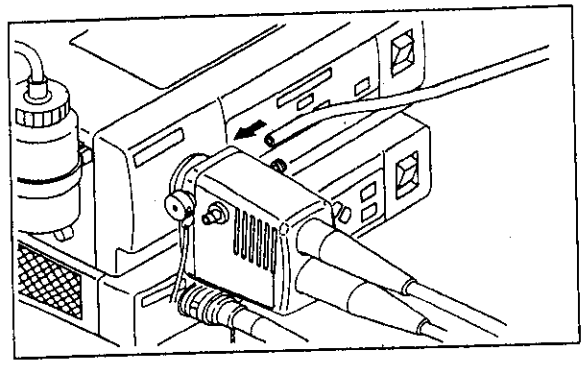

Questions? Contact FDA/CDRH/OCE/DID at CDRH-FOISTATUS@fda.hhs.gov or 301-796-8118

Record processed under FOIA #2015-10057 7/7/16

(4) Lightly apply supplied silicone oil to the actuating portions of the air/water supply button and suction button using sterilized gauze impregneted with the silicone oil, then mount the buttons onto the Endoscope.

If an excessive amount of silicone oil is applied to the buttons, remaining water on the objective lens may be difficult to remove.

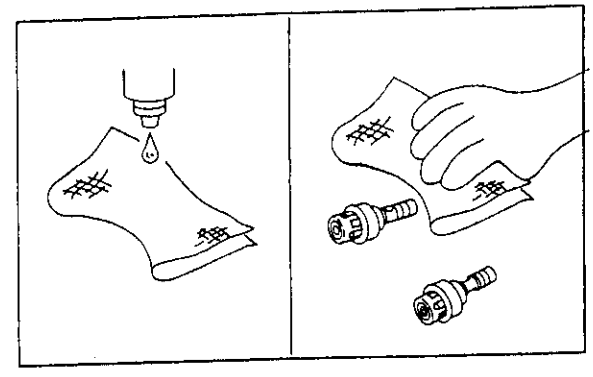

(5) Put a new forceps valve in forceps inlet.

(6) Wipe water off external surfaces of Endoscope.

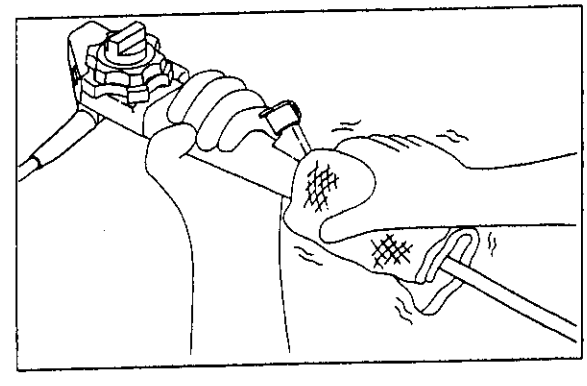

Record processed under FOIA #2015-10057 7/7/16

Chapter 10 Gas Sterilization

This chapter describes methods of gas sterilization.

10.1 Conditions of Gas Sterilization 10-2
10.2 EOG (Ethylene Oxide Gas) Sterilization 10-4

Questions? Contact FDA/CDRH/OCE/DID at CDRH-FOISTATUS@fda.hhs.gov or 301-796-8118

Record processed under FOIA #2015-10057 7/7/16

Chapter 10 Gas Sterilization

⚠ WARNING

Applying gas sterilization to wet parts presents incomplete sterilization.
Proceed gas sterilization after vaporizing water out of Endoscope.

⚠ CAUTION

Gas remaining in Endoscope after gas sterilization is harmful to human body.
Proceed aeration after gas sterilization.

CAUTION

Endoscope will be damaged by high temperature.
Do not use boiling or autoclaving for Endoscope.

Use gas sterilization for sterilization of 400 System Endoscopes, 200 System Endoscopes Group 5, Group 8.
To enhance the effect of sterilization, carry out first and second washing before gas sterilization according to Sections 8.4 and 8.5.

10.1 Conditions of Gas Sterilization

For gas sterilization, we recommend you to use chemicals listed in Table 10.1. We have confirmed that Endoscopes, biopsy forceps, snares, and the like have resistance to methods of sterilization listed in these tables.

If you wish to use chemicals and/or conditions other than those listed in Table 10.1, please make inquiries at our company about the resistance of Endoscopes, biopsy forceps, snares and the like in advance.

For the sterilization effect under the conditions indicted in Table 10.1 and handling details, please make inquiries at the manufacturer of relevant equipment.

Questions? Contact FDA/CDRH/OCE/DID at CDRH-FOISTATUS@fda.hhs.gov or 301-796-8118

Record processed under FOIA #2015-10057 7/7/16

Table 10.1 Conditions of EOG sterilization (chamber type)

Concentration of Ethylene Oxide	Temperature	Humidity	Pressure	Time	Aeration
20 v/v%	55°C	Normal humidity	167kPa*	4 hours	Atmospheric Pressure

*167kPa ≒ 1.7 kg/cm^2

Table 10.2 Applicable methods of washing, disinfectant and sterilization for Endoscopes and accessories

Endoscope and Accessories	Washing methods		Method of disinfection and sterilization		
	Chemical cleaning	Ultrasonic cleaning	Autoclaving	Chemical Disinfection	Gas Sterilization
Endoscope	○	○ *1	×	○ *2	○ *3
Air/Water button	○	○ *1	○	○	○
Suction button	○	○ *1	○	○	○
Biopsy forceps	○	○	○	-	○
Water tank	○	○	○	○	×
Mouthpiece	○	○	○	○	○
Distal end cap	○	○	×	○	○
Cleaning brush	○	○	×	○	○
J piping	○	○	○	○	○
Forceps valve	○	○	○	○	○
Carrying case	×	×	×	×	×
Protective cap	○	○	×	○	×
Cleaning adapter	○	×	×	○	×
Distal end hood	○	○	○	○	○
Cap check ring	○	○	×	○	○

*1: Use the ultrasonic cleaning unit specialized for Endoscope.

*2: Follow conditions of disinfection (Section 9.2).

*3: Follow conditions of gas sterilization (Section 10.1).

Questions? Contact FDA/CDRH/OCE/DID at CDRH-FOISTATUS@fda.hhs.gov or 301-796-8118

Record processed under FOIA #2015-10057 7/7/16

10.2 EOG (Ethylene Oxide Gas) Sterilization

CAUTION

Temperature and pressure changes may break the bending portion.
Before applying EOG sterilization, install the ventilation adapter.

Liquid may enter the Endoscope and cause damage to it.
Remove the ventilation adapter after aeration.

<Preparation>

(1) Remove air/water button, suction button, forceps valve and distal end cap from Endoscope.
Discard the removed forceps valve.

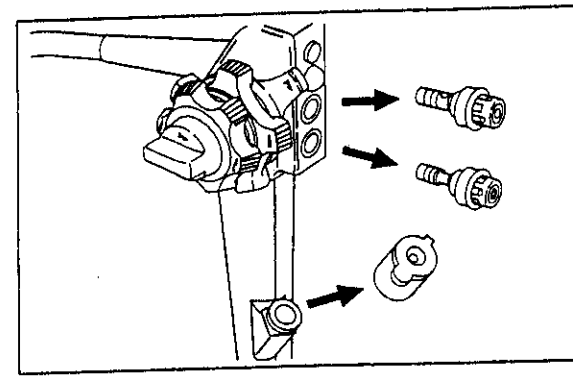

(2) Attach cleaning adapter to Endoscope.

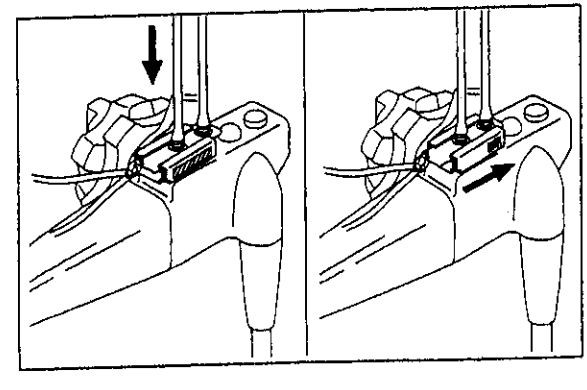

(3) Send ethanol of 70% into air/water supply, suction and water jet channels of Endoscope to drain them.

(4) Using a syringe, feed air into the air/water supply, suction and water jet channels of the Endoscope to dry ethanol from the channel.

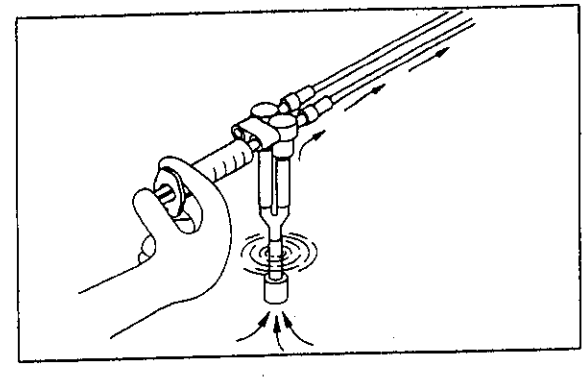

Questions? Contact FDA/CDRH/OCE/DID at CDRH-FOISTATUS@fda.hhs.gov or 301-796-8118

Record processed under FOIA #2015-10057 7/7/16

<Drying the Air/Water Supply Channel>

(1) Remove the protective cap from the end of the EVE connector.

(2) Clean the end of the EVE connector with dry ganze.

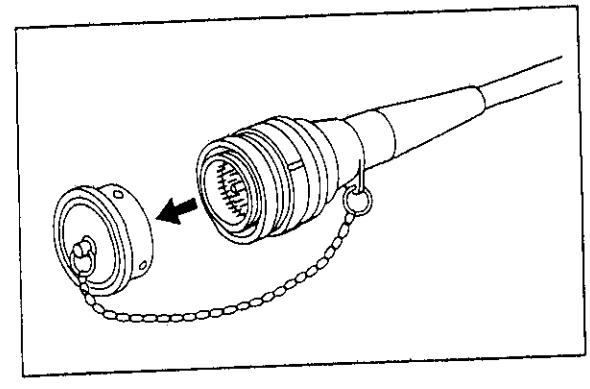

(3) Connect LG connector to the light source.

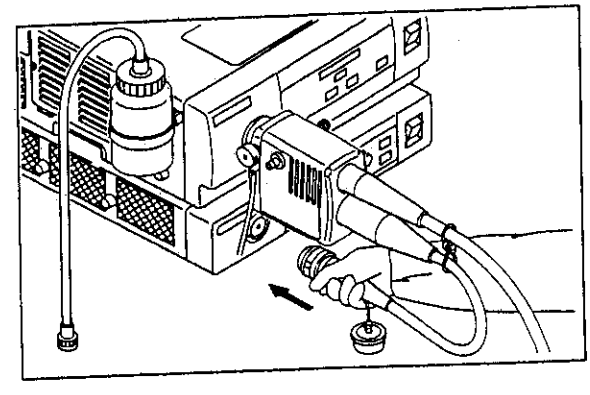

(4) Attach a syringe to the air/ water channel side of the cleaning adaptor.

(5) Turn on the power supply of the light source equipment and operate the air supply pump for 10 minutes to dry the inside of the channel.

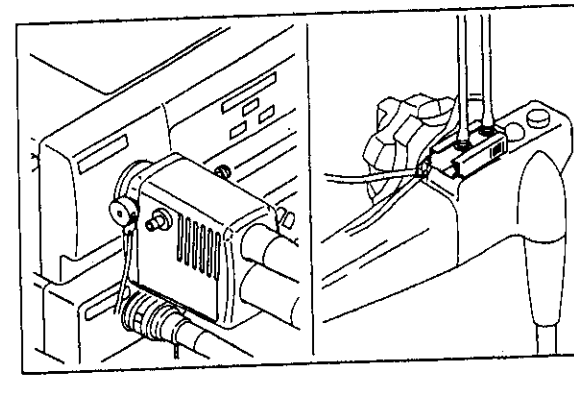

<Drying the Suction Channel>

(1) Connect tube from suction unit to suction connector of Endoscope.

(2) Attach a syringe to suction channel side of the cleaning adaptor.

(3) Turn on the power supply of the suction unit and dry the inside of the tube for 10 minutes.

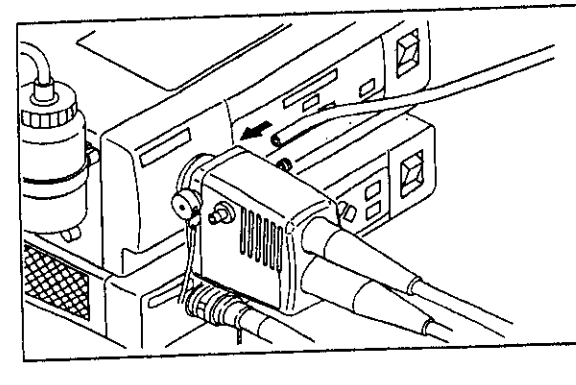

Questions? Contact FDA/CDRH/OCE/DID at CDRH-FOISTATUS@fda.hhs.gov or 301-796-8118

Record processed under FOIA #2015-10057 7/7/16

<Gas Sterilization>

(1) Remove cleaning adapter from Endoscope.

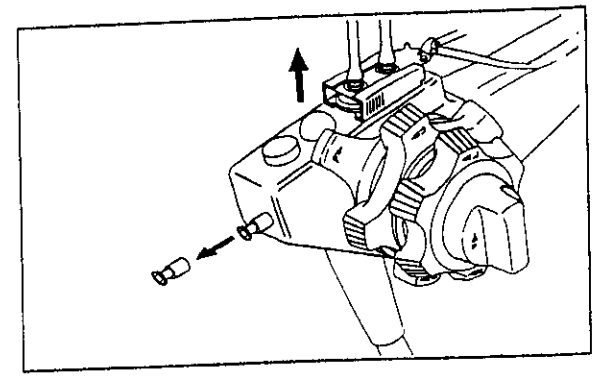

(2) Connect ventilation adapter to ventilation connector in LG connector of Endoscope.

Ventilation adapter connects with outside air. This prevents inside of Endoscope from developing high pressure.

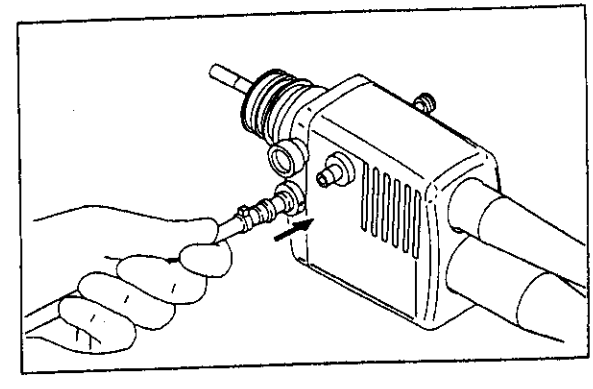

(3) Put Endoscope in EOG sterilizer together with air/water button, suction button and distal end cap.

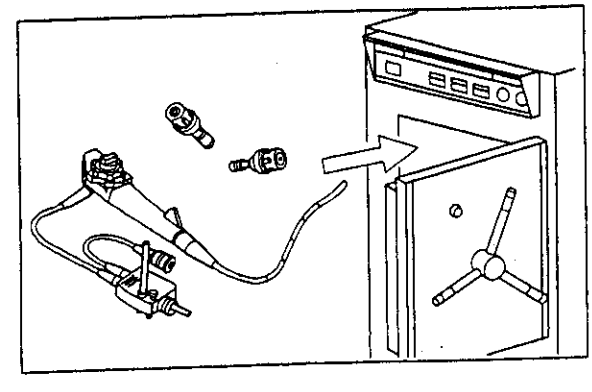

(4) Sterilize instruments, following the operating procedure of EOG sterilizer.

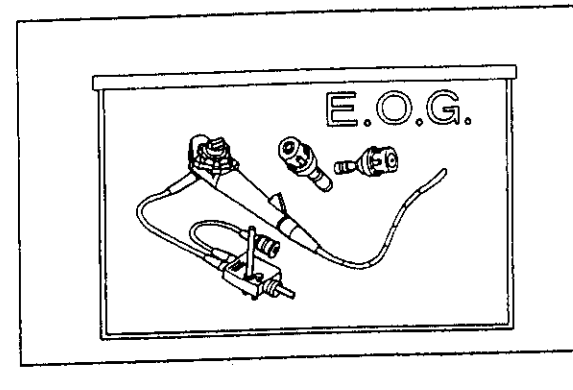

Questions? Contact FDA/CDRH/OCE/DID at CDRH-FOISTATUS@fda.hhs.gov or 301-796-8118

Record processed under FOIA #2015-10057 7/7/16

(5) Sterilize instruments for a specified time, and aerate them according to operating procedure of EOG sterilizer.

Temperature	Time
50 °C	12 hours
Room Temperature	7 days

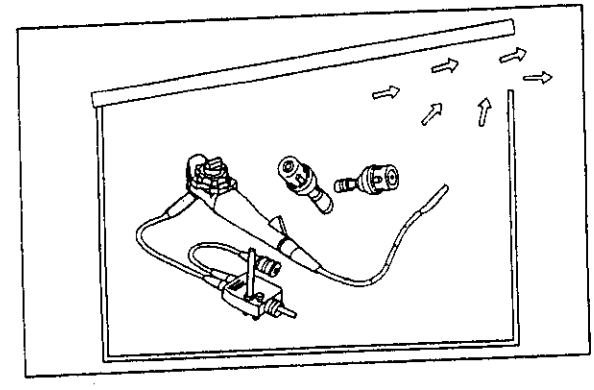

(6) When aeration is over, remove the ventilation adapter.

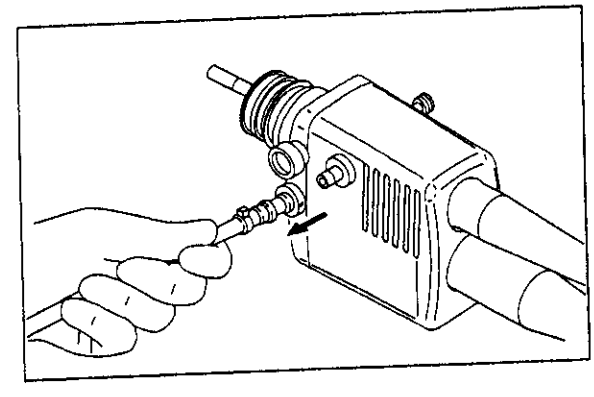

Questions? Contact FDA/CDRH/OCE/DID at CDRH-FOISTATUS@fda.hhs.gov or 301-796-8118

Record processed under FOIA #2015-10057 7/7/16

Questions? Contact FDA/CDRH/OCE/DID at CDRH-FOISTATUS@fda.hhs.gov or 301-796-8118

Record processed under FOIA #2015-10057 7/7/16

Chapter 11 Storage

This chapter describes the method and conditions of storage.

Questions? Contact FDA/CDRH/OCE/DID at CDRH-FOISTATUS@fda.hhs.gov or 301-796-8118

Record processed under FOIA #2015-10057 7/7/16

Chapter 11 Storage

⚠ WARNING

Storage of Endoscope in a carrying case may cause infection.
Do not store Endoscope in a carrying case.

CAUTION

Non-compliance may result in failure.
Do not store Endoscope in locations that do not satisfy the storage conditions.

Store Endoscope after disinfection or gas sterilization. Store it in a location that satisfies the following conditions.

Storage Conditions

Temperature	: 10 to 40°C
Humidity	: Dry
Pressure	: 70 to 106 kPa (within range of atmospheric pressure)
Location	: Clean and not exposed to direct sunlight.
State of Endoscope	: Straight, rather than bent, state Location not affected by external force. Hung with control portion up.

Equipment will wear and degrade after repeated use for a long time period. Have it checked by specialists once every six months or once every 100 cases. Also, if there is anything wrong with equipment, have it checked similarly.

Questions? Contact FDA/CDRH/OCE/DID at CDRH-FOISTATUS@fda.hhs.gov or 301-796-8118

Record processed under FOIA #2015-10057 7/7/16

Index

<A>
Aeration 10-7
Air tightness test 8-10
Air/water button 8-23
Autoclaving 9-2

<B>
Biopsy forceps 8-20

<C>
Cannulation tube 8-21
Cap check ring 8-25
Caution 2, 4
Chemical disinfeciton 9-2
Cleaning adapter 8-15
Cleaning brush 8-26

<D>
Detergente enzimatico liquido 8-3
Distal end cap 8-25
Distal end hood 8-24

<E>
EOG 10-4
Ethylene oxide gas 10-4
EVE connector 8-9

<F>
Forceps valve 8-11

<G>
Gas sterilization 10-2
Glutaraldehyde 9-3

<I>
Insertion adaptor 8-12

<J>
J piping 8-12

<M>
Mouthpiece 8-22

<N>
Neutral detergent 8-3

<O>
Ortho-phthalaldehyde 9-3

<S>
Storage 11-2
Suction button 8-23

<U>
Ultrasonic cleaning 9-3

<V>
Ventilation adapter 10-6
Ventilation connector 8-10

<W>
Warning 2, 4
Washing 8-2

Questions? Contact FDA/CDRH/OCE/DID at CDRH-FOISTATUS@fda.hhs.gov or 301-796-8118

Record processed under FOIA #2015-10057 7/7/16

FUJINON

manufacturer
FUJI PHOTO OPTICAL CO.,LTD.
1-324 UETAKE-CHO, KITA-KU, SAITAMA-SHI, SAITAMA 331-9624, JAPAN
TEL : 81-48-668-2153 FAX : 81-48-668-1570

represented in the North America by
FUJINON INC.
10 HIGH POINT DRIVE, WAYNE, NJ 07470, U.S.A.
TEL : 1-973-633-5600 FAX : 1-973-633-8818

represented in the EU, Middle East and Africa by
FUJINON (EUROPE) GmbH
HALSKESTRASSE 4,47877 WILLICH, GERMANY
TEL : 49-2154-924-0 FAX : 49-2154-924-290

represented in the South East Asia by
FUJI KOKI SINGAPORE PTE. LTD.
BLK 211 HENDERSON ROAD, #10-04 HENDERSON
INDUSTRIAL PARK, SINGAPORE, 159552
TEL : 65-6276-4988 FAX : 65-6276-6911

represented in the Oceania by
F.P. FOCUSING PTY. LTD.
UNIT-18, 52 HOLKER STREET, SILVERWATER
N.S.W. 2128, AUSTRALIA
TEL : 61-2-9748-2744 FAX : 61-2-9748-2428

FG2014 Questions? Contact FDA/CDRH/OCE/DID at CDRH-FOISTATUS@fda.hhs.gov or 301-796-8118

Record processed under FOIA #2015-10057 7/7/16

LABELING LAYOUT

製品名称：電子内視鏡ED-450XT5
MODEL NAME:ELECTRONIC VIDEO ENDOSCOPE ED-450XT5

1．ラベリングチャート LABELING CHART

本機特有のラベルリング及び共通ラベリングについては下図に示す項，図番を参照のこと．
共通ラベリングレイアウトは最新版を参照のこと．

Refer to the sub clause and labeling layout number shown in the figure below with regard to a labeling and a common labeling to this endoscope.The labeling layouts refer to the latest edition.

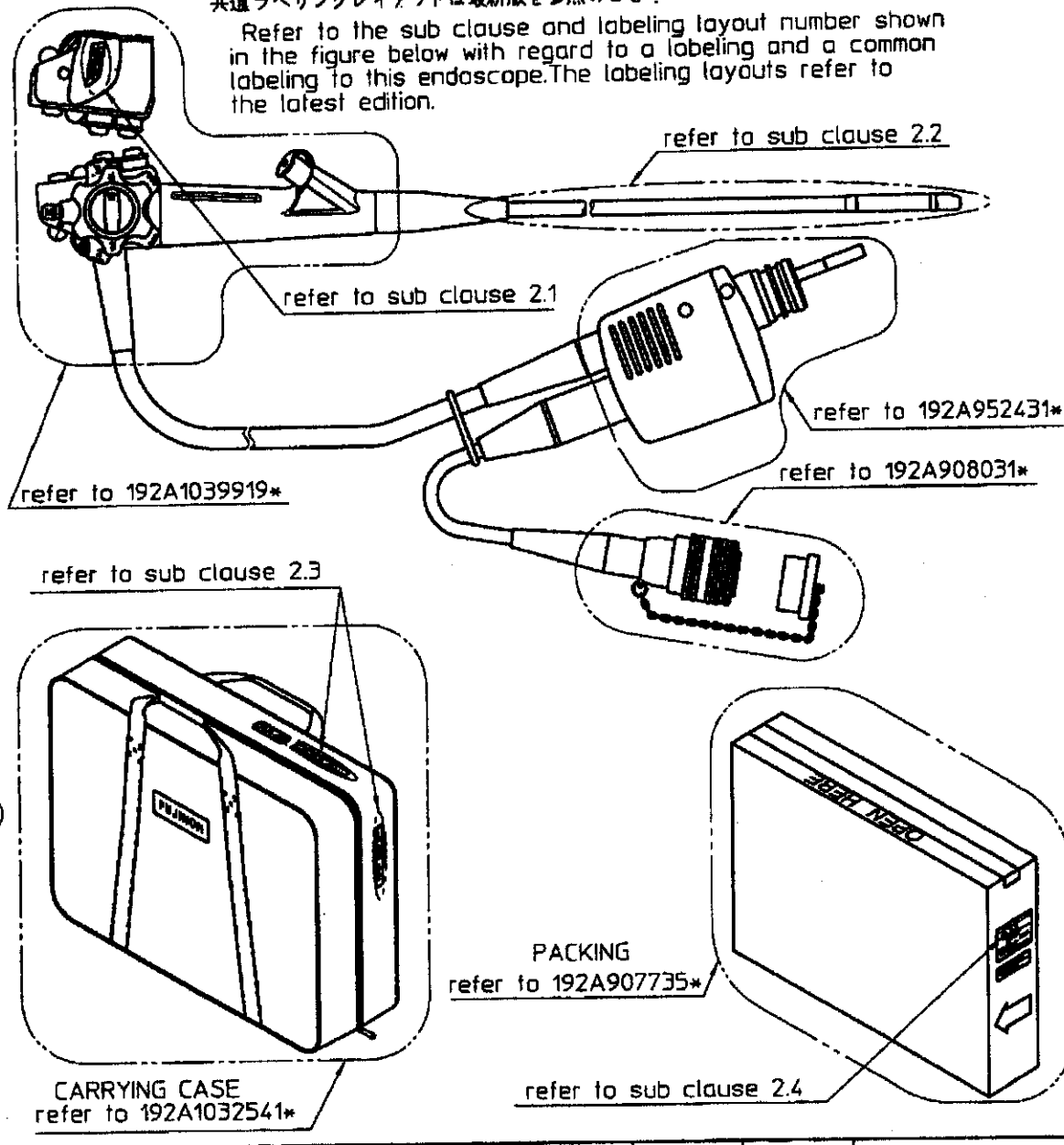

記号/SYM	改訂内容/DESCRIPTION	日付/DATE	承認/APPD
X△			
X△			
X△			
X△			
X△	新規出図SP0312-Z502	H15.12.16	

承認/APPD	審査/CHK	検図/CHK	設計/DSGN
15.12.24 高野	15.12.24 中村	15.12.17 小見	15.12.16 樋野

機種/USED ON	名称/TITLE	図番/DWG No.
FD94A	LABELING LAYOUT ラベリングレイアウト	1/3 192A10834680

SFR675

SP905-J006

TD

720

Questions? Contact FDA/CDRH/OCE/DID at CDRH-FOISTATUS@fda.hhs.gov or 301-796-8118

Record processed under FOIA #2015-10057 7/7/16

2. 表示 LABELING

No.	表示内容 DESCRIPTION	色 COLOR
1	製品名称 MODEL NAME FUJINON ED-450XT 5	地：銀色，文字：黒色 ライン：橙色 ground:silver character:black line:orange
2	挿入長指標 SCALE MARK 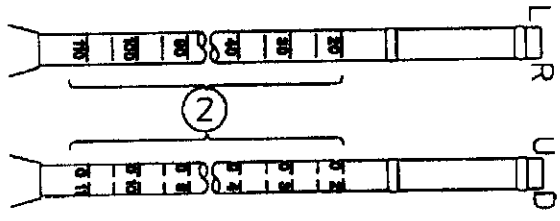 注）先端より200mm~1100mmまで50mm間隔でライン． 文字は20,30,40,50,60,70,80,90,100,110 文字部のラインは，UP，DOWNの各方向にある NOTE) There are the line-markers with every fifty milimeters from 200 to 1100 milimeters from the destal end. The numbers are 20,30,40,50,60,70,80,90,100,110. Every number's line marker is put on both sides of with up/down direction.	地：黒色，文字：白色 ライン：白色 ground:black character:white line:white
3	トランク銘板 NAME PLATE ON THE TRUNK FUJINON ED-450XT5	地：黒色，文字：白色 ライン：橙色 ground:black character:white line:orange
4	製品名称 MODEL NAME ED-450XT5	地：白色，文字：黒色 ground:white character:black

記号/SYM	改訂事項/DESCRIPTION	日付/DATE	承認/APPD
×△			
×△			
×△			
×△			
×△	新規出図SP0312-Z502	H15.12.16	

承認/APPD	事業/CHK	検図/CHK	設計/DSGN
15.12.24	15.12.19	15.12.17	15.12.16
吉野	中村	小見	頭野

使用/USED ON. FD94A

名称/TITLE LABELING LAYOUT ラベリングレイアウト

2/3

図番/DWG No. 192A1083468

SFR675 SP905-J006

Questions? Contact FDA/CDRH/OCE/DID at CDRH-FOISTATUS@fda.hhs.gov or 301-796-8118

Record processed under FOIA #2015-10057 7/7/16

3．標準附属品のラベリングレイアウトリスト
LIST OF THE STANDARD ACCESSORIE'S LABELING LAYOUT

No	付属品名称 Name of accessories	ラベリングレイアウト番号 labeling layout number
1	鉗子（BF2418SF） forceps	192A914468*
2	洗浄ブラシ（WB4321FW2） cleaning brush	192A1032972*
3	造影チューブ（T1720ZS） Cannulation tube	192A908035*
4	洗浄アダプター Cleaning adapter	192A1039871*
5	鉗子栓ゴム Forceps valve	192A1039875*
6	シリコンオイル Silicone oil	192A884348*
7	レンズクリーナー Lens cleaner	192A884354*
8	通気アダプター Ventilation adapter	192A884355*
	マウスピース Mouthpiece	192A884352*

付属品のラベリングレイアウトは最新版を参照のこと
The standard accessorie's labeling layouts refer to the latest edition.

×△				承認/APPD	審査/CHK	検図/CHK	設計/DSGN	名称/TITLE LABELING LAYOUT ラベリングレイアウト
×△				15.12.24 高野	15.12.24 中村	15.12.17 小見	15.12.16 樋野	
×△								
×△								3/3 図番/DWG No. 192A1083468*
×△	新規出図SP0312-Z502	H15.12.16		使用先/USED ON	FD94A			
記号/SYM	改訂内容/DESCRIPTION	日付/DATE	承認/APPD					

SFR675 SP905-J006

TD

222

Questions? Contact FDA/CDRH/OCE/DID at CDRH-FOISTATUS@fda.hhs.gov or 301-796-8118

Record processed under FOIA #2015-10057 7/7/16

LABELING LAYOUT

製品名称：電子内視鏡ED-250XT5
MODEL NAME:ELECTRONIC VIDEO ENDOSCOPE ED-250XT5

1．ラベリングチャート LABELING CHART

本機特有のラベルリング及び共通ラベリングについては下図に示す項，図番を参照のこと．
共通ラベリングレイアウトは最新版を参照のこと．

Refer to the sub clause and labeling layout number shown in the figure below with regard to a labeling and a common labeling to this endoscope.The labeling layouts refer to the latest edition.

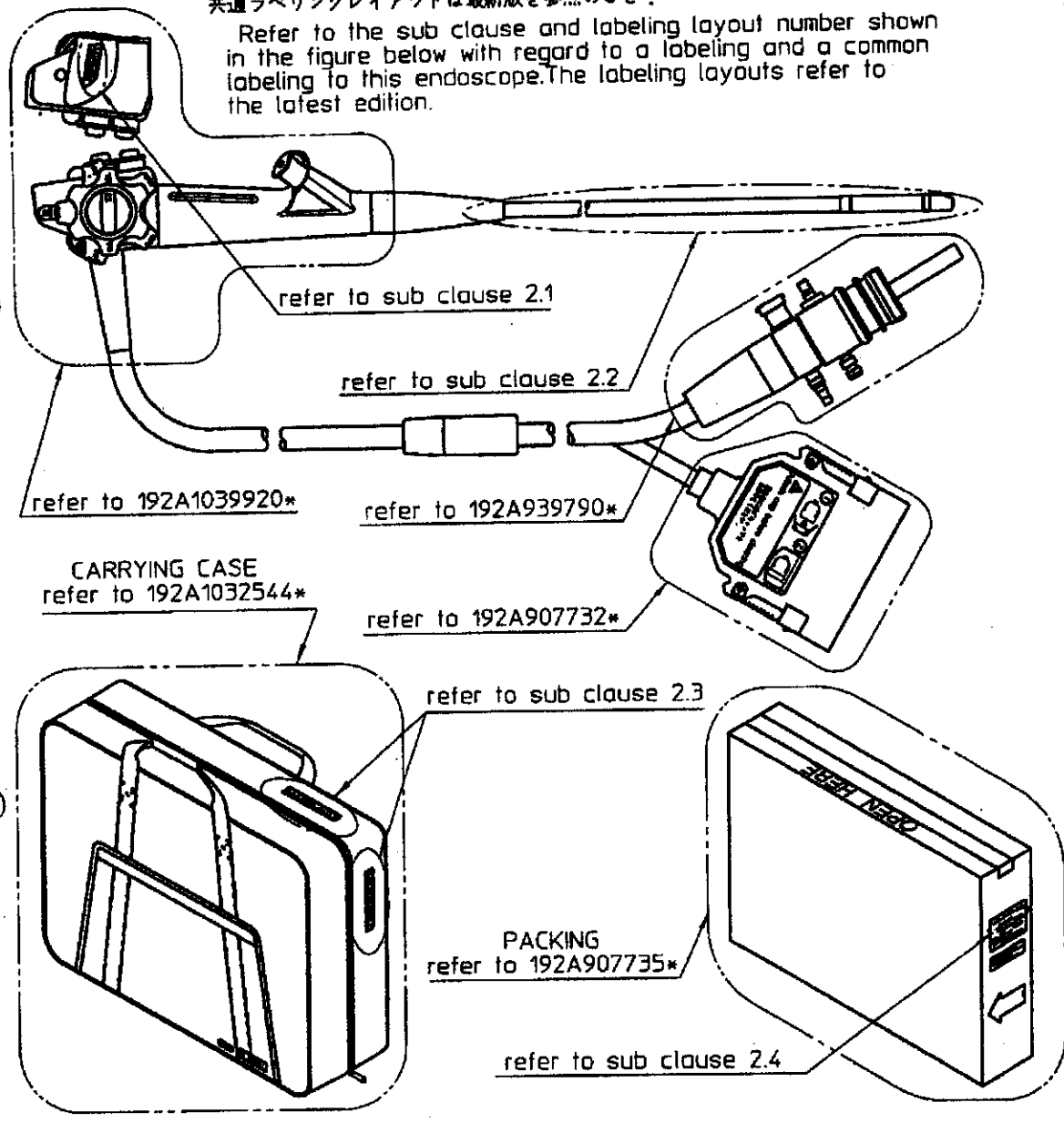

記号/SYM	改訂内容/DESCRIPTION	日付/DATE	承認/APPD
X△			
X△			
X△			
X△			
X△	新規出図SP0312-Z503	H15.12.16	

承認/APPD	事業/CHK	検図/CHK	設計/DSGN
15.12.24	15.12.24 中村	15.12.17 小見	15.12.16 樋野

名称/TITLE
LABELING LAYOUT
ラベリングレイアウト

1/3

図番/DWG No.
192A10834690

適用/USED ON: FD95A

SFR675

SP905-J006

TD

223

Questions? Contact FDA/CDRH/OCE/DID at CDRH-FOISTATUS@fda.hhs.gov or 301-796-8118

Record processed under FOIA #2015-10057 7/7/16

2．表示 LABELING

No.	表示内容 DESCRIPTION	色 COLOR
1	製品名称 MODEL NAME FUJINON ミルズ® ED-250XT5	地：銀色，文字：黒色 ライン：青色 ground:silver character:black line:blue
2	挿入長指標 SCALE MARK 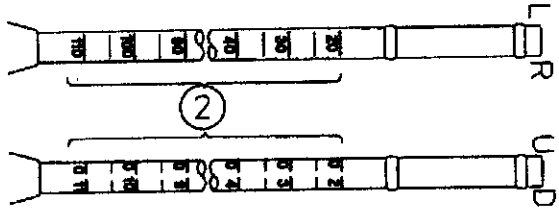 注）先端より200mm~1100mmまで50mm間隔でライン． 文字は20,30,40,50,60,70,80,90,100,110 文字部のラインは，UP，DOWNの各方向にある NOTE) There are the line-markers with every fifty milimeters from 200 to 1100 milimeters from the destal end. The numbers are 20,30,40,50,60,70,80,90,100,110. Every number's line marker is put on both sides of with up/down direction.	地：黒色，文字：白色 ライン：白色 ground:black character:white line:white
3	トランク銘板 NAME PLATE ON THE TRUNK FUJINON ミルズ® ED-250XT5	地：黒色，文字：白色 ライン：青色 ground:black character:white line:blue
4	製品名称 MODEL NAME ED-250XT5	地：白色，文字：黒色 ground:white character:black

記号/SYM	改訂内容/DESCRIPTION	日付/DATE	承認/APPD
X△			
X△			
X△			
X△			
X△	新規出図SP0312-2503	H15.12.16	

承認/APPD	事業/CHK	検図/CHK	設計/DSGN
15.12.24 高野	15.12.19 中村	15.12.17 小見	15.12.16 樋野

使用/USED ON: FD95A

名称/TITLE: LABELING LAYOUT ラベリングレイアウト

図番/DWG No. 2/3 192A1083469※

SFR675 SP905-J006

TD

Questions? Contact FDA/CDRH/OCE/DID at CDRH-FOISTATUS@fda.hhs.gov or 301-796-8118

Record processed under FOIA #2015-10057 7/7/16

3．標準附属品のラベリングレイアウトリスト
LIST OF THE STANDARD ACCESSORIE'S LABELING LAYOUT

No	付属品名称 Name of accessories	ラベリングレイアウト番号 labeling layout number
1	鉗子（BF2418SF） Forceps	192A914468*
2	洗浄ブラシ（WB4321FW2） Cleaning brush	192A1032972*
3	造影チューブ（T1720ZS） Cannulation tube	192A908035*
4	洗浄アダプター Cleaning adapter	192A1039871*
5	鉗子栓ゴム Forceps valve	192A1039875*
6	シリコンオイル Silicone oil	192A884348*
7	レンズクリーナー Lens cleaner	192A884354*
8	通気アダプター Ventilation adapter	192A884355*
	マウスピース Mouthpiece	192A884352*

付属品のラベリングレイアウトは最新版を参照のこと
The standard accessorie's labeling layouts refer to the latest edition.

×△				承認/APPD	審査/CHK	検図/CHK	設計/DSGN	名称/TITLE LABELING LAYOUT ラベリングレイアウト
×△				15.12.24 宮野	15.12.24 中村	15.12.17 小見	15.12.16 樋野	
×△								
×△								
×△	新規出図SP0312-Z503	H15.12.16						3/3 図番/DWG No. 192A1083469*
記号/SYM	改訂内容/DESCRIPTION	日付/DATE	承認/APPD	適用/USED ON.	FD95A			

SFR675 SP905-J006

Questions? Contact FDA/CDRH/OCE/DID at CDRH-FOISTATUS@fda.hhs.gov or 301-796-8118

Records released under FOIA #2015-10047

FUJINON ENDOSCOPY SYSTEMS

COMPANY PROFILE

G-5 ENDOSCOPY

The Latest in Endoscopic Technologies and Personalized Services for Today's Healthcare Professionals

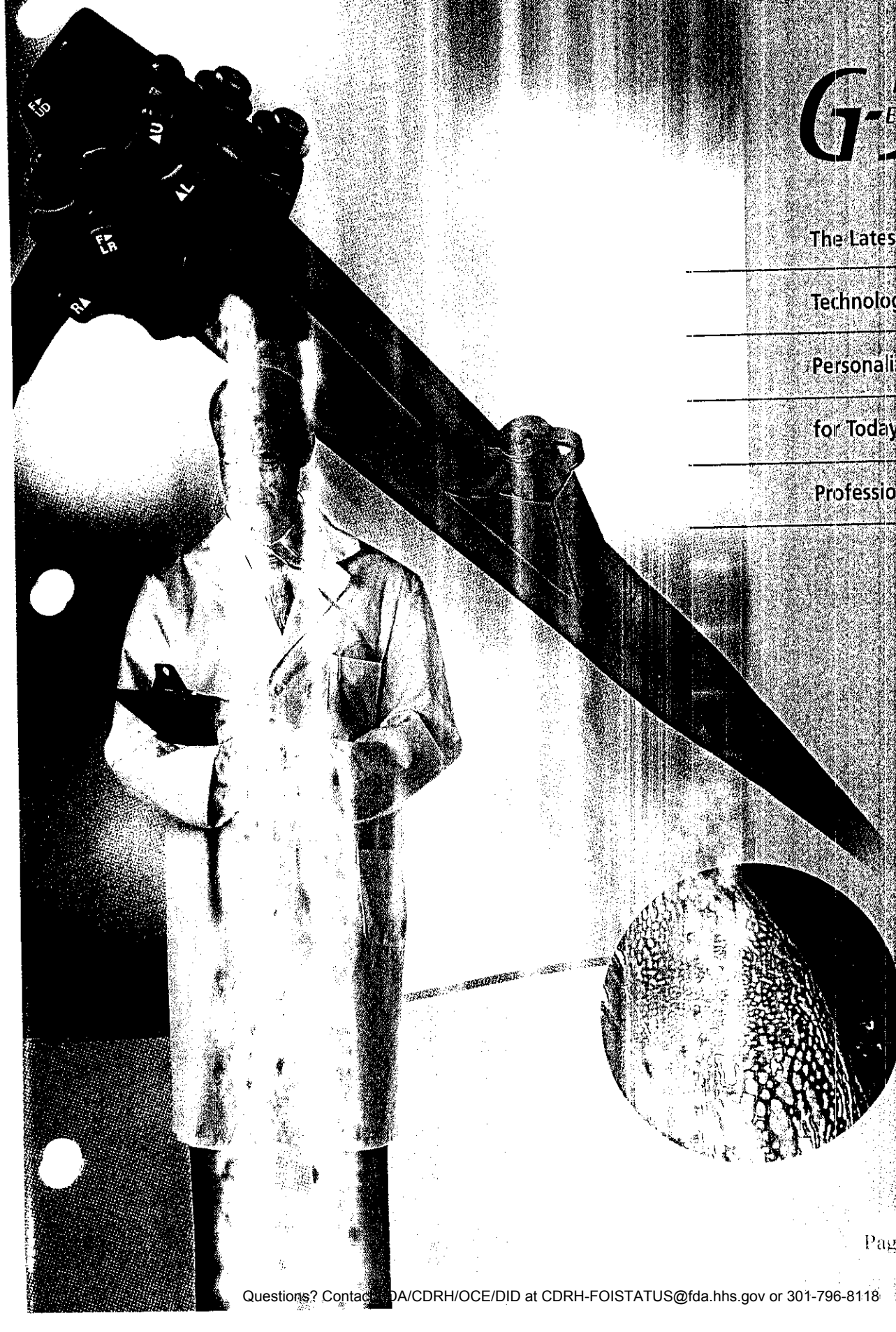

Questions? Contact FDA/CDRH/OCE/DID at CDRH-FOISTATUS@fda.hhs.gov or 301-796-8118

Record processed under FOIA #2015-10057 7/7/16

Flexible Endoscopy

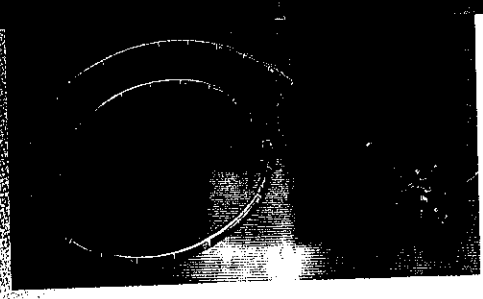

Less physician fatigue
= **more procedures**

Reduced time to cecum
= **faster procedures**

Reduced cleaning time
= **greater equipment productivity**

Personalized service
= **consistent equipment availability**

Flexible financing
= **best investment value**

At Fujinon, flexible endoscopy is more than a procedural description. It is a way of doing business.

Our passion is providing endoscopy solutions of greatest value to healthcare professionals. Value in today's marketplace encompasses outstanding products and services at prices that allow professionals to remain competitive.

Our obsession is flexibility in our approach to customer solutions. Rigid solutions cannot adequately serve the diverse needs of endoscopy professionals. Only through a business model that places customers at the top and demands flexibility in our operations can we serve this dynamic market.

In products, services and business approach Fujinon is truly a leader in flexible endoscopy.

Changing the Scope of Endoscopy

Historically, the rules of the endoscopy market have been controlled and dictated. Many healthcare professionals have been taught these rules by a single source. Product designs have been fixed, prices high, financing and residual values one-sided, trade-in values unfair, repair turn around times slow, and independent service organizations shunned.

Some vendors continue to pursue greater control for their own benefit and at the expense of long-term customer interests. Discounts, packaged offerings, and consulting services are often loss leaders to lock in customers on long term deals that benefit the vendor.

Fujinon has changed the rules. In our world, the customer is on top. Our role is that of a fully integrated solution provider to each unique customer. No one company can develop and deliver best-in-class comprehensive solutions at competitive pricing for endoscopes, software, peripheral equipment, financing, consulting and more. This is simply impossible and ultimately sacrifices quality, flexibility and customer costs.

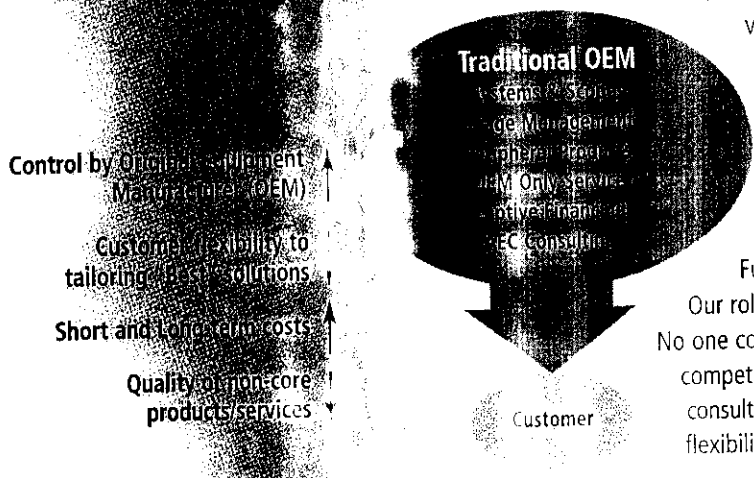

G-[illegible] Endoscopy™ Solutions

Customer flexibility to tailor "Best" core solutions ↑

Short and Long-term costs ↓

Quality of all products and systems ↑

Return on customer investment ↑

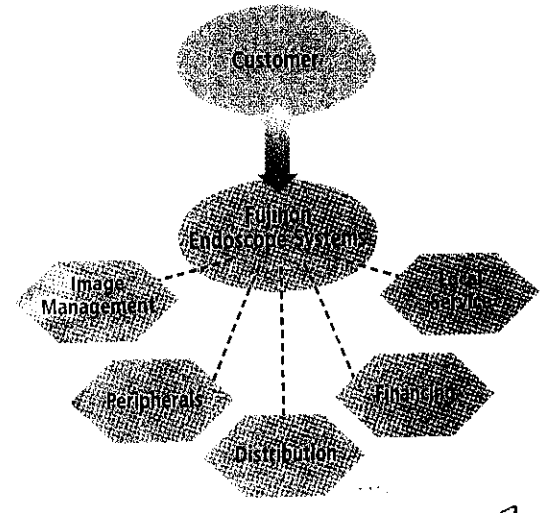

Questions? Contact FDA/CDRH/OCE/DID at CDRH-FOISTATUS@fda.hhs.gov or 301-796-8118

Record processed under FOIA #2015-10057 7/7/16

We excel at developing and delivering the highest quality and greatest value endoscopes and processor systems. This is our core technology. Then we comprehensively integrate solutions from the world's foremost suppliers of complementary products and services to give our customers the best overall package at the most competitive price over the life of the product.

Overview of G-5 Endoscopy™

G-5 Endoscopy™ integrates product technologies and services to provide the most comprehensive and customer-focused endoscopic solutions. Product technologies include our latest G-5™ Endoscopes, designed to increase procedure speed and reduce equipment downtime, with less physician fatigue. Our two-tier processor platforms support the spectrum of professional healthcare requirements from office to large institutional settings. Strategic partnerships with image management and peripheral system specialists compliment Fujinon core technologies with best-in-class products. Integrated services include a customer choice of Fujinon OEM or Fujinon certified local service organizations all supported by the most customer driven flexible financing options.

G-5™ Endoscope Systems

Ergonomically designed G-5™ Endoscopes increase productivity and reduce fatigue. Control section diameter, weight, angulation control positions, turning ratios and braking mechanisms have all been engineered to allow endoscopists to perform more procedures with greater ease. Advanced polymeric materials have been incorporated to increase product durability and working components, including valves, have been designed to facilitate cleaning and reduce equipment downtime.

G-5™ Endoscopes are compatible with two completely unique high-performance video processors. This provides healthcare professionals with the optimal selection of performance and value for various settings ranging from rural outpatient facilities to large teaching and research institutions. The compact single unit, EPX-2200 light source and processor system offers extremely high quality imaging coupled with other critical features to perform effectively and efficiently in all clinical settings, while optimizing investment value. The Σ400 Series offers a fully digital endoscope light source and processor; unsurpassed image resolution, clarity and color replication; and extended product offerings for high-resolution, high magnification and all other therapeutic clinical applications.

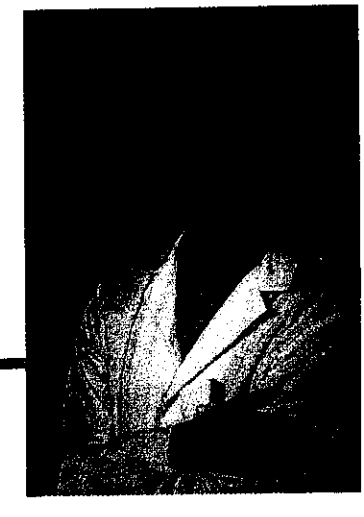

Image Management - Fujinon's best-in-class computer technology and storage capabilities allow for easier and faster documentation of procedures both verbally and visually. Through our partnerships with premier leaders in system software we maintain the ingenuity of independent software programming and provide open architecture that allows for system recognition of a wide range of endoscopic equipment. Our goal is to offer the most advanced systems at the best value possible.

Peripheral Products - Fujinon provides a comprehensive list of peripheral products to satisfy every aspect of customer requirements. In doing so, Fujinon has developed partnerships with the leading organizations to provide high-quality, cost effective monitors, mavigraphs, video recorders, digital storage devices, fluid management systems, accessories and more.

Questions? Contact FDA/CDRH/OCE/DID at CDRH-FOISTATUS@fda.hhs.gov or 301-796-8118

Record processed under FOIA #2015-10057 7/7/16

Financing - Flexible financing is one of the most important issues to customers in today's medical climate. Equipment needs have increased and financing must allow the customer to maintain a steady cash flow based on their fluctuating procedural count. We have partnered with leading capital financing institutions that provide customers the most aggressive financing options without the extra costs of having "captive" financing under the Fujinon name. Financing options include $1 Purchase, Fair Market Value, and Price-Per-Procedure (P^3) and other especially tailored solutions to meet unique customer needs.

Service – Our unique approach to service is entirely customer driven, with quality and choice at the forefront. OEM replacement parts and service have set the benchmark in the industry. Our OEM service department continues to offer the highest quality service available. However, local independent service, as provided by many third parties, offers quick turnaround times and relationships that are highly valued to many customers. We understand that independent third parties will always be an integral part of the endoscopic service market and justifiably so. As such, we work hand-in-hand with independent repair organizations to ensure quality and consistency equal to that provided by our own professional repair team. Our Certified Service Partners are fully supported by Fujinon to carry out all over-haul and minor scope repairs. These Partners are located throughout the United States and have been carefully selected based upon their industry reputation and dedication to customer service. They undergo intense, certified Fujinon service training and must meet all of our internal requirements. With these Partners our customers get local service with genuine Fujinon parts assuring, unlike other OEM manufactures, that a Fujinon scope will remain a genuine Fujinon scope throughout its product life.

Distribution – Fujinon's flexible, customer-focused, endoscopy platform has attracted the industry's leading sales professionals who value comprehensive solutions and long-term customer relationships. The most capable sales distribution teams throughout North America represent our products and packages. These consultants underpin our advanced endoscope technologies and best-in-class peripheral and service solutions, and provide our customers with long-term support and value. Experience and customer loyalty are core attributes of our sales team and make them unique to the field of endoscopy. The result is consistent delivery of solutions that exceed customer expectations.

About Fujinon

Fujinon, Inc. is a wholly owned subsidiary of Fuji Photo Optical Co., LTD of Saitama City, Japan, one of 165 global subsidiaries of Fuji Photo Film Co., LTD, a world leader in imaging technology. Fujinon, Inc. was established in Wayne, New Jersey in December of 1973 as the sole distributor of high-quality lens products for the North American market. The New Jersey based organization is comprised of four divisions: Medical, TV/Broadcast Lens, Industrial, and Binocular. The Medical Division is specifically responsible for the sale of high-resolution, cost effective integrated endoscopic solutions in North America.

FUJINON INC.
10 High Point Drive
Wayne, New Jersey 07470
800.490.0661
www.fujinonendoscopy.com

Questions? Contact FDA/CDRH/OCE/DID at CDRH-FOISTATUS@fda.hhs.gov or 301-796-8118

Record processed under FOIA #2015-10057 7/7/16

ED-400XL

510(k) Premarket Notification Database

Device Classification Name	Endoscope And/Or Accessories
510(K) Number	K944620
Regulation Number	876.1500
Device Name	SERIES 400 GASTROENTEROLOGY SYSTEM
Applicant	MARKS & MURASE 399 Park Ave. New York, NY 10022 4689
Contact	Gary A Adler
Product Code	KOG
Date Received	09/20/1994
Decision Date	04/27/1995
Decision	Substantially Equivalent (SE)
Classification Advisory Committee	Gastroenterology
Review Advisory Committee	Gastroenterology
Statement/Summary/Purged Status	Statement Only
Type	Traditional
Reviewed By Third Party	No

Database Updated 7/06/2004

Questions? Contact FDA/CDRH/OCE/DID at CDRH-FOISTATUS@fda.hhs.gov or 301-796-8118

Record processed under FOIA #2015-10057 7/7/16

ED-200XV

New Search
Back To Search Results

510(k) Premarket Notification Database

Device Classification Name	Endoscope And/Or Accessories
510(K) Number	K944759
Regulation Number	876.1500
Device Name	200 SERIES GASTRO-INTESTINAL VIDEO SYSTEM
Applicant	FUJINON, INC. 10 High Point Dr. Wayne, NJ 07470
Contact	H J Evans
Product Code	KOG
Date Received	09/27/1994
Decision Date	04/11/1995
Decision	Substantially Equivalent (SE)
Classification Advisory Committee	Gastroenterology
Review Advisory Committee	Gastroenterology
Statement/Summary/Purged Status	Statement/Purged 510(K)
Type	Traditional
Reviewed By Third Party	No

Database Updated 7/06/2004

Questions? Contact FDA/CDRH/OCE/DID at CDRH-FOISTATUS@fda.hhs.gov or 301-796-8118

Record processed under FOIA #2015-10057 7/7/16

FUJINON

FUJINON ELECTRONIC VIDEO ENDOSCOPE
EVE 200 SERIES

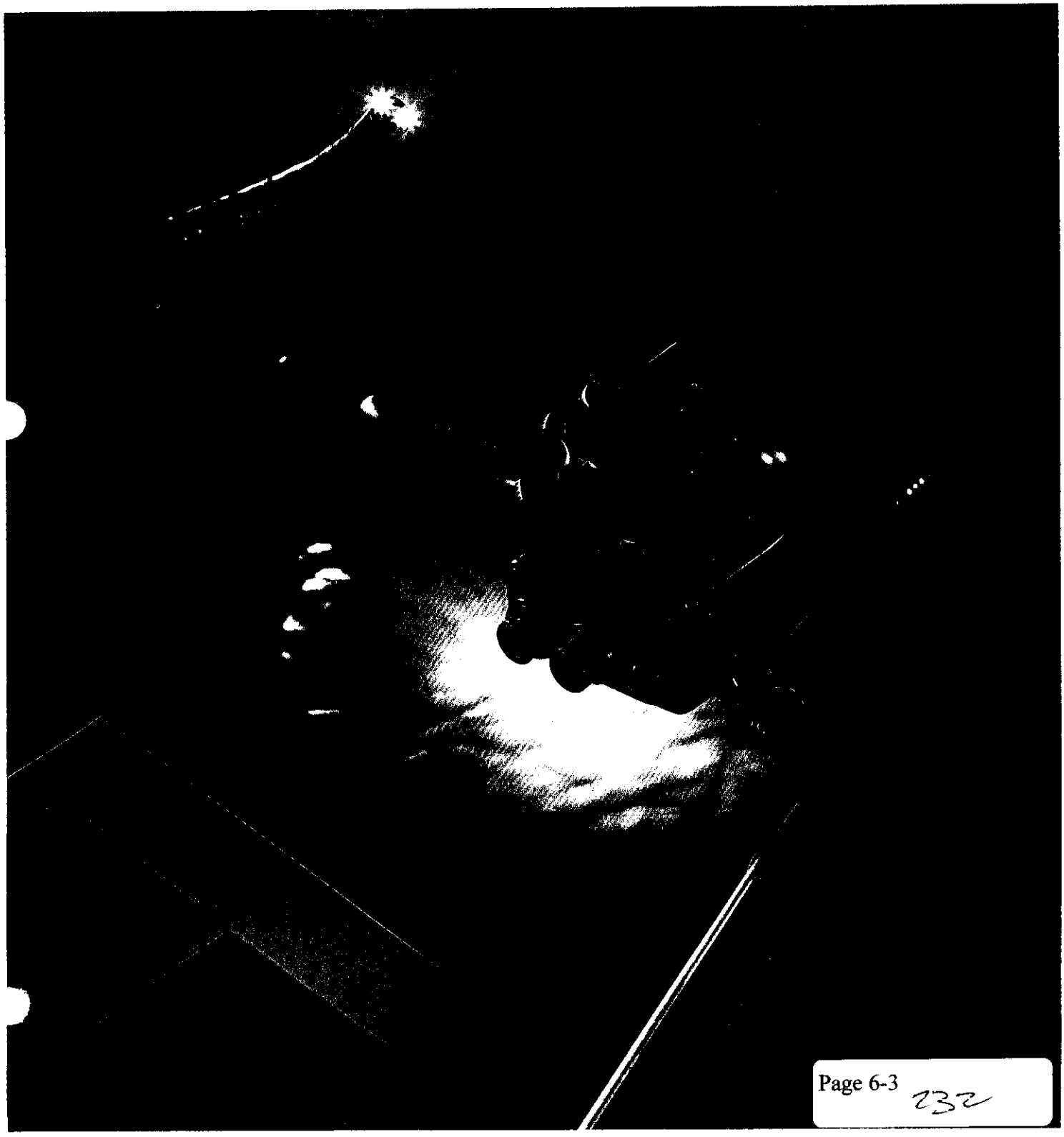

Questions? Contact FDA/CDRH/OCE/DID at CDRH-FOISTATUS@fda.hhs.gov or 301-796-8118

Record processed under FOIA #2015-10057 7/7/16

Our basic EVE video system with many advanced features b
Compact size, ergonomic comfort and high resolution color

A look at the monitor

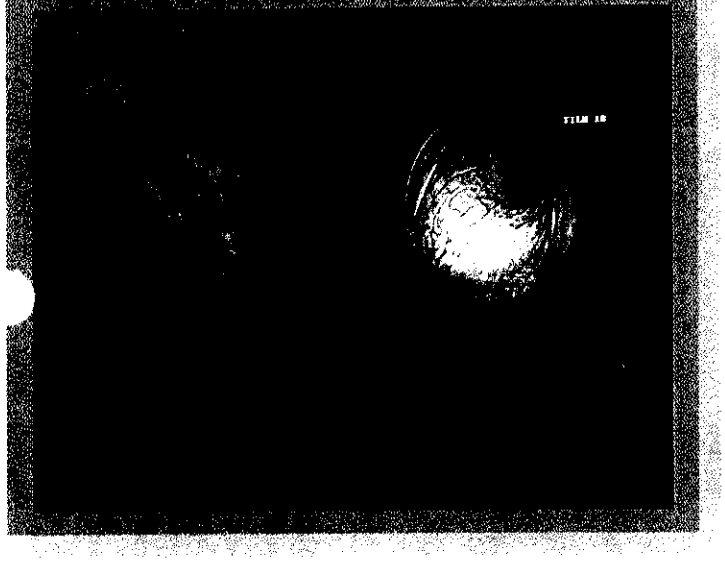

Clear, sharp images with accurate color reproduction

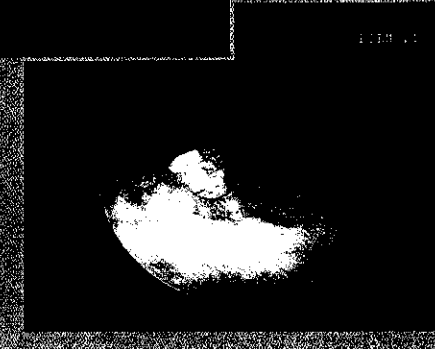

Gastroscope **EG-200FP**

Duodenoscope **ED-200XU**

Colonoscopes **EC-200MR/LR**

The EVE 200 Series Video Endoscopes have been designed for optimum comfort.
The operating section is both compact and lightweight.
Patient comfort is increased with a more rounded, slender tip.
A newly relocated biopsy forceps opening allows easier access during the procedure.
All scopes are easily cleaned and disinfected. The[illegible] of course, fully immersible for manual or automatic cleaning.

	EG-200FP	ED-200XU	EC-200MR/LR
Viewing direction	Forward	Side	Forward
Observation range		5~100mm	
Field of view	120°	90°	120°
Distal end diameter	10.5mm	13.0mm	13.0mm
Flexible section diameter	10.3mm	12.1mm	
Bending capability UP	190°	130°	180°
DOWN	90°	90°	
LEFT	100°		160°
RIGHT		110°	
Forceps channel diameter	2.8mm	3.7mm	3.2mm
Working length	1,100mm	1,250mm	1,330/1,770mm
Total length	1,370mm	1,520mm	1,600/2,040mm

Questions? Contact FDA/CDRH/OCE/DID at CDRH-FOISTATUS@fda.hhs.gov or 301-796-8118

Record processed under FOIA #2015-10057 7/7/16

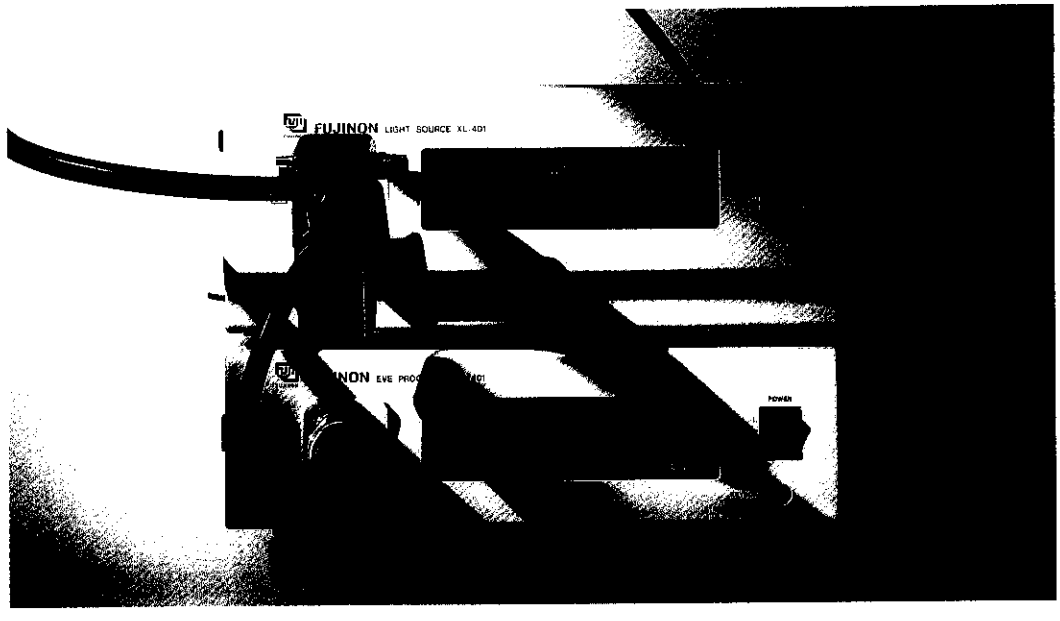

EVE-System 400.

Now take a closer look.

FUJINON

Questions? Contact FDA/CDRH/OCE/DID at CDRH-FOISTATUS@fda.hhs.gov or 301-796-8118

Record processed under FOIA #2015-10057 7/7/16

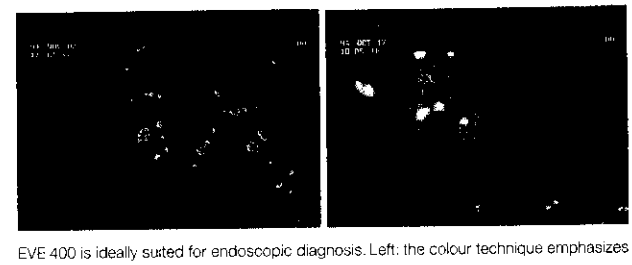

EVE 400 is ideally suited for endoscopic diagnosis. Left: the colour technique emphasizes mucosal textures.

Human engineering at its best: the new EG-400 HR gastroscope.

Like the entire new EVE 400 series, the EG-400 HR combines excellent image quality with convenient design. The flexible section, for instance, is connected to the side of the operating section where it doubles as a convenient thumb-rest. Its handling, the 120 degree viewing angle and optimum illumination make the EG-400 HR the ideal gastroscope for video-based diagnosis.

Durability rules: the new ED-400 XL duodenoscope.

The robust and reliable ED-400 XL is machine desinfectable to ensure short examination intervals. Its slightly retrograde lens facilitates the best positioning of the papilla on the screen. The external diameter is no more than 11.2 mm for minimized patient discomfort during routine examinations. The biopsy channel has a diameter of 2.8 mm and is large enough to permit easy introduction of standard ERCP catheters, as well as standard papillotomes.

Seeing is believing: the EC-400 HM, HL and CM colonoscopes.

The EC-00 HM and HL only differ with regard to their working and overall length. They are ideally suitable for diagnostic colonoscopy, offering an image quality and colour accuracy that can hardly be improved on. The top-of-the range EC-400 CM magnifying colonoscope lets you enlarge individual sections up to 31 times so that even minute differences in mucosal textures can be distinguished clearly on the monitor – true to Fujinon's motto that to see more is to know more.

Questions? Contact FDA/CDRH/OCE/DID at CDRH-FOISTATUS@fda.hhs.gov or 301-796-8118

Record processed under FOI #2015-10057 7/7/16

Specifications	EG-400 HR [1]	ED-400 XL [2]	EC-400 HM [3]
Field of view	120°	90°	120°
Observation range	8–100 mm	5–100 mm	8–100 mm
Viewing direction	forward	sideways, retro 7°	forward
Distal end diameter	11.2 mm	12.0 mm	15.0 mm
Flexible section diameter	10.5 mm	11.2 mm	13.3 mm
Forceps channel diameter	2.8 mm	2.8 mm	3.2 mm
Bending capability Up/Down	190°/90°	130°/90°	180°/180°
Right/Left	100°/100°	110°/90°	160°/160°
Working length	1100 mm	1250 mm	1330 mm
Total length	1400 mm	1550 mm	1630 mm

Specifications	EC-400 HL [4]	EC-400 CM [5]
Field of view	120°	105°
Observation range	8–100 mm	5–20 mm
Viewing direction	forward	forward
Distal end diameter	15.0 mm	15.0 mm
Flexible section diameter	13.3 mm	13.3 mm
Forceps channel diameter	3.2 mm	3.2 mm
Bending capability Up/Down	180°/180°	180°/180°
Right/Left	160°/160°	160°/160°
Working length	1770 mm	1330 mm
Total length	2070 mm	1640 mm

Distal ends	1)	2)	3), 4), 5)
1 = Forceps channel 2 = Light guide 3 = Air/water nozzle 4 = Lens 5 = Water jet nozzle 6 = Forceps elevator	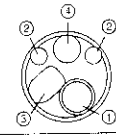	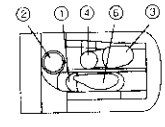	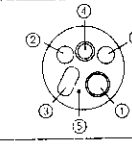

Specifications are subject to change without notice. 1) to 5): All video endoscopes of the 400 series are equipped with zoom function and with microswitches for VCR remote control and freeze frame / hardcopy.

Printed on chlorine-free bleached paper

FUJINON

Questions? Contact FDA/CDRH/OCE/DID at CDRH-FOISTATUS@fda.hhs.gov or 301-796-8118

Record processed under FOIA #2015-10057 7/7/16

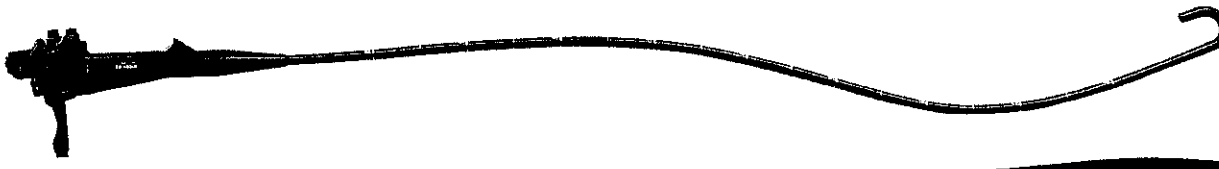

Gastroscope EG-400 HR.

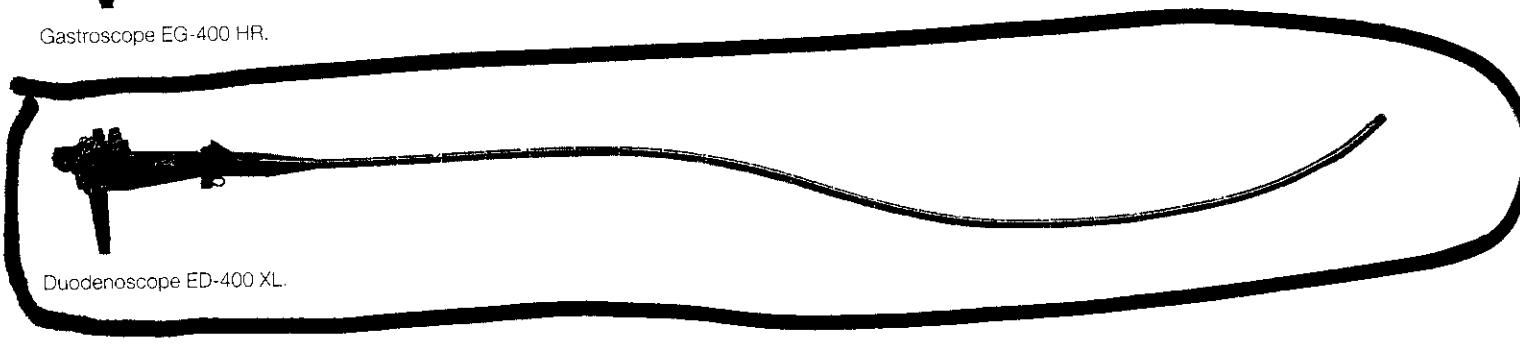

Duodenoscope ED-400 XL.

Colonoscope EC-400 HM.

Questions? Contact FDA/CDRH/OCE/DID at CDRH-FOISTATUS@fda.hhs.gov or 301-796-8118

Record processed under FOIA #2015-10057 7/7/16

510 (k) Summary

Date Prepared [21 CFR 807.92(a)(1)]

July 29, 2004

Submitter's Information [21 CFR 807.92(a)(1)]

Joseph M. Azary
C/o Fujinon Inc.
543 Long Hill Avenue
Shelton, CT. 06484

Azary Technologies has received authorization to submit this 510(k) on behalf of the sponsor Fujinon Inc., 10 High Point Drive, Wayne, NJ 07470, Establishment Registration# 2431293.

Trade Name, Common Name, Classification [21 CFR 807.92(a)(2)]

The device trade names are: Fujinon G5 Duodenoscopes

Common Name: Duodenoscopes

Classification: Class II, 21 CFR 876.1500, FAK

Predicate Device [21 CFR 807.92(a)(3)]

- Fujinon ED-400XL – K944620
- Fujinon ED-200XU – K944759

The G5 changes were described and cleared by FDA in the 510(k) submission for the Fujinon Double Balloon Enteroscopy System – K040048.

This 510(k) captures some minor design changes that have occurred during the evolution of the product line resulting in the G5 family of scopes. Although the changes are believed to be minor, the 510(k) is being submitted to account for "design creep" and to ensure that FDA has the most current information concerning the Fujinon Duodenoscopes.

The subject devices have the **same** indications for use, composition of patient contact materials, viewing direction, length, and reprocessing/sterilization method as the predicates. The subject devices use the same processors and peripherals as the predicate device.

The main differences between the subject devices and predicate devices are as follows:

- Minor differences with observation range, field of view, diameter, and bending capacity.
- The subject device includes the G5 upgrade, which is characterized by the following minor differences:
  - The L-Port has been eliminated. The L-port functioned as a lens wash port . Doctors had the option to take a syringe to inject a fluid to use it as a high pressure wash for the lens.

Questions? Contact FDA/CDRH/OCE/DID at CDRH-FOISTATUS@fda.hhs.gov or 301-796-8118

Record processed under FOIA #2015-10057 7/7/16

This function was eliminated because demand was low and it was rarely used by the surgeons.

- The J-Port was repositioned. The J-Port is used as a jet water wash port. The J-Port was repositioned based on doctor feedback. The port was moved from the bottom part to the top (end) of the scope. There was also a desire to eliminate check valves to facilitate reprocessing and cleaning, as well as prevent clogging.
- A G5 forceps inlet port was modified. The new port is smaller and comes with a rubber cap. The smaller port and rubber cap help increase suction and reduce leakage.
- The jet wash line check valve was removed. Internal check valves were removed to eliminate the potential for clogging and to facilitate cleaning, disinfection, and sterilization. The valves are now external and removable.
- The suction and air/water cylinders and valves were upgraded. They were updated to accommodate the new valves. The function of the valves is the same.
- Addition of the FOV, which is the rubber forceps inlet valve cover. This helps create a watertight seal when the endoscope is used.
- Upgrade to CA-500 cleaning adaptor. The cleaning adaptor allows the scope to be connected to tubes for cleaning.

Description of the Device [21 CFR 807.92(a)(4)]

The Fujinon G5 Duodenoscopes are medical endoscopes used for the visualization of the duodenum and upper digestive tract, specifically for the observation, diagnosis, and endoscopic treatment of the esophagus, stomach, and duodenum.

The G5 Duodenoscopes are offered in a 200 and 400 series. The ED-250XT5 represents the G5 Duodenoscope 200 series and the ED-450XT5 represents the G5 Duodenoscope 400 series.

The G5 Duodenoscopes include minor changes that improve the useability, ergonomics, and cleaning of the devices. The G5 scopes do not have an L-Port. The L-port functioned as a lens wash port. Doctors had the option to take a syringe to inject a fluid to use it as a high pressure wash for the lens. This function was eliminated because demand was low and it was rarely used by the surgeons.

The J-Port was repositioned. The J-Port is used as a jet water wash port. The J-Port was repositioned based on doctor feedback. The port was moved from the bottom part to the top (end) of the scope. There was also a desire to eliminate check valves to facilitate reprocessing and cleaning, as well as prevent clogging.

A G5 forceps inlet port was modified. The new port is smaller and comes with a rubber cap. The new design helps increase suction and reduces leakage.

The jet wash line check valve was removed. Internal check valves were removed to eliminate the potential for clogging and to facilitate cleaning, disinfection, and sterilization. The valves are now external and removable.

The suction and air/water cylinders and valves were upgraded. They were updated to accommodate the new valves. The function of the valves is the same.

The G5 Duodenoscopes also feature the addition of the FOV, which is the rubber forceps inlet valve cover. This helps create a watertight seal when the endoscope is used. Upgrade to CA-500 cleaning adaptor. The cleaning adaptor allows the scope to be connected to tubes for cleaning.

Questions? Contact FDA/CDRH/OCE/DID at CDRH-FOISTATUS@fda.hhs.gov or 301-796-8118

Record processed under FOIA #2015-10057 7/7/16

The G5 Duodenoscopes are used with the same processors, monitors, hard copy units, and carts as the predicate devices. Each Duodenoscope is packaged in a protective carrying case with lens cleaner, silicon oil, forceps valve, waterproof cap, S connector cap, protective cap, adapters, valves, and the Operation Manual.

The Fujinon G5 Duodenoscopes are used in conjunction with other peripherals specified in the Operation Manual such as:

- Light Source
- Processor
- Cart
- Data Keyboard
- Foot Switch
- Monitor
- Video Printer
- Camera and Hard Copy Unit
- VCR
- ElectroSurgical Instruments

Specifications for ED-450XT5 and ED-250XT5

	ED-450XT5	**ED-250XT5**
Viewing Direction	Lateral (15 degrees retro)	Lateral (15 degrees retro)
Observation Range	3-60mm	5-60mm
Field of View	100 degrees	100 degrees
Image Size	Super Image	Super Image
Distal End Diameter	13.5mm	13.5mm
Flexible Portion Diameter	12.6mm	12.6mm
Bending Capacity UP	130 degrees	130 degrees
Bending Capacity DOWN	90 degrees	90 degrees
Bending Capacity LEFT	90 degrees	90 degrees
Bending Capacity RIGHT	110 degrees	110 degrees
Forceps Channel Diameter	4.2mm	4.2mm
Working Length	1250mm	1250mm
Total Length	1550mm	1550mm

Questions? Contact FDA/CDRH/OCE/DID at CDRH-FOISTATUS@fda.hhs.gov or 301-796-8118

Record processed under FOIA #2015-10057 7/7/16

		ED-450XT5	ED-250XT5
Material of Outer Lines (G1)		LaSf-n17	LaSf-n17
Lens Diameter (mm)		2.2	2.2
Electronic Video Imaging System	Total Pixels	411,988	411,988
	Pixels per square millimeter	83,892	83,892
	Size of Pixel (H*V mm)	0.0032*0.003725	0.0032*0.003725
	Active area of CCD chip (H*V mm)	2.458*1.840	2.458*1.840
	Type of CCD chip	Interline Color Chip	Interline Color Chip
Image Quality Resolution (lines / mm) – Near Point		15.9 lines/mm (6mm)	14.3 lines/mm (7mm)
Image Quality Resolution (lines/mm) – Far Point		2.00 lines/mm (60mm)	1.59 lines/mm (60mm)
Magnification (specify monitor size and type used for this specification)		26 (5m) at 14 inch monitor	31 (5m) at 14 inch monitor
Focal Length		1.459mm	1.459mm

Intended Use [21 CFR 807.92(a)(5)]

The device is intended for the visualization of the duodenum and upper digestive tract, specifically for the observation, diagnosis, and endoscopic treatment of the esophagus, stomach, and duodenum.

Technological Characteristics [21 CFR 807.92(a)(6)]

Fujinon, Inc. believes that the subject device is substantially equivalent to the predicate device. The subject device have the **same** indications for use, composition of patient contact material, viewing direction, length, and reprocessing/sterilization method as the predicate. The subject devices use the same processors and peripherals as the predicate devices.

The main differences are the minor changes associated with the G5 upgrade. The G5 changes were previously cleared by FDA in the 510(k) submission for the Fujinon Double Balloon Enteroscopy System – K040048.

Performance Data [21 CFR 807.92(b)(1)]

The subject device has been subjected to and passed EMC testing requirements. The patient contact materials in the Duodenoscopes are identical to the materials used in the predicate device.

Conclusion [21 CFR 807.92(b)(3)]

We believe the changes are minor and conclude that the subject devices are as safe and effective as the predicate devices.

Questions? Contact FDA/CDRH/OCE/DID at CDRH-FOISTATUS@fda.hhs.gov or 301-796-8118

Record processed under FOIA #2015-10057 7/7/16

Comparison Chart

	ED-450XT5	ED-400XL
510(k) Number	Pending	K944620
Materials	Same	Same
Indications for Use	Same	Same
Viewing Direction	Lateral (15 degrees retro)	Lateral (7.5 degrees retro)
Observation Range	3-60mm	5-100mm
Field of View	100 degrees	90 degrees
Image Size	Super Image	70% image
Distal End Diameter	13.5mm	12.0mm
Flexible Portion Diameter	12.6mm	11.2mm
Bending Capacity UP	130 degrees	130 degrees
Bending Capacity DOWN	90 degrees	90 degrees
Bending Capacity LEFT	90 degrees	90 degrees
Bending Capacity RIGHT	110 degrees	110 degrees
Forceps Channel Diameter	4.2mm	2.8mm
Working Length	1250mm	1250mm
Total Length	1550mm	1550mm
Reprocessing	Cleaning – Detergent Disinfection – Cidex Sterilization – Ethylene Oxide (20 v/v%, 55°C, Normal humidity, 167 kPa, 4 hours)	Cleaning – Detergent Disinfection – Cidex Sterilization – Ethylene Oxide (20 v/v%, 55°C, Normal humidity, 167 kPa, 4 hours)
Processor	400 Series Processor	400 Series Processor
Peripherals	Light Source Processor Foot Switch Cart Data Keyboard Monitor Video Printer Camera / Hard Copy Unit VCR ElectroSurgical Instruments	Light Source Processor Foot Switch Cart Data Keyboard Monitor Video Printer Camera / Hard Copy Unit VCR ElectroSurgical Instruments
G5 Upgrade	Yes, includes the G5 upgrade (see below)	No, does not include the G5 upgrade

Questions? Contact FDA/CDRH/OCE/DID at CDRH-FOISTATUS@fda.hhs.gov or 301-796-8118

Record processed under FOIA #2015-10057 7/7/16

	ED-250XT5	ED-200XU
510(k) Number	Pending	K944759
Materials	Same	Same
Indications for Use	Same	Same
Viewing Direction	Lateral (15 degrees retro)	Lateral (7.5 degrees retro)
Observation Range	5-60mm	5-100mm
Field of View	100 degrees	90 degrees
Image Size	Super Image	90% image
Distal End Diameter	13.5mm	13.0mm
Flexible Portion Diameter	12.6mm	12.1mm
Bending Capacity UP	130 degrees	130 degrees
Bending Capacity DOWN	90 degrees	90 degrees
Bending Capacity LEFT	90 degrees	90 degrees
Bending Capacity RIGHT	110 degrees	110 degrees
Forceps Channel Diameter	4.2mm	3.7mm
Working Length	1250mm	1250mm
Total Length	1550mm	1520mm
Operating Section	G5	Standard
Reprocessing	Cleaning – Detergent Disinfection – Cidex Sterilization – Ethylene Oxide (20 v/v%, 55°C, Normal humidity, 167 kPa, 4 hours)	Cleaning – Detergent Disinfection – Cidex Sterilization – Ethylene Oxide (20 v/v%, 55°C, Normal humidity, 167 kPa, 4 hours)
Processor	200 Series Processor	200 Series Processor
Peripherals	Light Source Processor Foot Switch Cart Data Keyboard Monitor Video Printer Camera / Hard Copy Unit VCR ElectroSurgical Instruments	Light Source Processor Foot Switch Cart Data Keyboard Monitor Video Printer Camera / Hard Copy Unit VCR ElectroSurgical Instruments
G5 Upgrade	Yes, includes the G5 upgrade (see below).	No, does not include the G5 upgrade

Questions? Contact FDA/CDRH/OCE/DID at CDRH-FOISTATUS@fda.hhs.gov or 301-796-8118

Record processed under FOIA #2015-10057 7/7/16

NOTE: G5 Upgrade

The G5 scopes do not have an L-Port. The L-port functioned as a lens wash port . Doctors had the option to take a syringe to inject a fluid to use it as a high pressure wash for the lens. This function was eliminated because demand was low and it was rarely used by the surgeons.

The J-Port was repositioned. The J-Port is used as a jet water wash port. The J-Port was repositioned based on doctor feedback. The port was moved from the bottom part to the top (end) of the scope. There was also a desire to eliminate check valves to facilitate reprocessing and cleaning, as well as prevent clogging.

A G5 forceps inlet port was modified. The new port is smaller and comes with a rubber cap. The new design helps increase suction and reduce leakage.

The jet wash line check valve was removed. Internal check valves were removed to eliminate the potential for clogging and to facilitate cleaning, disinfection, and sterilization. The valves are now external and removable.

The suction and air/water cylinders and valves were upgraded. They were updated to accommodate the new valves. The function of the valves is the same.

Addition of the FOV, which is the rubber forceps inlet valve cover. This helps create a watertight seal when the endoscope is used. Upgrade to CA-500 cleaning adaptor. The cleaning adaptor allows the scope to be connected to tubes for cleaning.

Questions? Contact FDA/CDRH/OCE/DID at CDRH-FOISTATUS@fda.hhs.gov or 301-796-8118

Record processed under FOIA #2015-10057 7/7/16

DEPARTMENT OF HEALTH & HUMAN SERVICES

Public Health Service
Food and Drug Administration
Memorandum

From: Reviewer(s) - Name(s) Mary J. Cornelius

Subject: 510(k) Number K042076/S1

To: The Record - It is my recommendation that the subject 510(k) Notification:

- ☐ Refused to accept.
- ☐ Requires additional information (other than refuse to accept).
- ☑ Is substantially equivalent to marketed devices.
- ☐ NOT substantially equivalent to marketed devices.
- ☐ Other (e.g., exempt by regulation, not a device, duplicate, etc.)

Is this device subject to Section 522 Postmarket Surveillance?	☐ YES	☑ NO
Is this device subject to the Tracking Regulation?	☐ YES	☑ NO
Was clinical data necessary to support the review of this 510(k)?	☐ YES	☑ NO
Is this a prescription device?	☑ YES	☐ NO
Was this 510(k) reviewed by a Third Party?	☐ YES	☑ NO
Special 510(k)?	☐ YES	☑ NO
Abbreviated 510(k)? Please fill out form on H Drive 510k/boilers	☐ YES	☑ NO

Truthful and Accurate Statement ☐ Requested ☑ Enclosed

☑ A 510(k) summary OR ☐ A 510(k) statement

☐ The required certification and summary for class III devices NA

☑ The indication for use form

Combination Product Category (Please see algorithm on H drive 510k/Boilers) NO

Animal Tissue Source ☐ YES ☑ NO Material of Biological Origin ☐ YES ☑ NO

The submitter requests under 21 CFR 807.95 (doesn't apply for SEs):

☐ No Confidentiality ☐ Confidentiality for 90 days ☐ Continued Confidentiality exceeding 90 days

Predicate Product Code with class: FDT II 876.1500

Additional Product Code(s) with panel (optional):

Review: Lauren H. Thorne (Branch Chief) VLDR (Branch Code) 11/17/04 (Date)

Final Review: David A. Ilgenfritz (Division Director) 11/18 (Date)

Revised:4/2/03

4

Questions? Contact FDA/CDRH/OCE/DID at CDRH-FOISTATUS@fda.hhs.gov or 301-796-8118

Record processed under FOIA #2015-10057 7/7/16

K042076 **Date:** November 9, 2004

"SUBSTANTIAL EQUIVALENCE" (SE) DECISION-MAKING DOCUMENTATION
Reviewer: Mary J. Cornelius **Division/Branch:** DRARD/ULDB

Trade Name: G5 Duodenoscopes ED-450XT5, ED-250XT5
Common Name: Duodenoscopes

Primary Classification: II 21 **CFR** § 876.1500 **ProCode:** 78 **FDT**
Product To Which Compared: Fujinon Enteroscope EN-410WM K040048; Fujinon 400 Series Endoscopes K944620; Fujinon 200 Series Endoscopes K944759

Contact: Joseph Azary **Email:**jason.ylizarde@fujinon.com **Phone:** 973-633-5600 NJ
FAX: 973-633-8818

	YES	NO	
1. Is Product A Device	✓		If **NO** = Stop
2. Is Device Subject To 510(k)?	✓		If **NO** = Stop
3. Same Indication Statement?	✓		If **YES** = Go To 5
5. Same Technological Characteristics?	✓		If **YES** = Go To 7
7. Descriptive Characteristics Precise Enough?	✓		If **NO** = Go To 10 If **YES** = Stop **SE**

NARRATIVE DEVICE DESCRIPTION *This review includes the additional information requested 08/18/04 via Email (copy attached) and response received via letter dated10/28/04. (additional information highlighted).*

INTENDED USE: The device is intended for the visualization of the duodenum and upper digestive tract, specifically for the observation, diagnosis, and endoscopic treatment of the esophagus, stomach, and duodenum.

DEVICE DESCRIPTION:
The G5 Duodenoscopes are offered in a 200 and 400 series; the G5 ED-250XT5 version of the 200 series Duodenoscopes (K944759) and the G5 version ED-450XT5 of the 400 series Duodenoscopes (K944620). The G5 Duodenoscopes include minor changes designed to improve the useability, ergonomics, and cleaning of the devices.
Changes include:

- Removal of the L (lens wash port);
- Reposition of J Port;
- Reduction in size of the forceps port;
- Internal check valves removed to prevent clogging and improve access for cleaning;
- Upgrade of suction and air/water cylinders and valves;
- Addition of rubber forceps inlet valve cover; and
- Upgrade to CA-500 cleaning adaptor

Questions? Contact FDA/CDRH/OCE/DID at CDRH-FOISTATUS@fda.hhs.gov or 301-796-8118

Record processed under FOIA #2015-10057 7/7/16

The Duodenoscopes included in this submission have an operating section (head), a flexible insertion tube and a distal bending section. The operating head contains the image management controls (freeze frame/hard copy, VCR remote control, zooming remote switch) and the repositioned J port as well as the suction button and the air/water feed button. On the lateral side of the operating section are the articulation handles which control up/down and right/left movement of the distal bending section. Any position of the bending section may be locked in place by a lock behind the articulation handles. The locking mechanism is a brake that puts a drag on the bending cables to hold the angle in place permitting the angulation to be more easily halted by any obstacle in its path. This locking/brake mechanism is identical to the mechanism used on all predicate endoscopes. The control for the forcep elevator is located directly behind the articulation handles. When the lever is pushed up the distal end deflects to a right angle, placing the endotherapy device in the field of view; reversing this action eliminates the deflection. Access to the working channel is located in the distal part of the operating section which has the updated suction and air water cylinders designed to facilitate cleaning. The working channel now has a rubber valve to prevent the escape of fluids. The flexible bending section contains the articulation wires, working channel and air/water channels as well as the light guide. The distal end of the scope varies in size to reflect the flat side of the side viewing instrument (12mm)and that part which is rounded (12.8mm) The distal end of the insertion tube has a charge couple device (CCD) which transmits images to a video monitor. The distal tip of the scope houses the viewing lens, 2 light guide ports, as well as the outlet for air/water and suction/working channel. The universal cord, attached to the lateral side of the handle, bifurcates into the light guide and the video processing connector. The light guide connects the endoscope to a light source while the video process connector is designed to fit an image processor. The distal end of the light guide connector has access ports for suction and water supply as well as a venting port and an electrical safety ground port ("S" cord).
The G5 Duodenoscopes are used with the same processors, monitors, hard copy units, and carts as the predicate devices. Detailed device description/diagrams have been provided.

Each duodenoscope is packaged in a protective carrying case with lens cleaner (SLC-1); silicon oil (SLC-2000); !0 forceps valves (FOV-DV7); protective cap for suction; air/water ventilating connector; Biopsy forceps; 2 cannulation tubes; cleaning brush; waterproof cap for video connector; cleaning adaptor (CA-500); ventilation adaptor (AD-7); Mouthpiece (MPC-ST); S connector cap (CAP-E); J Port accessories, cleaning adaptor (CJ-500); Flexible adapter (FAX-3), 2 Check valves (AJ-500); Protective Cap (CAP-J); 1 syringe, Operation Manual and Cleaning, Disinfection and Storage Manual.

MATERIALS: According to the sponsor, the patient contact materials (includes optical glass, polysulfone, stainless steel, fluorinated rubber and acrylic polyol) are identical to the patient contact materials described in K040048 (Enteroscope EN-410WM).

BIOCOMPATIBILITY: Attachment D of the predicate device includes test results (cytotoxicity testing, skin sensitization, and intracutaneous reactivity) Fujinon has provided a certification statement that the materials used in the subject device are identical to those used in the predicate device

Questions? Contact FDA/CDRH/OCE/DID at CDRH-FOISTATUS@fda.hhs.gov or 301-796-8118

Record processed under FOIA #2015-10057 7/7/16

Specifications

(b)(4)

[redacted]

	YES	NO
· Is the device life-supporting or life sustaining?		N
· Is the device implanted (short-term or long-term)?		N
· Does the device design use software?		N
· Is the device sterile?		N
· Is the device single use? ?		N
· Is the device home use?		N
· Is the device for prescription use?	Y.	.
· Does the device contain a drug or biological product as a component?		N
· Is this device a kit?		N

Questions? Contact FDA/CDRH/OCE/DID at CDRH-FOISTATUS@fda.hhs.gov or 301-796-8118

Record processed under FOIA #2015-10057 7/7/16

ELECTRICAL SAFETY AND ELECTROMAGNETIC COMPATIBILITY: Classification of Medical Electrical Equipment:

1. Type of protection against electric shock: Class 1 Equipment
2. Degree of protection against electric shock: Type BF applied part
3. Degree of explosion protection: Prohibited use in flammable gas environment

The test results have been attached in Annex 2.

THERMAL SAFETY: The G5 scopes have been tested to and passed IEC 601-2-18 testing including the temperatures of parts that may come into contact with the patient or user. The temperatures of the subject device do not exceed the maximum temperatures (41° C) in compliance with IEC 601-2-18.

LABELING has been provided which includes Package labeling an Operation Manuals for the Cleaning, Disinfection and Storage Manual. **An appropriate prescription statement as required by CFR 21.807.87 (e) has been added**. Fujinon removed **the statement on page 4-33, "An enough sporicidal activity might not be able to be expected in the usage of this table**

NOTE: The Fujinon 200 and 400 series duodenoscopes have an elevator wire that is completely sealed and does not require special reprocessing. These models can be reprocessed in an automatic endoscope reprocessor and would not require a dedicated connector.

STERILITY INFORMATION: None of the components included in this submission are sold as sterile. The sponsor has provided reprocessing instructions and a Certification that the reprocessing procedures have been validated (see specific recommendations included in the device descriptions). **Fujinon has clarified that the Cleaning and Disinfection manual applies to all Fujinon endoscopes. When an exception is made, the sponsor identifies the specific series that are exempted. Finally, the sponsor has provided those pages from the Cleaning and Disinfection manual that have been modified or removed as suggested.**

	YES	NO
· Is the device life-supporting or life sustaining?		N
· Is the device implanted (short-term or long-term)?		N
· Does the device design use software?		N
· Is the device sterile?		N
· Is the device single use? ?		N
· Is the device home use?		N
· Is the device for prescription use?	Y.	.
· Does the device contain a drug or biological product as a component?		N
· Is this device a kit?		N

ADMINISTRATIVE REQUIREMENTS: Indications for Use; Truthful Accurate Statement, and 510(k) Summary

Questions? Contact FDA/CDRH/OCE/DID at CDRH-FOISTATUS@fda.hhs.gov or 301-796-8118

Record processed under FOIA #2015-10057 7/7/16

SUBSTANTIAL EQUIVALENCE: The sponsor claims equivalence of G series (EC-450HL5, EC-250HL5) to the Fujinon Enteroscope EN-410WM K040048; Fujinon 400 Series Endoscopes K944620; Fujinon 200 Series Endoscopes K944759 in terms of design, specifications and materials. Fujinon has provided a list of minor modifications/upgrades made to the predicate devices, which do not raise safely and effectiveness issues. These differences, identified in the device description, above would not affect safety and effectiveness.

RECOMMENDATION: Substantially equivalent to other Class II devices, Procode **FDT,** described in 21 CFR § 876.1500

Mary J. Cornelius .Concurrence: Janine Morris; Chief, ULDB

10

Questions? Contact FDA/CDRH/OCE/DID at CDRH-FOISTATUS@fda.hhs.gov or 301-796-8118

Record processed under FOIA #2015-10057 7/7/16

DEPARTMENT OF HEALTH & HUMAN SERVICES

Public Health Service
Food and Drug Administration
Memorandum

From: Reviewer(s) - Name(s) M J. Conelan

Subject: 510(k) Number K 042076

To: The Record - It is my recommendation that the subject 510(k) Notification:

- ☐ Refused to accept.
- ☑ Requires additional information (other than refuse to accept). phone hold
- ☐ Is substantially equivalent to marketed devices.
- ☐ NOT substantially equivalent to marketed devices.
- ☐ Other (e.g., exempt by regulation, not a device, duplicate, etc.)

Is this device subject to Section 522 Postmarket Surveillance?	☐ YES	☐ NO
Is this device subject to the Tracking Regulation?	☐ YES	☐ NO
Was clinical data necessary to support the review of this 510(k)?	☐ YES	☐ NO
Is this a prescription device?	☐ YES	☐ NO
Was this 510(k) reviewed by a Third Party?	☐ YES	☐ NO
Special 510(k)?	☐ YES	☐ NO
Abbreviated 510(k)? Please fill out form on H Drive 510k/boilers	☐ YES	☐ NO

Truthful and Accurate Statement ☐ Requested ☐ Enclosed

☐ A 510(k) summary OR ☐ A 510(k) statement

☐ The required certification and summary for class III devices

☐ The indication for use form

Combination Product Category (Please see algorithm on H drive 510k/Boilers) _____

Animal Tissue Source ☐ YES ☐ NO Material of Biological Origin ☐ YES ☐ NO

The submitter requests under 21 CFR 807.95 (doesn't apply for SEs):

☐ No Confidentiality ☐ Confidentiality for 90 days ☐ Continued Confidentiality exceeding 90 days

Predicate Product Code with class: Additional Product Code(s) with panel (optional):

Review: [signature] UOB 8/27/04
(Branch Chief) (Branch Code) (Date)

Final Review: _____
(Division Director) (Date)

28

Revised:4/2/03

Questions? Contact FDA/CDRH/OCE/DID at CDRH-FOISTATUS@fda.hhs.gov or 301-796-8118

Record processed under FOIA #2015-10057 7/7/16

510(k) "SUBSTANTIAL EQUIVALENCE" DECISION-MAKING PROCESS

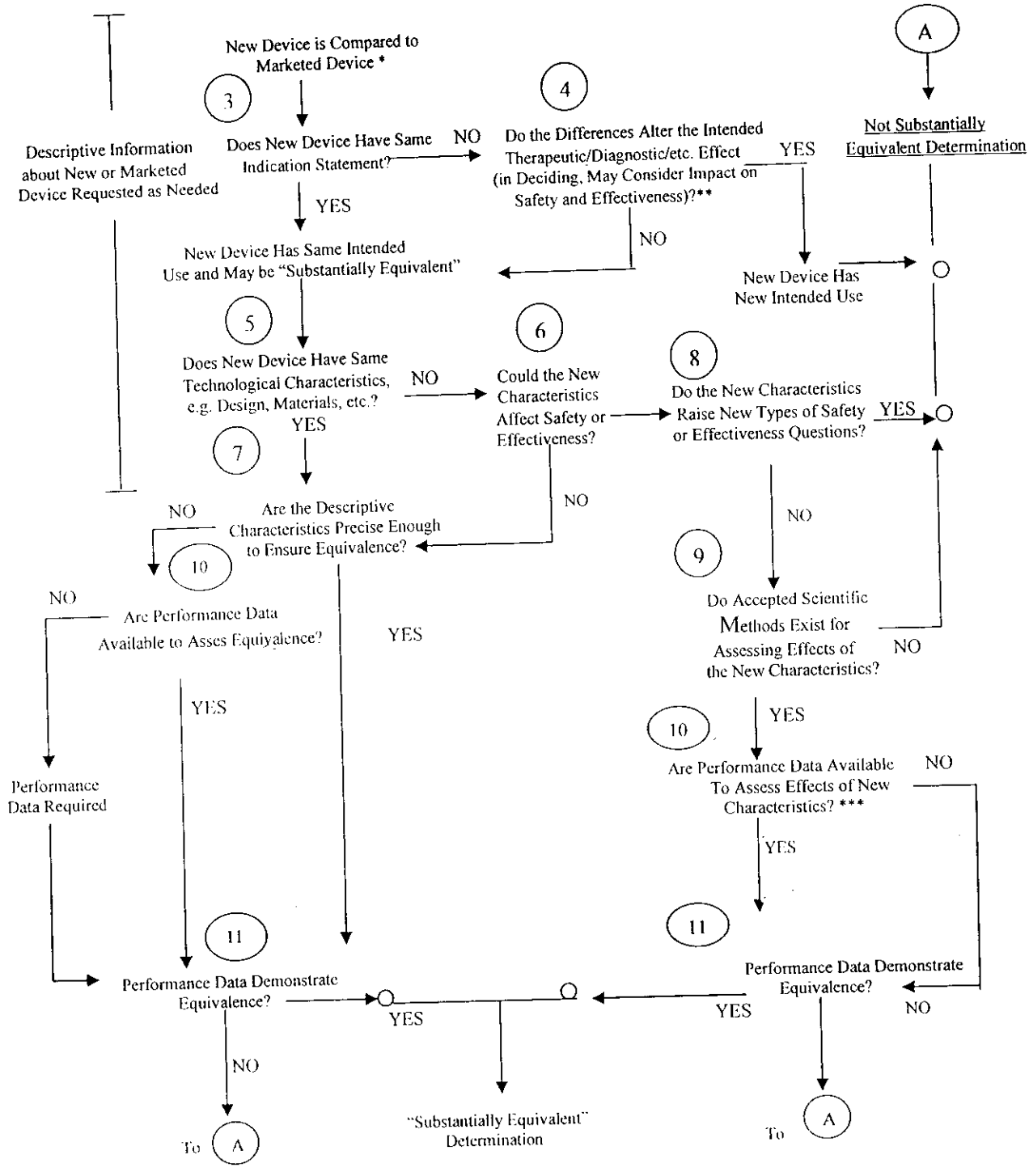

* 510(k) Submissions compare new devices to marketed devices. FDA requests additional information if the relationship between marketed and "predicate" (pre-Amendments or reclassified post-Amendments) devices is unclear.

** This decision is normally based on descriptive information alone, but limited testing information is sometimes required.

*** Data maybe in the 510(k), other 510(k)s, the Center's classification files, or the literature.

29

Questions? Contact FDA/CDRH/OCE/DID at CDRH-FOISTATUS@fda.hhs.gov or 301-796-8118

Record processed under FOIA #2015-10057 7/7/16

MEMORANDUM

FOOD AND DRUG ADMINISTRATION
CENTER FOR DEVICES AND
RADIOLOGICAL HEALTH
OFFICE OF DEVICE EVALUATION

DATE: August 25, 2004
FROM: Mary J. Cornelius
SUBJECT: K042076 G5 Duodenoscopes ED-450XT5, ED-250XT5
TO: The Record
CONTACT: Joseph Azary **Email**: info@azarytech.com **Phone:** 203-944-9310 CT

INTENDED USE: The device is intended for the visualization of the duodenum and upper digestive tract, specifically for the observation, diagnosis, and endoscopic treatment of the esophagus, stomach, and duodenum.

The sponsor will be asked to provide the following:

K042076 G5 Duodenoscopes ED-450XT5, ED-250XT5

(b)(4)

1. [redacted]
2. [redacted]
3. [redacted]
4. [redacted]
5. [redacted]
6. [redacted]
7. [redacted]
8. [redacted]

30

Questions? Contact FDA/CDRH/OCE/DID at CDRH-FOISTATUS@fda.hhs.gov or 301-796-8118

(b)(4)

9.

10.

11.

I was unable to contacted Mr. Azary by phone, therefore I will relayed my questions via Email and followed up with a phone call. This submission will be placed on hold pending the receipt of the requested information.

Questions? Contact FDA/CDRH/OCE/DID at CDRH-FOISTATUS@fda.hhs.gov or 301-796-8118

Record processed under FOIA #2015-10057 7/7/16

SCREENING CHECKLIST
FOR ALL PREMARKET NOTIFICATION [510(k)] SUBMISSIONS

510(k) Number: K042067

The cover letter clearly identifies the type of 510(k) submission as **(Check the appropriate box)**:

☐ Special 510(k) - Do Sections 1 and 2

☐ Abbreviated 510(k) - Do Sections 1, 3 and 4

X Traditional 510(k) or no identification provided -Do Sections 1 and 4

Section 1: Required Elements for All Types of 510(k) submissions:

	Present	Inadequate or Missing
Cover letter, containing the elements listed on page 3-2 of the Premarket Notification [510)] Manual.	√	
Table of Contents.	√	
Truthful and Accurate Statement.	√	
Device's Trade Name, Device's Classification Name and Establishment Registration Number.	√	
Device Classification Regulation Number and Regulatory Status (Class I, Class II, Class III or Unclassified).	√	
Proposed Labeling including the material listed on page 3-4 of the Premarket Notification [510)] Manual.	√	
Statement of Indications for Use that is on a separate page in the premarket submission.	√	
Substantial Equivalence Comparison, including comparisons of the new device with the predicate in areas that are listed on page 3-4 of the Premarket Notification [510)] Manual.	√	
510(k) Summary or 510(k) Statement.	√	
Description of the device (or modification of the device) including diagrams, engineering drawings, photographs or service manuals.	√	
Identification of legally marketed predicate device. *	√	
Compliance with performance standards. * [See Section 514 of the Act and 21 CFR 807.87 (d).]	N/A	
Class III Certification and Summary. **	N/A	
Financial Certification or Disclosure Statement for 510(k) notifications with a clinical study. * [See 21 CFR 807.87 (i)]	N/A	
510(k) Kit Certification ***	N/A	

32

Questions? Contact FDA/CDRH/OCE/DID at CDRH-FOISTATUS@fda.hhs.gov or 301-796-8118

Record processed under FOIA #2015-10057 7/7/16

Section 4: Additional Requirements for ABBREVIATED and TRADITIONAL 510(k) submissions (If Applicable):

	Present	Inadequate or Missing
a) Biocompatibility data for all patient-contacting materials, OR certification of identical material/formulation:	Y	
b) Sterilization and expiration dating information:	Y	
i) sterilization process	Y	
ii) validation method of sterilization process	Y	
iii) SAL	Y	
iv) packaging	Y	
v) specify pyrogen free	N	
vi) ETO residues	Y	
vii) Traditional Method or Non-Traditional Method	T	
viii)radiation dose	N/A	
c) Software Documentation:	N/A	

Passed Screening __√__ **Yes** _____ **No**
Reviewer:_____
Concurrence by Review Branch:_____

Date:_____

Questions? Contact FDA/CDRH/OCE/DID at CDRH-FOISTATUS@fda.hhs.gov or 301-796-8118

Record processed under FOIA #2015-10057 7/7/16

Internal Administrative Form

K042067	YES	NO
1. Did the firm request expedited review?		X
2. Did we grant expedited review?		N/A
3. Have you verified that the Document is labeled Class III for GMP purposes?		N/A
4. If, not, has POS been notified?		N/A
5. Is the product a device?	X	
6. Is the device exempt from 510(k) by regulation or policy?		X
7. Is the device subject to review by CDRH?	X	
8. Are you aware that this device has been the subject of a previous NSE decision?		X
9. If yes, does this new 510(k) address the NSE issue(s), (e.g., performance data)?		N/A
10. Are you aware of the submitter being the subject of an integrity investigation?		X
11. If, yes, consult the ODE Integrity Officer.		
12. Has the ODE Integrity Officer given permission to proceed with the review? (Blue Book Memo #I91-2 and Federal Register 90N0332, September 10, 1991.		N/A

Questions? Contact FDA/CDRH/OCE/DID at CDRH-FOISTATUS@fda.hhs.gov or 301-796-8118

Record processed under FOIA #2015-10057 7/7/16

510(k) "SUBSTANTIAL EQUIVALENCE" DECISION-MAKING PROCESS

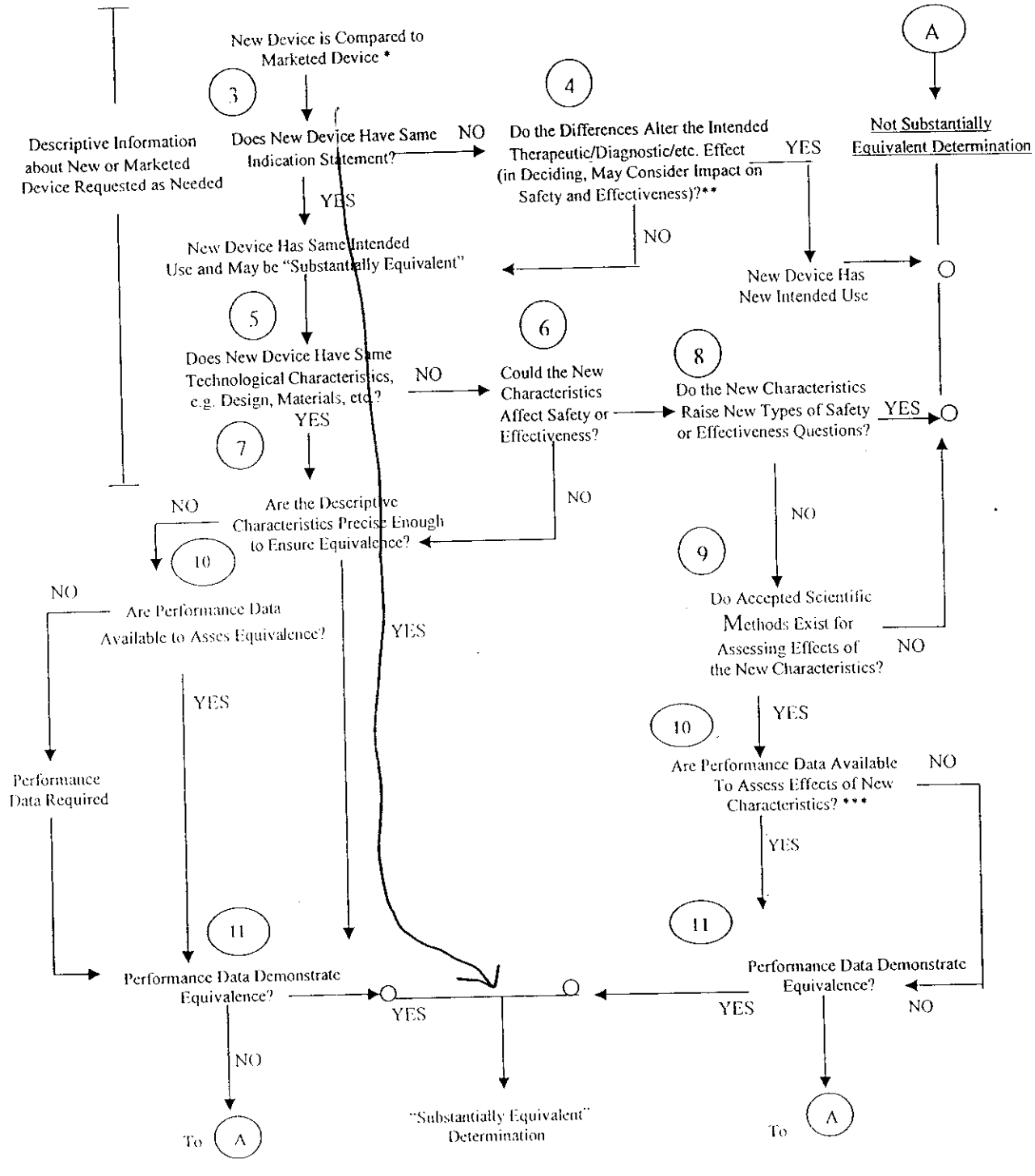

* 510(k) Submissions compare new devices to marketed devices. FDA requests additional information if the relationship between marketed and "predicate" (pre-Amendments or reclassified post-Amendments) devices is unclear.

** This decision is normally based on descriptive information alone, but limited testing information is sometimes required.

*** Data maybe in the 510(k), other 510(k)s, the Center's classification files, or the literature.

5

Questions? Contact FDA/CDRH/OCE/DID at CDRH-FOISTATUS@fda.hhs.gov or 301-796-8118

Record processed under FOIA #2015-10057 7/7/16

DEPARTMENT OF HEALTH AND HUMAN SERVICES Public Health Service

Food and Drug Administration
Center for Devices and
Radiological Health
Office of Device Evaluation
Document Mail Center (HFZ-401)
9200 Corporate Blvd.
Rockville, Maryland 20850

October 29, 2004

FUJINON, INC.
C/O AZARY TECHNOLOGIES LLC
P.O. BOX 2156
HUNTINGTON, CT 06484
ATTN: JOSEPH M. AZARY

510(k) Number: K042076
Product: FUJINON G5 DUODENSCOPES; G5 DUODENOSCOPES, ED-450XT5,

The additional information you have submitted has been received.

We will notify you when the processing of this submission has been completed or if any additional information is required. Please remember that all correspondence concerning your submission MUST be sent to the Document Mail Center (HFZ-401) at the above letterhead address. Correspondence sent to any address other than the one above will not be considered as part of your official premarket notification submission. Also, please note the new Blue Book Memorandum regarding Fax and E-mail Policy entitled, "Fax and E-Mail Communication with Industry about Premarket Files Under Review. Please refer to this guidance for information on current fax and e-mail practices at www.fda.gov/cdrh/ode/a02-01.html.

The Safe Medical Devices Act of 1990, signed on November 28, states that you may not place this device into commercial distribution until you receive a letter from FDA allowing you to do so. As in the past, we intend to complete our review as quickly as possible. Generally we do so 90 days. However, the complexity of a submission or a requirement for additional information may occasionally cause the review to extend beyond 90 days. Thus, if you have not received a written decision or been contacted within 90 days of our receipt date you may want to check with FDA to determine the status of your submission.

If you have procedural or policy questions, please contact the Division of Small Manufacturers International and Consumer Assistance (DSMICA) at (301) 443-6597 or at their toll-free number (800) 638-2041, or contact me at (301) 594-1190.

Sincerely yours,

Marjorie Shulman
Supervisory Consumer Safety Officer
Premarket Notification Section
Office of Device Evaluation
Center for Devices and
Radiological Health

11

Questions? Contact FDA/CDRH/OCE/DID at CDRH-FOISTATUS@fda.hhs.gov or 301-796-8118

Record processed under FOIA #2015-10057 7/7/16

K042076/S1

CDRH Document Mail Center
Document Mail Center (HFZ-401)
Center for Devices and Radiological Health
9200 Corporate Boulevard
Rockville, MD 20850

October 27, 2004

RE: **ADDITIONAL INFORMATION for** 510(k) **K042076 G5 Duodenoscopes models ED-450XT5 and ED-250XT5**

Dear Sir/Madam:

This is in response to a request for additional information from Ms. Mary Cornelius (Office of Device Evaluation) concerning 510(k) K042076. Azary Technologies LLC has been authorized to address questions concerning this 510(k) on behalf of Fujinon Inc. As required by section 510(k) of the Food, Drug and Cosmetic Act, Fujinon Inc. notifies FDA of its intention to market the Fujinon G5 series Duodenoscopes in the United States.

We thank you for your patience in waiting for our response. Some of the documents and/or information was retrieved from the factory in Japan and had to be translated into English.

Fujinon Inc. believes the enclosed information will be sufficient for the U.S. Food and Drug Administration to reach a positive substantial equivalence decision. If additional information is required, please contact me at (203) 944-9320.

Please notify me of FDA's substantial equivalence decision by facsimile at (203) 944-9317 and by mail at my letterhead address.

Thank you for your time in reviewing this notification.

Sincerely,

Joseph M. Azary

Azary Technologies LLC
543 Long Hill Avenue, Shelton, CT 06484 USA
TEL (203) 944-9320 ● FAX (203) 944-9317
EMAIL: info@azarytech.com

Questions? Contact FDA/CDRH/OCE/DID at CDRH-FOISTATUS@fda.hhs.gov or 301-796-8118

(b)(4) Data Information

(b)(4) Data Information

(b)(4) Data Information

(b)(4) Data Information

Record processed under FOIA #2015-10057 7/7/16

510 (k) Summary

Date Prepared [21 CFR 807.92(a)(1)]

July 29, 2004 [Amended 10/27/04]

Submitter's Information [21 CFR 807.92(a)(1)]

Joseph M. Azary
C/o Fujinon Inc.
543 Long Hill Avenue
Shelton, CT. 06484

Azary Technologies has received authorization to submit this 510(k) on behalf of the sponsor Fujinon Inc., 10 High Point Drive, Wayne, NJ 07470, Establishment Registration# 2431293.

Trade Name, Common Name, Classification [21 CFR 807.92(a)(2)]

The device trade names are: Fujinon G5 Duodenoscopes

Common Name: Duodenoscopes

Classification: Class II, 21 CFR 876.1500, FAK

Predicate Device [21 CFR 807.92(a)(3)]

- Fujinon ED-400XL – K944620
- Fujinon ED-200XU – K944759

The G5 changes were described and cleared by FDA in the 510(k) submission for the Fujinon Double Balloon Enteroscopy System – K040048.

This 510(k) captures some minor design changes that have occurred during the evolution of the product line resulting in the G5 family of scopes. Although the changes are believed to be minor, the 510(k) is being submitted to account for "design creep" and to ensure that FDA has the most current information concerning the Fujinon Duodenoscopes.

The subject devices have the **same** indications for use, composition of patient contact materials, viewing direction, length, and reprocessing/sterilization method as the predicates. The subject devices use the same processors and peripherals as the predicate device.

The main differences between the subject devices and predicate devices are as follows:

- Minor differences with observation range, field of view, diameter, and bending capacity.
- The subject device includes the G5 upgrade, which is characterized by the following minor differences:
    - The L-Port has been eliminated. The L-port functioned as a lens wash port . Doctors had the option to take a syringe to inject a fluid to use it as a high pressure wash for the lens.

Questions? Contact FDA/CDRH/OCE/DID at CDRH-FOISTATUS@fda.hhs.gov or 301-796-8118

Record processed under FOIA #2015-10057 7/7/16

This function was eliminated because demand was low and it was rarely used by the surgeons.

- A G5 forceps inlet port was modified. The new port is smaller and comes with a rubber cap. The smaller port and rubber cap help increase suction and reduce leakage.
- The jet wash line check valve was removed. Internal check valves were removed to eliminate the potential for clogging and to facilitate cleaning, disinfection, and sterilization. The valves are now external and removable.
- The suction and air/water cylinders and valves were upgraded. They were updated to accommodate the new valves. The function of the valves is the same.
- Addition of the FOV, which is the rubber forceps inlet valve cover. This helps create a watertight seal when the endoscope is used.
- Upgrade to CA-500 cleaning adaptor. The cleaning adaptor allows the scope to be connected to tubes for cleaning.

Description of the Device [21 CFR 807.92(a)(4)]

The Fujinon G5 Duodenoscopes are medical endoscopes used for the visualization of the duodenum and upper digestive tract, specifically for the observation, diagnosis, and endoscopic treatment of the esophagus, stomach, and duodenum.

The G5 Duodenoscopes are offered in a 200 and 400 series. The ED-250XT5 represents the G5 Duodenoscope 200 series and the ED-450XT5 represents the G5 Duodenoscope 400 series.

The G5 Duodenoscopes include minor changes that improve the useability, ergonomics, and cleaning of the devices. The G5 scopes do not have an L-Port. The L-port functioned as a lens wash port. Doctors had the option to take a syringe to inject a fluid to use it as a high pressure wash for the lens. This function was eliminated because demand was low and it was rarely used by the surgeons.

A G5 forceps inlet port was modified. The new port is smaller and comes with a rubber cap. The new design helps increase suction and reduces leakage.

The jet wash line check valve was removed. Internal check valves were removed to eliminate the potential for clogging and to facilitate cleaning, disinfection, and sterilization. The valves are now external and removable.

The suction and air/water cylinders and valves were upgraded. They were updated to accommodate the new valves. The function of the valves is the same.

The G5 Duodenoscopes also feature the addition of the FOV, which is the rubber forceps inlet valve cover. This helps create a watertight seal when the endoscope is used. Upgrade to CA-500 cleaning adaptor. The cleaning adaptor allows the scope to be connected to tubes for cleaning.

The G5 Duodenoscopes are used with the same processors, monitors, hard copy units, and carts as the predicate devices. Each Duodenoscope is packaged in a protective carrying case with lens cleaner, silicon oil, forceps valve, waterproof cap, S connector cap, protective cap, adapters, valves, and the Operation Manual.

The Fujinon G5 Duodenoscopes are used in conjunction with other peripherals specified in the Operation Manual such as:

- Light Source

Questions? Contact FDA/CDRH/OCE/DID at CDRH-FOISTATUS@fda.hhs.gov or 301-796-8118

Record processed under FOIA #2015-10057 7/7/16

- Processor
- Cart
- Data Keyboard
- Foot Switch
- Monitor
- Video Printer
- Camera and Hard Copy Unit
- VCR
- ElectroSurgical Instruments

Specifications for ED-450XT5 and ED-250XT5

	ED-450XT5	ED-250XT5
Viewing Direction	Lateral (15 degrees retro)	Lateral (15 degrees retro)
Observation Range	3-60mm	5-60mm
Field of View	100 degrees	100 degrees
Image Size	Super Image	Super Image
Distal End Diameter	13.5mm	13.5mm
Flexible Portion Diameter	12.6mm	12.6mm
Bending Capacity UP	130 degrees	130 degrees
Bending Capacity DOWN	90 degrees	90 degrees
Bending Capacity LEFT	90 degrees	90 degrees
Bending Capacity RIGHT	110 degrees	110 degrees
Forceps Channel Diameter	4.2mm	4.2mm
Working Length	1250mm	1250mm
Total Length	1550mm	1550mm

Questions? Contact FDA/CDRH/OCE/DID at CDRH-FOISTATUS@fda.hhs.gov or 301-796-8118

Record processed under FOIA #2015-10057 7/7/16

		ED-450XT5	ED-250XT5
Material of Outer Lines (G1)		LaSf-n17	LaSf-n17
Lens Diameter (mm)		2.2	2.2
Electronic Video Imaging System	Total Pixels	411,988	411,988
	Pixels per square millimeter	83,892	83,892
	Size of Pixel (H*V mm)	0.0032*0.003725	0.0032*0.003725
	Active area of CCD chip (H*V mm)	2.458*1.840	2.458*1.840
	Type of CCD chip	Interline Color Chip	Interline Color Chip
Image Quality Resolution (lines / mm) – Near Point		15.9 lines/mm (6mm)	14.3 lines/mm (7mm)
Image Quality Resolution (lines/mm) – Far Point		2.00 lines/mm (60mm)	1.59 lines/mm (60mm)
Magnification (specify monitor size and type used for this specification)		26 (5m) at 14 inch monitor	31 (5m) at 14 inch monitor
Focal Length		1.459mm	1.459mm

Intended Use [21 CFR 807.92(a)(5)]

The device is intended for the visualization of the duodenum and upper digestive tract, specifically for the observation, diagnosis, and endoscopic treatment of the esophagus, stomach, and duodenum.

Technological Characteristics [21 CFR 807.92(a)(6)]

Fujinon, Inc. believes that the subject device is substantially equivalent to the predicate device. The subject device have the **same** indications for use, composition of patient contact material, viewing direction, length, and reprocessing/sterilization method as the predicate. The subject devices use the same processors and peripherals as the predicate devices.

The main differences are the minor changes associated with the G5 upgrade. The G5 changes were previously cleared by FDA in the 510(k) submission for the Fujinon Double Balloon Enteroscopy System – K040048.

Performance Data [21 CFR 807.92(b)(1)]

The subject device has been subjected to and passed EMC testing requirements. The patient contact materials in the Duodenoscopes are identical to the materials used in the predicate device.

Conclusion [21 CFR 807.92(b)(3)]

We believe the changes are minor and conclude that the subject devices are as safe and effective as the predicate devices.

Questions? Contact FDA/CDRH/OCE/DID at CDRH-FOISTATUS@fda.hhs.gov or 301-796-8118

Record processed under FOIA #2016-10057 7/7/16

* From the ED-150XT5 Operation Manual

Important Safety Information

1. Intended Use

This product is a medical Endoscope for the duodenum and upper G.I. tract. It is intended for observation, diagnosis, and endoscopic treatment of the esophagus, stomach and duodenum. Never use this product for any other purposes.

2. Safety

Read and understand this manual carefully before use. Use the Endoscope by following the provided instructions. Items important for the safe use of the Endoscope are summarized in Chapter 1 "Safety."

Safety precautions associated with individual operations or procedures are provided separately, indicated by "▲ WARNING" or "▲ CAUTION."

3 Warning

Items that must be observed for safety when performing endoscopy or electrosurgery are identified by "▲ WARNING" or "▲ CAUTION." Perform procedures correctly by reading and understanding the warning information carefully.

▲ WARNING

Improper use or operation of the equipment may injure patients, physicians, or people in the vicinity.

Read and understand this manual carefully before operating the equipment.

Improper operations that will damage the equipment only are identified by "CAUTION."

CAUTION: Federal Law restricts this device to sale by or on the order of a physician.

Questions? Contact FDA/CDRH/OCE/DID at CDRH-FOISTATUS@fda.hhs.gov or 301-796-8118

Record processed under FOIA #2015-10057 7/7/16

* FROM the ED-250XL5 and the ED-250XT5 operation manual

Important Safety Information

1. Intended Use

This product is a medical Endoscope (side viewing) for the duodenum and upper G.I. tract. It is intended for observation, diagnosis, and endoscopic treatment of the esophagus, stomach, and duodenum. Never use this product for any other purposes.

2. Safety

Read and understand this manual carefully before use. Use the Endoscope by following the provided instructions. Items important for the safe use of the Endoscope are summarized in Chapter 1 "Safety."
Safety precautions associated with individual operations or procedures are provided separately, indicated by "▲ WARNING" or "▲ CAUTION."

3. Warning

Items that must be observed for safety when performing endoscopy or electrosurgery are identified by "▲ WARNING" or "▲ CAUTION." Perform procedures correctly by reading and understanding the warning information carefully.

▲ WARNING

Improper use or operation of the equipment may injure patients, physicians, or people in the vicinity.

Read and understand this manual carefully before operating the equipment.

Improper operations that will damage the equipment only are identified by "CAUTION."

CAUTION: Federal law restricts this device to sale by or on the order of a physician

Questions? Contact FDA/CDRH/OCE/DID at CDRH-FOISTATUS@fda.hhs.gov or 301-796-8118

Record processed under FOIA #2015-10057 7/7/16

* From the Cleaning / Disinfection / Storage manual.

9.2 Conditions of Disinfection

Regarding chemicals for use in disinfection, we recommend you to use chemicals listed in Table 9.2. We have confirmed that Endoscopes, biopsy forceps, snares, and the like have resistance to these disinfectants.

If you want to use disinfectants other than those listed here, inquire of us about the resistance of Endoscopes, biopsy forceps, snares, or the like to them beforehand.

In relation to resistance of equipment, use disinfection conditions not severer than those specified in table below.

For effects, dilution, and preparation of chemicals under working conditions shown in table below, refer to manufacturers of respective chemicals. Besides, some chemicals require "precautions in use" or "handling precautions," such as wearing of gloves, to be observed. Refer also to instruction manuals of respective chemicals.

Table 9.2 Chemicals used for disinfection and conditions

Chemicals	Manufacturer	Trade name	How to use	
			Dilution ratio	Duration of effect
Glutaraldehyde*	Maruishi Pharmaceutical Co., Ltd.	Steriscope 3 w/v% solution	Original solution	Max : 25 min. Min : 15 min.
	Johnson & Johnson	Cidex 2.25 w/v% solution	Original solution	Max : 40 min. Min : 30 min.
		Cidex Plus 28 3.5 w/v% solution	Original solution	Max : 30 min. Min : 20 min.
Ohtho-phthalaldehyde*	Johnson & Johnson	CIDEX OPA	Original solution	Max : 15 min. Min : 5 min.

*: ~~An enough sporicidal activity might not be able to be expected in the usage of this table description.~~

REMOVE

23

Questions? Contact FDA/CDRH/OCE/DID at CDRH-FOISTATUS@fda.hhs.gov or 301-796-8118