K103872

SURGIQUEST, INC.
SurgiQuest AirSeal® Optical Trocar & Cannula System with integrated Insufflator
DPIS 2000
510(k) Premarket Notification

MAY 25 2011

510(k) SUMMARY OF SAFETY & EFFECTIVENESS

Submitter:	SurgiQuest, Inc. 12 Cascade Blvd. – Suite 2B Orange, CT 06477
Contact Person:	Daniel Donovan Sr. Dir., Operations Phone: (203) 799-2400 Ext. 202 Fax: (203) 799-2401 e-mail: ddonovan@surgiquest.com
Date Prepared:	December 10, 2010
Trade Name:	SurgiQuest AirSeal® Optical Trocar & Cannula System with integrated Insufflator DPIS 2000 (Trade name subject to change)
Common Name:	Disposable Endoscopic Trocar and Cannula; Carbon Dioxide Insufflator for Laparascopy
Classification Name:	Endoscope and accessories under 21 C.F.R. 876.1500; Laparoscopic Insufflator under 21 C.F.R. 884.1730
Regulatory Class:	II
Product Code:	GCJ and HIF
Predicate Devices:	SurgiQuest AirSeal Optical Trocar & Cannula System, SurgiQuest, Inc., k071571 AirSeal Optical Trocar & Cannula System, SurgiQuest, Inc., k083211 SurgiQuest AirSeal Optical Trocar & Cannula System SurgiQuest, Inc., k092504 45L High Core Insufflator F114 W.O.M. World of Medicine AG, k063367

P. 1/4

Device Description:

The SurgiQuest AirSeal® Optical Trocar & Cannula System with integrated Insufflator DPIS 2000 (the "DPIS 2000 System") consists of the following major components: (1) a trocar, (2) a cannula, (3) tube sets, and (4) a micro-processor controlled insufflation, recirculation and filtration unit (the "DPIS 2000 Unit"). The cannula, trocar and tube sets are sterile, single-use products. The DPIS 2000 Unit is non-sterile and reusable.

The DPIS 2000 Unit is designed to function in one of three (3) separate modes of operation: (a) Insufflation Mode; (b) AirSeal Mode; or (c) Smoke Evacuation Mode.

Intended Use:

The SurgiQuest AirSeal® Optical Trocar & Cannula System with integrated Insufflator DPIS 2000 (the "DPIS 2000 System") is intended for use in diagnostic and/or therapeutic endoscopic procedures to distend the peritoneal cavity by filling it with gas, to establish and maintain a path of entry for endoscopic instruments and to evacuate surgical smoke. The trocar of the DPIS 2000 System is indicated for use with or without visualization.

Substantial Equivalence:

The DPIS 2000 System is substantially equivalent to the AirSeal Predicate Device (k071571, k083211, k092504) and to the Insufflation Predicate Device (k063367). Specifically, the proposed device has the same intended use and the same indication for use as the Predicate Devices. In addition, the DPIS 2000 System and the Predicate Devices use the same or similar basic operating principles and incorporate the same or similar basic design features. Finally, biocompatibility, sterility, packaging and bench testing demonstrate the safety and effectiveness of the proposed device.

Bench test results demonstrate that the DPIS 2000 System is safe and effective in creating and maintaining pneumoperitoneum in all three modes.

The DPIS 2000 Unit has been developed in accordance with 21 CFR 820, ISO 13485:2003 & ISO 14971:2007

and will be tested in accordance with IEC 60601-1, General Requirements for Medical Electrical Equipment - Part 1: General Requirements for Safety and IEC60601-1-2, Medical Electrical Equipment - Part 1-2: General Requirements for Safety - Collateral Standard: Electromagnetic Compatibility - Requirements and Tests.

Gamma sterility validation has been performed (and will be in the case of the Smoke Evacuation Tube Set) in accordance with ISO 11137 Sterilization of health care products – Radiation, Part 1 – Part 3 and AAMI TIR 27, Sterilization of Healthcare Products: Radiation Sterilization - Substantiation of 25kGY as a Sterilization Dose - Method VD Max. ETO sterility validation has been performed ISO 11135-1, Sterilization of health care products –Ethylene Oxide – Part 1: Requirements for the development, validation, and routine control of a sterilization process for medical devices; and ISO 10993-7, Biological Evaluation of Medical Devices – Part 7: Ethylene Oxide sterilization residuals. Residual ethylene oxide (EO) and ethylene chlorohydrin (ECH) data shows that the limit of EO < 5 mg / 10 days and ECH < 5 mg / 10 days that remain on the tube set will not be exceeded.

A sterility assurance level (SAL) is $\leq 10^{-6}$ achieved. The foregoing sterility validation testing will be performed on the Smoke Evacuation Tube Set.

Package and product integrity were tested in accordance with ISO11607-1, Packaging for Terminally Sterilized Medical Devices and ASTM-F-1980-02, Standard for Accelerated Aging of Sterile Medical Device Packages. ISO 11137 -2, Sterilization of health care products -- Radiation -- Part 2: Establishing the sterilization dose.

Finally, biocompatibility testing has been performed on the cannula, the optical trocar, the blunt tipped trocar including fixation device and the AirSeal® Tube Set (and will be in the case of the Smoke Evacuation Tube Set) in accordance with ISO 10993-5, Biological Evaluation of Medical Devices – Part 5: Tests for InVitro Cytotoxicity; ISO 10993-10, Biological Evaluation of Medical Devices – Part 10: Tests for Irritation and Delayed Type

Hypersensitivity,; and ISO 10993-5:2009, Biological Evaluation of Medical Devices – Part 12: Sample Preparation and Reference Material.]

 P4/4

DEPARTMENT OF HEALTH & HUMAN SERVICES

Public Health Service

Food and Drug Administration
10903 New Hampshire Avenue
Document Control Room –WO66-G609
Silver Spring, MD 20993-0002

SurgiQuest, Inc.
% Mr. Daniel Donovan
Sr. Director of Operations
12 Cascade Boulevard, Suite 2B
Orange, Connecticut 06477

MAY 25 2011

Re: K103692
Trade/Device Name: SurgiQuest AirSeal® Optical Trocar & Cannula System with Integrated Insufflator DPIS 2000
Regulation Number: 21 CFR 884.1730
Regulation Name: Laparoscopic insufflator
Regulatory Class: Class II
Product Code: HIF, GCJ
Dated: May 18, 2011
Received: May 19, 2011

Dear Mr. Donovan:

We have reviewed your Section 510(k) premarket notification of intent to market the device referenced above and have determined the device is substantially equivalent (for the indications for use stated in the enclosure) to legally marketed predicate devices marketed in interstate commerce prior to May 28, 1976, the enactment date of the Medical Device Amendments, or to devices that have been reclassified in accordance with the provisions of the Federal Food, Drug, and Cosmetic Act (Act) that do not require approval of a premarket approval application (PMA). You may, therefore, market the device, subject to the general controls provisions of the Act. The general controls provisions of the Act include requirements for annual registration, listing of devices, good manufacturing practice, labeling, and prohibitions against misbranding and adulteration. Please note: CDRH does not evaluate information related to contract liability warranties. We remind you; however, that device labeling must be truthful and not misleading.

If your device is classified (see above) into either class II (Special Controls) or class III (PMA), it may be subject to additional controls. Existing major regulations affecting your device can be found in the Code of Federal Regulations, Title 21, Parts 800 to 898. In addition, FDA may publish further announcements concerning your device in the Federal Register.

Please be advised that FDA's issuance of a substantial equivalence determination does not mean that FDA has made a determination that your device complies with other requirements of the Act or any Federal statutes and regulations administered by other Federal agencies. You must comply with all the Act's requirements, including, but not limited to: registration and listing (21 CFR Part 807); labeling (21 CFR Part 801); medical device reporting (reporting of medical device-related adverse events) (21 CFR 803); good manufacturing practice requirements as set forth in the quality systems (QS) regulation (21 CFR Part 820); and if applicable, the electronic product radiation control provisions (Sections 531-542 of the Act); 21 CFR 1000-1050.

If you desire specific advice for your device on our labeling regulation (21 CFR Part 801), please go to http://www.fda.gov/AboutFDA/CentersOffices/CDRH/CDRHOffices/ucm115809.htm for the Center for Devices and Radiological Health's (CDRH's) Office of Compliance. Also, please note the regulation entitled, "Misbranding by reference to premarket notification" (21CFR Part 807.97). For questions regarding the reporting of adverse events under the MDR regulation (21 CFR Part 803), please go to http://www.fda.gov/MedicalDevices/Safety/ReportaProblem/default.htm for the CDRH's Office of Surveillance and Biometrics/Division of Postmarket Surveillance.

You may obtain other general information on your responsibilities under the Act from the Division of Small Manufacturers, International and Consumer Assistance at its toll-free number (800) 638-2041 or (301) 796-7100 or at its Internet address http://www.fda.gov/MedicalDevices/ResourcesforYou/Industry/default.htm.

Sincerely yours,

Mark N. Melkerson
Director
Division of Surgical, Orthopedic
And Restorative Devices
Office of Device Evaluation
Center for Devices and
Radiological Health

Enclosure

INDICATIONS FOR USE STATMENT

510(k) Number (if known): K103692

Device Name: SurgiQuest AirSeal® Optical Trocar & Cannula System with integrated Insufflator DPIS 2000

Indications for Use:

The SurgiQuest AirSeal ® Optical Trocar & Cannula System with integrated Insufflator DPIS 2000 (the "DPIS 2000 System") is intended for use in diagnostic and/or therapeutic endoscopic procedures to distend the peritoneal cavity by filling it with gas, to establish and maintain a path of entry for endoscopic instruments and to evacuate surgical smoke. The trocar of the DPIS 2000 System is indicated for use with or without visualization.

Prescription Use ___X____ (Part 21 CFR 801 Subpart D) AND/OR Over-The-Counter Use _____ (21 CFR 801 Subpart C)

(PLEASE DO NOT WRITE BELOW THIS LINE-CONTINUE ON ANOTHER PAGE IF NEEDED)

Concurrence of CDRH, Office of Device Evaluation (ODE)

Nil R Patel for MXR
(Division Sign-Off)
Division of Surgical, Orthopedic, and Restorative Devices

510(k) Number K103692

DEPARTMENT OF HEALTH & HUMAN SERVICES

Public Health Service

Food and Drug Administration
10903 New Hampshire Avenue
Document Control Room –WO66-G609
Silver Spring, MD 20993-0002

SurgiQuest, Inc.
% Mr. Daniel Donovan
Sr. Director of Operations
12 Cascade Boulevard, Suite 2B
Orange, Connecticut 06477

MAY 25 2011

Re: K103692
Trade/Device Name: SurgiQuest AirSeal® Optical Trocar & Cannula System with Integrated Insufflator DPIS 2000
Regulation Number: 21 CFR 884.1730
Regulation Name: Laparoscopic insufflator
Regulatory Class: Class II
Product Code: HIF, GCJ
Dated: May 18, 2011
Received: May 19, 2011

Dear Mr. Donovan:

We have reviewed your Section 510(k) premarket notification of intent to market the device referenced above and have determined the device is substantially equivalent (for the indications for use stated in the enclosure) to legally marketed predicate devices marketed in interstate commerce prior to May 28, 1976, the enactment date of the Medical Device Amendments, or to devices that have been reclassified in accordance with the provisions of the Federal Food, Drug, and Cosmetic Act (Act) that do not require approval of a premarket approval application (PMA). You may, therefore, market the device, subject to the general controls provisions of the Act. The general controls provisions of the Act include requirements for annual registration, listing of devices, good manufacturing practice, labeling, and prohibitions against misbranding and adulteration. Please note: CDRH does not evaluate information related to contract liability warranties. We remind you; however, that device labeling must be truthful and not misleading.

If your device is classified (see above) into either class II (Special Controls) or class III (PMA), it may be subject to additional controls. Existing major regulations affecting your device can be found in the Code of Federal Regulations, Title 21, Parts 800 to 898. In addition, FDA may publish further announcements concerning your device in the Federal Register.

Please be advised that FDA's issuance of a substantial equivalence determination does not mean that FDA has made a determination that your device complies with other requirements of the Act or any Federal statutes and regulations administered by other Federal agencies. You must comply with all the Act's requirements, including, but not limited to: registration and listing (21 CFR Part 807); labeling (21 CFR Part 801); medical device reporting (reporting of medical device-related adverse events) (21 CFR 803); good manufacturing practice requirements as set forth in the quality systems (QS) regulation (21 CFR Part 820); and if applicable, the electronic product radiation control provisions (Sections 531-542 of the Act); 21 CFR 1000-1050.

If you desire specific advice for your device on our labeling regulation (21 CFR Part 801), please go to http://www.fda.gov/AboutFDA/CentersOffices/CDRH/CDRHOffices/ucm115809.htm for the Center for Devices and Radiological Health's (CDRH's) Office of Compliance. Also, please note the regulation entitled, "Misbranding by reference to premarket notification" (21CFR Part 807.97). For questions regarding the reporting of adverse events under the MDR regulation (21 CFR Part 803), please go to http://www.fda.gov/MedicalDevices/Safety/ReportaProblem/default.htm for the CDRH's Office of Surveillance and Biometrics/Division of Postmarket Surveillance.

You may obtain other general information on your responsibilities under the Act from the Division of Small Manufacturers, International and Consumer Assistance at its toll-free number (800) 638-2041 or (301) 796-7100 or at its Internet address http://www.fda.gov/MedicalDevices/ResourcesforYou/Industry/default.htm.

Sincerely yours,

Mark N. Melkerson
Director
Division of Surgical, Orthopedic
And Restorative Devices
Office of Device Evaluation
Center for Devices and
Radiological Health

Enclosure

INDICATIONS FOR USE STATMENT

510(k) Number (if known): K103692

Device Name: SurgiQuest AirSeal® Optical Trocar & Cannula System with integrated Insufflator DPIS 2000

Indications for Use:

The SurgiQuest AirSeal ® Optical Trocar & Cannula System with integrated Insufflator DPIS 2000 (the "DPIS 2000 System") is intended for use in diagnostic and/or therapeutic endoscopic procedures to distend the peritoneal cavity by filling it with gas, to establish and maintain a path of entry for endoscopic instruments and to evacuate surgical smoke. The trocar of the DPIS 2000 System is indicated for use with or without visualization.

Prescription Use ___X____ (Part 21 CFR 801 Subpart D) AND/OR Over-The-Counter Use _____ (21 CFR 801 Subpart C)

(PLEASE DO NOT WRITE BELOW THIS LINE-CONTINUE ON ANOTHER PAGE IF NEEDED)

Concurrence of CDRH, Office of Device Evaluation (ODE)

Nikki Dyer for MXR
(Division Sign-Off)
Division of Surgical, Orthopedic, and Restorative Devices

510(k) Number K103692

DEPARTMENT OF HEALTH & HUMAN SERVICES **Public Health Service**

U.S. Food and Drug Administration
Center for Devices and Radiological Health
Document Control Center WO66-G609
10903 New Hampshire Avenue
Silver Spring, MD 20993-0002

May 19, 2011

SURGIQUEST, INC.
12 CASCADE BLVD.
SUITE 2B
ORANGE, CONNECTICUT 06477
ATTN: DANIEL DONOVAN

510k Number: K103692

Product: SUGIQUEST AIRSEALOPTICAL

The additional information you have submitted has been received.

We will notify you when the processing of this submission has been completed or if any additional information is required. Pleaseremember that all correspondence concerning your submission MUST be sent to the Document Mail Center at the above letterhead address. Correspondence sent to any address other than the one above will not be considered as part of your official premarket notification submission. Also, please note the new Blue Book Memorandum regarding Fax and E-mail Policy entitled, "Fax and E-Mail Communication with Industry about Premarket Files Under Review. Please refer to this guidance for information on current fax and e-mail practices at http://www.fda.gov/MedicalDevices/DeviceRegulationandGuidance/GuidanceDocuments/ucm089402.htm. On August 12, 2005 CDRH issued the Guidance for Industry and FDA Staff: Format for Traditional and Abbreviated 510(k)s. This guidance can be found at http://www.fda.gov/MedicalDevices/DeviceRegulationandGuidance/GuidanceDocuments/ucm084365.htm. Please refer to this guidance for assistance on how to format an original submission for a Traditional or Abbreviated 510(k).

The Safe Medical Devices Act of 1990, signed on November 28, states that you may not place this device into commercial distribution until you receive a letter from FDA allowing you to do so. As in the past, we intend to complete our review as quickly as possible. Generally we do so in 90 days. However, the complexity of a submission or a requirement for additional information may occasionally cause the review to extend beyond 90 days. Thus, if you have not received a written decision or been contacted within 90 days of our receipt date you may want to check with FDA to determine the status of your submission.

Please ensure that whether you submit a 510(k) Summary as per 21 CFR 807.92, or a 510(k) Statement as per 21 CFR 807.93, it meets the content and format regulatory requirements.

If you have procedural questions, please contact the Division of Small Manufacturers International and Consumer Assistance (DSMICA) at (301)796-7100 or at their toll-free number (800)638-2041, or contact the 510k staff at (301)796-5640.

Sincerely,

510(k) Staff

DEPARTMENT OF HEALTH & HUMAN SERVICES **Public Health Service**

U.S. Food and Drug Administration
Center for Devices and Radiological Health
Document Control Center WO66-G609
10903 New Hampshire Avenue
Silver Spring, MD 20993-0002

April 25, 2011

SURGIQUEST, INC.
12 CASCADE BLVD.
SUITE 2B
ORANGE, CONNECTICUT 06477
ATTN: DANIEL DONOVAN

510k Number: K103692
Product: SUGIQUEST AIRSEALOPTICAL TROCA

We are holding your above-referenced Premarket Notification (510(k)) for 30 days pending receipt of the additional information that was requested by the Office of Device Evaluation. Please remember that all correspondence concerning your submission MUST cite your 510(k) number and be sent in duplicate to the Document Mail Center at the above letterhead address. Correspondence sent to any address other than the one above will not be considered as part of your official premarket notification submission. Also, please note the new Blue Book Memorandum regarding Fax and E-mail Policy entitled, "Fax and E-Mail Communication with Industry about Premarket Files Under Review. Please refer to this guidance for information on current fax and e-mail practices at http://www.fda.gov/MedicalDevices/DeviceRegulationandGuidance/GuidanceDocuments/ucm089402.htm.

The deficiencies identified represent the issues that we believe need to be resolved before our review of your 510(k) submission can be successfully completed. In developing the deficiencies, we carefully considered the statutory criteria as defined in Section 513(i) of the Federal Food, Drug, and Cosmetic Act for determining substantial equivalence of your device. We also considered the burden that may be incurred in your attempt to respond to the deficiencies. We believe that we have considered the least burdensome approach to resolving these issues. If, however, you believe that information is being requested that is not relevant to the regulatory decision or that there is a less burdensome way to resolve the issues, you should follow the procedures outlined in the "A Suggested Approach to Resolving Least Burdensome Issues" document. It is available on our Center web page at: http://www.fda.gov/MedicalDevices/DeviceRegulationandGuidance/Overview/MedicalDeviceProvisionsofFDAModernizationAct/ucm136685.htm.

If after 30 days the additional information (AI), or a request for an extension of time, is not received, we will discontinue review of your submission and proceed to delete your file from our review system (21 CFR 807.87(l)). Please note our guidance document entitled, "Guidance for Industry and FDA Staff, FDA and Industry Actions on Premarket Notification (510(k)) Submissions: Effect on FDA Review Clock and Performance Assessment". If the submitter does submit a written request for an extension, FDA will permit the 510(k) to remain on hold for up to a maximum of 180 days from the date of the AI request. The purpose of this document is to assist agency staff and the device industry in understanding how various FDA and industry actions that may be taken on 510(k)s should affect the review clock for purposes of meeting the Medical Device User Fee and Modernization Act. You may review this document at http://www.fda.gov/MedicalDevices/DeviceRegulationandGuidance/GuidanceDocuments/ucm089735.htm. Pursuant to 21 CFR 20.29, a copy of your 510(k) submission will remain in the Office of Device Evaluation. If you then wish to resubmit this 510(k) notification, a new number will be assigned and your submission will be considered a new premarket notification submission.

Please remember that the Safe Medical Devices Act of 1990 states that you may not place this device into commercial distribution until you receive a decision letter from FDA allowing you to do so.

If you have procedural questions, please contact the Division of Small Manufacturers International and Consumer Assistance (DSMICA) at (301)796-7100 or at their toll-free number (800)638-2041, or contact the 510k staff at (301)796-5640.

Sincerely yours,

Marjorie Shulman
Consumer Safety Officer
Premarket Notification Section
Office of Device Evaluation
Center for Devices and Radiological Health

DEPARTMENT OF HEALTH & HUMAN SERVICES Public Health Service

U.S. Food and Drug Administration
Center for Devices and Radiological Health
Document Control Center WO66-G609
10903 New Hampshire Avenue
Silver Spring, MD 20993-0002

March 31, 2011

SURGIQUEST, INC.
12 CASCADE BLVD.
SUITE 2B
ORANGE, CONNECTICUT 06477
ATTN: DANIEL DONOVAN

510k Number: K103692

Product: SUGIQUEST AIRSEALOPTICAL

The additional information you have submitted has been received.

We will notify you when the processing of this submission has been completed or if any additional information is required. Pleaseremember that all correspondence concerning your submission MUST be sent to the Document Mail Center at the above letterhead address. Correspondence sent to any address other than the one above will not be considered as part of your official premarket notification submission. Also, please note the new Blue Book Memorandum regarding Fax and E-mail Policy entitled, "Fax and E-Mail Communication with Industry about Premarket Files Under Review. Please refer to this guidance for information on current fax and e-mail practices at http://www.fda.gov/MedicalDevices/DeviceRegulationandGuidance/GuidanceDocuments/ucm089402.htm. On August 12, 2005 CDRH issued the Guidance for Industry and FDA Staff: Format for Traditional and Abbreviated 510(k)s. This guidance can be found at http://www.fda.gov/MedicalDevices/DeviceRegulationandGuidance/GuidanceDocuments/ucm084365.htm. Please refer to this guidance for assistance on how to format an original submission for a Traditional or Abbreviated 510(k).

The Safe Medical Devices Act of 1990, signed on November 28, states that you may not place this device into commercial distribution until you receive a letter from FDA allowing you to do so. As in the past, we intend to complete our review as quickly as possible. Generally we do so in 90 days. However, the complexity of a submission or a requirement for additional information may occasionally cause the review to extend beyond 90 days. Thus, if you have not received a written decision or been contacted within 90 days of our receipt date you may want to check with FDA to determine the status of your submission.

Please ensure that whether you submit a 510(k) Summary as per 21 CFR 807.92, or a 510(k) Statement as per 21 CFR 807.93, it meets the content and format regulatory requirements.

If you have procedural questions, please contact the Division of Small Manufacturers International and Consumer Assistance (DSMICA) at (301)796-7100 or at their toll-free number (800)638-2041, or contact the 510k staff at (301)796-5640.

Sincerely,

510(k) Staff

DEPARTMENT OF HEALTH & HUMAN SERVICES **Public Health Service**

U.S. Food and Drug Administration
Center for Devices and Radiological Health
Document Control Center WO66-G609
10903 New Hampshire Avenue
Silver Spring, MD 20993-0002

February 15, 2011

SURGIQUEST, INC.
12 CASCADE BLVD.
SUITE 2B
ORANGE, CONNECTICUT 06477
ATTN: DANIEL DONOVAN

510k Number: K103692

Product: SUGIQUEST AIRSEALOPTICAL TROCA

Extended Until: 03/30/2011

Based on your recent request, an extension of time has been granted for you to submit the additional information we requested.

If the additional information (AI) is not received by the "Extended Until" date shown above, your premarket notification will be considered withdrawn (21 CFR 807.87(l)). If the submitter does submit a written request for an extension, FDA will permit the 510(k) to remain on hold for up to a maximum of 180 days from the date of the AI request.

If you have procedural questions, please contact the Division of Small Manufacturers International and Consumer Assistance (DSMICA) at (301)796-7100 or at their toll-free number (800)638-2041, or contact the 510k staff at (301)796-5640.

Sincerely yours,

Marjorie Shulman
Consumer Safety Officer
Premarket Notification Section
Office of Device Evaluation
Center for Devices and Radiological Health

SURGIQUEST

FDA CDRH DMC
FEB 14 2011
Received

Food and Drug Administration
Center for Devices and Radiological Health
Document Mail Center – WO66-G607
10903 New Hampshire Avenue
Silver Spring, MD 20993-0002

February 11, 2011

Re.: **K103692**
SurgiQuest AirSeal® Optical Trocar & Cannula System with integrated Insufflator DPIS 2000
Request for an Extension of Time

Dear Mr. Yen,

In response to your fax dated January 20, 2011 requesting additional information regarding the 510(k) application for the SurgiQuest AirSeal® Optical Trocar & Cannula System with integrated Insufflator DPIS 2000 (K103692), I hereby request an extension of time until March 30, 2011 to respond.

Thank you.

Sincerely,

Daniel Donovan

K-56

12 Cascade Boulevard, Suite 2B | Orange, CT 06477 | 203.799.2400 T | 203.799.2401 F

35

DEPARTMENT OF HEALTH & HUMAN SERVICES **Public Health Service**

U.S. Food and Drug Administration
Center for Devices and Radiological Health
Document Mail Center ¿ WO66-G609
10903 New Hampshire Avenue
Silver Spring, MD 20993-0002

January 21, 2011

510k Number: K103692
Product: SUGIQUEST AIRSEALOPTICAL TROCA

SURGIQUEST, INC.
12 CASCADE BLVD. SUITE 2B
ORANGE, CONNECTICUT 06477
UNITED STATES
ATTN: DANIEL DONOVAN

We are holding your above-referenced Premarket Notification (510(k)) for 30 days pending receipt of the additional information that was requested by the Office of Device Evaluation. Please remember that all correspondence concerning your submission MUST cite your 510(k) number and be sent in duplicate to the Document Mail Center at the above letterhead address. Correspondence sent to any address other than the one above will not be considered as part of your official premarket notification submission. Also, please note the new Blue Book Memorandum regarding Fax and E-mail Policy entitled, "Fax and E-Mail Communication with Industry about Premarket Files Under Review. Please refer to this guidance for information on current fax and e-mail practices at http://www.fda.gov/MedicalDevices/DeviceRegulationandGuidance/GuidanceDocuments/ucm089402.htm.

The deficiencies identified represent the issues that we believe need to be resolved before our review of your 510(k) submission can be successfully completed. In developing the deficiencies, we carefully considered the statutory criteria as defined in Section 513(i) of the Federal Food, Drug, and Cosmetic Act for determining substantial equivalence of your device. We also considered the burden that may be incurred in your attempt to respond to the deficiencies. We believe that we have considered the least burdensome approach to resolving these issues. If, however, you believe that information is being requested that is not relevant to the regulatory decision or that there is a less burdensome way to resolve the issues, you should follow the procedures outlined in the "A Suggested Approach to Resolving Least Burdensome Issues" document. It is available on our Center web page at: http://www.fda.gov/MedicalDevices/DeviceRegulationandGuidance/Overview/MedicalDeviceProvisionsofFDAModernizationAct/ucm136685.htm.

If after 30 days the additional information (AI), or a request for an extension of time, is not received, we will discontinue review of your submission and proceed to delete your file from our review system (21 CFR 807.87(l)). Please note our guidance document entitled, "Guidance for Industry and FDA Staff, FDA and Industry Actions on Premarket Notification (510(k)) Submissions: Effect on FDA Review Clock and Performance Assessment". If the submitter does submit a written request for an extension, FDA will permit the 510(k) to remain on hold for up to a maximum of 180 days from the date of the AI request. The purpose of this document is to assist agency staff and the device industry in understanding how various FDA and industry actions that may be taken on 510(k)s should affect the review clock for purposes of meeting the Medical Device User Fee and Modernization Act. You may review this document at http://www.fda.gov/MedicalDevices/DeviceRegulationandGuidance/GuidanceDocuments/ucm089735.htm. Pursuant to 21 CFR 20.29, a copy of your 510(k) submission will remain in the Office of Device Evaluation. If you then wish to resubmit this 510(k) notification, a new number will be assigned and your submission will be considered a new premarket notification submission.

Please remember that the Safe Medical Devices Act of 1990 states that you may not place this device into commercial distribution until you receive a decision letter from FDA allowing you to do so.

If you have procedural questions, please contact the Division of Small Manufacturers International and Consumer Assistance (DSMICA) at (301)796-7100 or at their toll-free number (800)638-2041, or contact the 510k staff at (301)796-5640.

Sincerely yours,

Marjorie Shulman
Consumer Safety Officer
Premarket Notification Section
Office of Device Evaluation
Center for Devices and Radiological Health

DEPARTMENT OF HEALTH & HUMAN SERVICES **Public Health Service**

U.S. Food and Drug Administration
Center for Devices and Radiological Health
Document Mail Center ¿ WO66-G609
10903 New Hampshire Avenue
Silver Spring, MD 20993-0002

December 21, 2010

SURGIQUEST, INC.
12 CASCADE BLVD. SUITE 2B
ORANGE, CONNECTICUT 06477
UNITED STATES
ATTN: DANIEL DONOVAN

510k Number: K103692
Received: 12/17/2010
Product: SUGIQUEST AIRSEALOPTICAL TROCA

The Food and Drug Administration (FDA), Center for Devices and Radiological Health (CDRH), has received the Premarket Notification, (510(k)), you submitted in accordance with Section 510(k) of the Federal Food, Drug, and Cosmetic Act(Act) for the above referenced product and for the above referenced 510(k) submitter. Please note, if the 510(k) submitter is incorrect, please notify the 510(k) Staff immediately. We have assigned your submission a unique 510(k) number that is cited above. Please refer prominently to this 510(k) number in all future correspondence that relates to this submission. We will notify you when the processing of your 510(k) has been completed or if any additional information is required. YOU MAY NOT PLACE THIS DEVICE INTO COMMERCIAL DISTRIBUTION UNTIL YOU RECEIVE A LETTER FROM FDA ALLOWING YOU TO DO SO.

Please remember that all correspondence concerning your submission MUST be sent to the Document Mail Center (DMC) at the above letterhead address. Correspondence sent to any address other than the one above will not be considered as part of your official 510(k) submission.

On September 27, 2007, the President signed an act reauthorizing medical device user fees for fiscal years 2008 - 2012. The legislation - the Medical Device User Fee Amendments of 2007 is part of a larger bill, the Food and Drug Amendments Act of 2007. Please visit our website at http://www.fda.gov/MedicalDevices/DeviceRegulationandGuidance/Overview/MedicalDeviceUserFeeandModernizationActMDUFMA/default.htm for more information regarding fees and FDA review goals. In addition, effective January 2, 2008, any firm that chooses to use a standard in the review of ANY new 510(k) needs to fill out the new standards form (Form 3654) and submit it with their 510(k). The form may be found at http://www.fda.gov/AboutFDA/ReportsManualsForms/Forms/default.htm.

We remind you that Title VIII of the Food and Drug Administration Amendments Act of 2007 (FDAAA) amended the PHS Act by adding new section 402(j) (42 U.S.C. § 282(j)), which expanded the current database known as ClinicalTrials.gov to include mandatory registration and reporting of results for applicable clinical trials of human drugs (including biological products) and devices. Section 402(j) requires that a certification form http://www.fda.gov/AboutFDA/ReportsManualsForms/Forms/default.htm accompany 510(k)/HDE/PMA submissions. The agency has issued a draft guidance titled: "Certifications To Accompany Drug, Biological

Product, and Device Applications/Submissions: Compliance with Section 402(j) of The Public Health Service Act, Added By Title VIII of The Food and Drug Administration Amendments Act of 2007" http://www.fda.gov/MedicalDevices/DeviceRegulationandGuidance/HowtoMarketYourDevice/PremarketSubmissions/PremarketNotification510k/ucm134034.htm. According to the draft guidance, 510(k) submissions that do not contain clinical data do not need the certification form.

Please note the following documents as they relate to 510(k) review: 1) Guidance for Industry and FDA Staff entitled, "Interactive Review for Medical Device Submissions: 510(k)s, Original PMAs, PMA Supplements, Original BLAs and BLA Supplements". This guidance can be found at http://www.fda.gov/MedicalDevices/DeviceRegulationandGuidance/GuidanceDocuments/ucm089402.htm. Please refer to this guidance for information on a formalized interactive review process. 2) Guidance for Industry and FDA Staff entitled, "Format for Traditional and Abbreviated 510(k)s". This guidance can be found at http://www.fda.gov/MedicalDevices/DeviceRegulationandGuidance/GuidanceDocuments/ucm084365.htm. Please refer to this guidance for assistance on how to format an original submission for a Traditional or Abbreviated 510(k).

In all future premarket submissions, we encourage you to provide an electronic copy of your submission. By doing so, you will save FDA resources and may help reviewers navigate through longer documents more easily. Under CDRH's e-Copy Program, you may replace one paper copy of any premarket submission (e.g., 510(k), IDE, PMA, HDE) with an electronic copy. For more information about the program, including the formatting requirements, please visit our web site at http://www.fda.gov/MedicalDevices/DeviceRegulationandGuidance/HowtoMarketYourDevice/PremarketSubmissions/ucm134508.html. In addition, the 510(k) Program Video is now available for viewing on line at http://www.fda.gov/MedicalDevices/DeviceRegulationandGuidance/HowtoMarketYourDevice/PremarketSubmissions/PremarketNotification510k/ucm070201.htm .

Please ensure that whether you submit a 510(k) Summary as per 21 CFR 807.92, or a 510(k) Statement as per 21 CFR 807.93, it meets the content and format regulatory requirements.

Lastly, you should be familiar with the regulatory requirements for medical devices available at Device Advice http://www.fda.gov/MedicalDevices/DeviceRegulationandGuidance/default.htm. If you have questions on the status of your submission, please contact DSMICA at (301)796-7100 or the toll-free number (800)638-2041 , or at their internet address http://www.fda.gov/MedicalDevices/DeviceRegulationandGuidance/default.htm. If you have procedural questions, please contact the 510(k) Staff at (301)796-5640.

Sincerely,

510(k) Staff

K103692

SURGIQUEST

U.S. Food and Drug Administration
Center for Devices and Radiological Health
Document Mail Center – WO66-G609
10903 New Hampshire Avenue
Silver Spring, MD 20993-0002

K-4

CONFIDENTIAL **Date: December 10, 2010**

Reference: 510(k) Notification (Traditional)
SurgiQuest AirSeal® Optical Trocar & Cannula System with integrated Insufflator DPIS 2000

To Whom It May Concern,

Please find enclosed one original and one electronic copy of a traditional section 510(k) premarket notification for the SurgiQuest AirSeal® Optical Trocar & Cannula System with integrated Insufflator DPIS 2000 (the "DPIS 2000 System"). The DPIS 2000 System is intended for use in diagnostic and/or therapeutic endoscopic procedures to distend a cavity by filling it with gas, to establish and maintain a path of entry for endoscopic instruments and to evacuate surgical smoke. It is indicated to facilitate the use of various laparoscopic instruments by filling the peritoneal cavity with gas to distend it, by creating and maintaining a gas sealed obstruction-free instrument path and by evacuating surgical smoke. The trocar of the DPIS 2000 is indicated for use with or without visualization.

The DPIS 2000 System is classified under 21 C.F.R. 884.1730 and 21 C.F.R. 876.1500 as a class II device. The product code for endoscopes and accessories is GCJ and the product code for laparoscopic insufflators is HIF. The review panel for the DPIS 2000 System is General & Plastic Surgery.

12 Cascade Boulevard, Suite 2B | Orange, CT 06477 | 203.799.2400 T | 203.799.2401 F

The DPIS 2000 System is a combination of two previously cleared products. Specifically, the DPIS 2000 System incorporates into a single system the gas seal technology of the SurgiQuest AirSeal Optical Trocar & Cannula System, manufactured by SurgiQuest, Inc., that has been cleared by FDA on July 30, 2007 (k071571), on December 15, 2008 (k083211) and on November 11, 2009 (k092504) (the "AirSeal Predicate Devices"), and the insufflation technology of the 45 L High Flow Insufflator F114, manufactured by W.O.M. World of Medicine AG, that has been cleared by FDA on May 23, 2006 (k063367) (the "Insufflator Predicate Device" and, together with the AirSeal Predicate Devices, the "Predicate Devices").

The DPIS 2000 System consists of the following major components: (1) the trocar, (2) the cannula, (3) the filtered tube sets, and (4) a micro-processor controlled insufflation, recirculation and filtration unit (the "DPIS 2000 Unit"). The cannula, trocar and filtered tube sets are sterile, single-use products. The DPIS 2000 Unit is active, non-sterile and reusable. The DPIS 2000 Unit is a microprocessor controlled device that is designed to function in one of three (3) separate modes of operation: (a) Insufflation Mode; (b) AirSeal Mode; or (c) Smoke Evacuation Mode.

In the Insufflation Mode, the DPIS 2000 System functions exclusively as a traditional laparoscopic insufflator and is used with standard veress needles and/or cannulae and the Insufflation Tube Set.

In the AirSeal Mode, the DPIS 2000 System functions as a traditional laparoscopic insufflator in the initial insufflation phase and subsequently used with the AirSeal Tube Set, Trocar and Cannula to create a "pressure barrier" or state of equilibrium within the bore of the cannula tube. This pressure barrier, which is created within the cannula using an uninterrupted flow of gas, allows the free passage of various tools (graspers, clip appliers, etc.) into and out of the abdominal cavity while at the same time maintaining insufflation pressures (i.e. pneumoperitoneum) within the abdomen.. [Note: the means of creating and maintaining this barrier has been described previously in the 510(k)'s sighted above]

In the Smoke Evacuation Mode, the DPIS 2000 System functions as a traditional laparoscopic insufflator and is also used with the Smoke Evacuation Tube Set and two traditional laparoscopic trocars to perform a smoke evacuation function.

In accordance with the guidance "Format for Traditional and Abbreviated 510(k)'s", issued on August 12, 2005, please find below a table describing the design and use of the DPIS System:

Question	Yes	No
Is the device intended for prescription use (21 CFR 801 Subpart D)?	X	
Is the device intended for over-the-counter use (21 CFR 807 Subpart C)?		X
Does the device contain components derived from a tissue or other biologic source?		X
Is the device provided sterile? Yes, cannula, trocars and tube sets.	X	
Is the device intended for single use? Yes, cannula, trocars and tube sets.	X	
Is the device a reprocessed single use device?		X
If yes, does this device type require reprocessed validation data?		X
Does the device contain a drug?		X
Does the device contain a biologic?		X
Does the device use software? Yes, insufflation, recirculation and filtration unit.	X	
Does the device include clinical information?		X
Is the device implanted?		X

As explained in more detail in the attached 510(k) notice, the DPIS 2000 System is a coincident placement of two previously cleared technologies into the same enclosure subsystem and therefore substantially equivalent to the AirSeal Predicate Device and to the Insufflator Predicate Device. Specifically, the proposed device has the same intended use and the same indication for use as the Predicate Devices. In addition, the DPIS 2000 System and the Predicate Devices use the same

or similar basic operating principles and incorporate the same or similar basic design features. Additionally, the Optical Trocar, the Blunt Tip Trocar including fixation device and the Cannula of the proposed device are identical in technology, design and material to the trocars, fixation device and cannula of the AirSeal Predicate Device. Furthermore, the AirSeal filtered Tube Set modules are substantially equivalent to the tube sets used with the AirSeal Predicate Device. (b)(4) [redacted] (b)(4) (b)(4) [redacted] which is designed to prevent backflow of fluids into the DPIS200 unit. The Smoke Evacuation Tube Set is similar in technology, design and material to the tube set cleared with the AirSeal Predicate Devices. The Smoke Evacuation Tube Set is designed to deliver CO_2 for the creation and maintenance of pneumoperitoneum and to evacuate and filter surgical smoke.

The fundamental technology of the DPIS 2000 System used to (a)create and maintain pneumoperitoneum, (b)create and maintain a seal in the Cannula and (3) to evacuate smoke, is substantially equivalent to the fundamental technology used by the Predicate Device. The principle distinction between the subject device and the Predicate Device is the amalgamation of the two technologies into one unified system, the improvement to the combined device with regard to safety and alarm features and improvements in terms of user interface and design for human factors.

In accordance with the Medical Device User Fee and Modernization Act of 2002, SurgiQuest, Inc. has submitted the application fee of $2,174 required of a certified small business. A copy of the User Fee Cover Sheet is provided within the premarket notification.

The Establishment Registration number for SurgiQuest, Inc. is 3006217371. Small Business Decision Number is SBD118252.

Information regarding this device, its testing, composition, features, manufacture, etc. has been kept confidential by SurgiQuest, Inc. Such information has been made available only to SurgiQuest's employees and consultants. We request that such information remain confidential throughout the 510(k) review

process. Furthermore, portions of the material in this application may be trade secret or confidential commercial or financial information within the meaning of 21 C.F.R. § 20.61 and therefore not subject to disclosure under the Freedom of Information Act, even after the existence of the application becomes public. Additionally, any claim of substantial equivalence is made exclusively in the context of the Food, Drug and Cosmetic Act and should not be interpreted in any other regard. In accordance with http://www.fda.gov/MedicalDevices/DeviceRegulationandGuidance/HowtoMarketYourDevice/PremarketSubmissions/ucm134508.html, an electronic copy is being provided with this submission and it is an exact duplicate of the original paper submission.

We trust that the information provided in the attached 510(k) notice is sufficient for FDA to find the DPIS 2000 System substantially equivalent to its Predicate Devices.

Any questions or correspondence regarding this submission should be directed to:

Daniel Donovan
Sr. Dir., Operations, SurgiQuest, Inc.
12 Cascade Blvd. – Suite 2B
Orange, CT 06477
Phone: (203) 799-2400 Ext. 202
Fax: (203) 799-2401
E-mail: ddonovan@surgiquest.com.

We thank the Agency for its review of this submission.

Sincerely,

Kourosh Azarbarzin

Founder & C.E.O., SurgiQuest, Inc.

SurgiQuest, Inc.

SurgiQuest AirSeal® Optical Trocar & Cannula System with integrated Insufflator DPIS 2000

510(k) Premarket Notification
Traditional

TABLE OF CONTENTS

1. Medical Device User Fee Cover Sheet

Please refer to the attached Medical Device User Fee Cover Sheet.

Form Approved: OMB No. 0910-511 Expiration Date: January 31, 2010. See Instructions for OMB Statement.

DEPARTMENT OF HEALTH AND HUMAN SERVICES
FOOD AND DRUG ADMINISTRATION
MEDICAL DEVICE USER FEE COVER SHEET

PAYMENT IDENTIFICATION NUMBER: (b)(4) [redacted]
Write the Payment Identification number on your check.

A completed cover sheet must accompany each original application or supplement subject to fees. If payment is sent by U.S. mail or courier, please include a copy of this completed form with payment. Payment and mailing instructions can be found at: http://www.fda.gov/oc/mdufma/coversheet.html

1. COMPANY NAME AND ADDRESS (include name, street address, city state, country, and post office code)

SURGIQUEST INCORPORATED
12 Cascade Blvd, Suite 2B
Orange CT 06477
US

1.1 EMPLOYER IDENTIFICATION NUMBER (EIN)
*****8848

2. CONTACT NAME
Daniel Donovon

2.1 E-MAIL ADDRESS
ddonovan@surgiquest.com

2.2 TELEPHONE NUMBER (include Area code)
203-7992400 202

2.3 FACSIMILE (FAX) NUMBER (Include Area code)
203-7992401

3. TYPE OF PREMARKET APPLICATION (Select one of the following in each column; if you are unsure, please refer to the application descriptions at the following web site: http://www.fda.gov/oc/mdufma

Select an application type:
[X] Premarket notification(510(k)); except for third party
[ ] 513(g) Request for Information
[ ] Biologics License Application (BLA)
[ ] Premarket Approval Application (PMA)
[ ] Modular PMA
[ ] Product Development Protocol (PDP)
[ ] Premarket Report (PMR)
[ ] Annual Fee for Periodic Reporting (APR)
[ ] 30-Day Notice

3.1 Select a center
[X] CDRH
[ ] CBER

3.2 Select one of the types below
[X] Original Application
Supplement Types:
[ ] Efficacy (BLA)
[ ] Panel Track (PMA, PMR, PDP)
[ ] Real-Time (PMA, PMR, PDP)
[ ] 180-day (PMA, PMR, PDP)

4. ARE YOU A SMALL BUSINESS? (See the instructions for more information on determining this status)
[X] YES, I meet the small business criteria and have submitted the required qualifying documents to FDA
NO, I am not a small business

4.1 If Yes, please enter your Small Business Decision Number: SBD118252

5. FDA WILL NOT ACCEPT YOUR SUBMISSION IF YOUR COMPANY HAS NOT PAID AN ESTABLISHMENT REGISTRATION FEE THAT IS DUE TO FDA. HAS YOUR COMPANY PAID ALL ESTABLISHMENT REGISTRATION FEES THAT ARE DUE TO FDA?
[X] YES (All of our establishments have registered and paid the fee, or this is our first device, and we will register and pay the fee within 30 days of FDA's approval/clearance of this device.)
[ ] NO (If "NO," FDA will not accept your submission until you have paid all fees due to FDA. This submission will not be processed; see http://www.fda.gov/cdrh/mdufma for additional information)

6. IS THIS PREMARKET APPLICATION COVERED BY ANY OF THE FOLLOWING USER FEE EXCEPTIONS? IF SO, CHECK THE APPLICABLE EXCEPTION.
[ ] This application is the first PMA submitted by a qualified small business, including any affiliates
[ ] This biologics application is submitted under section 351 of the Public Health Service Act for a product licensed for further manufacturing use only
[ ] The sole purpose of the application is to support conditions of use for a pediatric population
[ ] The application is submitted by a state or federal government entity for a device that is not to be distributed commercially

7. IS THIS A SUPPLEMENT TO A PREMARKET APPLICATION FOR WHICH FEES WERE WAIVED DUE TO SOLE USE IN A PEDIATRIC POPULATION THAT NOW PROPOSES CONDITION OF USE FOR ANY ADULT POPULATION? (If so, the application is subject to the fee that applies for an original premarket approval application (PMA).

[ ] YES [X] NO

8. USER FEE PAYMENT AMOUNT SUBMITTED FOR THIS PREMARKET APPLICATION
(b)(4) [redacted] 19-Nov-2010

Form FDA 3601 (01/2007)

"Close Window" Print Cover sheet

11/19/10

2. CDRH Premarket Review Submission Cover Sheet

Please refer to the attached CDRH Premarket Review Submission Cover Sheet.

DEPARTMENT OF HEALTH AND HUMAN SERVICES
FOOD AND DRUG ADMINISTRATION

CDRH PREMARKET REVIEW SUBMISSION COVER SHEET

Form Approval
OMB No. 0910-0120
Expiration Date: August 31, 2010.
See OMB Statement on page 5.

Date of Submission	User Fee Payment ID Number	FDA Submission Document Number *(if known)*
December [ ], 2010	(b)(4) [redacted]	

SECTION A — TYPE OF SUBMISSION

PMA	PMA & HDE Supplement	PDP	510(k)	Meeting
☐ Original Submission	☐ Regular (180 day)	☐ Original PDP	☒ Original Submission:	☐ Pre-510(K) Meeting
☐ Premarket Report	☐ Special	☐ Notice of Completion	☒ Traditional	☐ Pre-IDE Meeting
☐ Modular Submission	☐ Panel Track (PMA Only)	☐ Amendment to PDP	☐ Special	☐ Pre-PMA Meeting
☐ Amendment	☐ 30-day Supplement		☐ Abbreviated (Complete section I, Page 5)	☐ Pre-PDP Meeting
☐ Report	☐ 30-day Notice		☐ Additional Information	☐ Day 100 Meeting
☐ Report Amendment	☐ 135-day Supplement		☐ Third Party	☐ Agreement Meeting
☐ Licensing Agreement	☐ Real-time Review			☐ Determination Meeting
	☐ Amendment to PMA & HDE Supplement			☐ Other *(specify)*:
	☐ Other			

IDE	Humanitarian Device Exemption (HDE)	Class II Exemption Petition	Evaluation of Automatic Class III Designation (De Novo)	Other Submission
☐ Original Submission	☐ Original Submission	☐ Original Submission	☐ Original Submission	☐ 513(g)
☐ Amendment	☐ Amendment	☐ Additional Information	☐ Additional Information	☐ Other *(describe submission)*:
☐ Supplement	☐ Supplement			
	☐ Report			
	☐ Report Amendment			

Have you used or cited Standards in your submission? ☒ Yes ☐ No *(If Yes, please complete Section I, Page 5)*

SECTION B — SUBMITTER, APPLICANT OR SPONSOR

Company / Institution Name: SurgiQuest Inc.	Establishment Registration Number *(if known)*: 3006217371		
Division Name *(if applicable)*: n/a	Phone Number *(including area code)*: (203) 799-2400 Ext. 202		
Street Address: 12 Cascade Blvd. - Suite 2B	FAX Number *(including area code)*: (203) 799-2401		
City: Orange	State / Province: CT	ZIP/Postal Code: 06477	Country: USA
Contact Name: Daniel Donovan			
Contact Title: Sr. Dir., Operations	Contact E-mail Address: DDonovan@surgiquest.com		

SECTION C — APPLICATION CORRESPONDENT (e.g., consultant, if different from above)

Company / Institution Name:			
Division Name *(if applicable)*:	Phone Number *(including area code)*:		
Street Address:	FAX Number *(including area code)*:		
City:	State / Province:	ZIP Code:	Country:
Contact Name:			
Contact Title:	Contact E-mail Address:		

PSC Graphics (301) 443-1090 EF

SECTION D1 — REASON FOR APPLICATION - PMA, PDP, OR HDE

- ☐ New Device
- ☐ Withdrawal
- ☐ Additional or Expanded Indications
- ☐ Request for Extension
- ☐ Post-approval Study Protocol
- ☐ Request for Applicant Hold
- ☐ Request for Removal of Applicant Hold
- ☐ Request to Remove or Add Manufacturing Site

- ☐ Change in design, component, or specification:
  - ☐ Software / Hardware
  - ☐ Color Additive
  - ☐ Material
  - ☐ Specifications
  - ☐ Other *(specify below)*

- ☐ Location change:
  - ☐ Manufacturer
  - ☐ Sterilizer
  - ☐ Packager

- ☐ Report Submission:
  - ☐ Annual or Periodic
  - ☐ Post-approval Study
  - ☐ Adverse Reaction
  - ☐ Device Defect
  - ☐ Amendment

- ☐ Process change:
  - ☐ Manufacturing ☐ Packaging
  - ☐ Sterilization
  - ☐ Other *(specify below)*

- ☐ Labeling change:
  - ☐ Indications
  - ☐ Instructions
  - ☐ Performance Characteristics
  - ☐ Shelf Life
  - ☐ Trade Name
  - ☐ Other *(specify below)*

- ☐ Change in Ownership
- ☐ Change in Correspondent
- ☐ Change of Applicant Address

- ☐ Response to FDA correspondence:

- ☐ Other Reason *(specify)*:

SECTION D2 — REASON FOR APPLICATION - IDE

- ☐ New Device
- ☐ New Indication
- ☐ Addition of Institution
- ☐ Expansion / Extension of Study
- ☐ IRB Certification
- ☐ Termination of Study
- ☐ Withdrawal of Application
- ☐ Unanticipated Adverse Effect
- ☐ Notification of Emergency Use
- ☐ Compassionate Use Request
- ☐ Treatment IDE
- ☐ Continued Access

- ☐ Change in:
  - ☐ Correspondent / Applicant
  - ☐ Design / Device
  - ☐ Informed Consent
  - ☐ Manufacturer
  - ☐ Manufacturing Process
  - ☐ Protocol - Feasibility
  - ☐ Protocol - Other
  - ☐ Sponsor

- ☐ Report submission:
  - ☐ Current Investigator
  - ☐ Annual Progress Report
  - ☐ Site Waiver Report
  - ☐ Final

- ☐ Response to FDA Letter Concerning:
  - ☐ Conditional Approval
  - ☐ Deemed Approved
  - ☐ Deficient Final Report
  - ☐ Deficient Progress Report
  - ☐ Deficient Investigator Report
  - ☐ Disapproval
  - ☐ Request Extension of Time to Respond to FDA
  - ☐ Request Meeting
  - ☐ Request Hearing

- ☐ Other Reason *(specify)*:

SECTION D3 — REASON FOR SUBMISSION - 510(k)

- ☒ New Device
- ☐ Additional or Expanded Indications
- ☐ Change in Technology

- ☐ Other Reason *(specify)*:

SECTION E — ADDITIONAL INFORMATION ON 510(K) SUBMISSIONS

Product codes of devices to which substantial equivalence is claimed

1	GCJ	2	HIF, GCJ	3		4	
5		6		7		8	

Summary of, or statement concerning, safety and effectiveness information

- [x] 510 (k) summary attached
- [ ] 510 (k) statement

Information on devices to which substantial equivalence is claimed *(if known)*

	510(k) Number		*Trade or Proprietary or Model Name*		*Manufacturer*
1	K071571	1	SurgiQuest AirSeal Optical Trocar & Cannula System	1	SurgiQuest Inc.
2	K083211	2	AirSeal Optical Trocar & Cannula System	2	SurgiQuest, Inc.
3	K092504	3	SurgiQuest AirSeal Optical Trocar & Cannula System	3	SurgiQuest, Inc.
4	K063367	4	45L High Core Insufflator F114	4	W.O.M. World of Medicine AG
5		5		5	
6		6		6	

SECTION F — PRODUCT INFORMATION - APPLICATION TO ALL APPLICATIONS

Common or usual name or classification name

issue site marking system / marker, radiographic, implantable

	Trade or Proprietary or Model Name for This Device		Model Number
1	SugiQuest AirSeal® Optical Trocar & Cannula System with integrated Insufflator DPIS 2000	1	
2		2	
3		3	
4		4	
5		5	

FDA document numbers of all prior related submissions *(regardless of outcome)*

1	2	3	4	5	6
7	8	9	10	11	12

Data Included in Submission

- [x] Laboratory Testing
- [ ] Animal Trials
- [ ] Human Trials

SECTION G — PRODUCT CLASSIFICATION - APPLICATION TO ALL APPLICATIONS

Product Code	C.F.R. Section *(if applicable)*	Device Class
HIF and GCJ	21 C.F.R. 884.1730 and 21 C.F.R. 876.1500	[ ] Class I [x] Class II [ ] Class III [ ] Unclassified

Classification Panel

Gastroenterology & Urology

Indications *(from labeling)*

The SurgiQuest AirSeal ® Optical Trocar & Cannula System with integrated Insufflator DPIS 2000 (the "DPIS 2000 System") is intended for use in diagnostic and/or therapeutic endoscopic procedures to distend a cavity by filling it with gas, to establish and maintain a path of entry for endoscopic instruments and to evacuate surgical smoke. It is indicated to facilitate the use of various laparoscopic instruments by filling the peritoneal cavity with gas to distend it, by creating and maintaining an air sealed obstruction-free instrument path and by evacuating surgical smoke. The trocar of the DPIS 2000 System is indicated for use with or without visualization.

Note: Submission of this information does not affect the need to submit a 2891 or 2891a Device Establishment Registration form.	FDA Document Number *(if known)*

SECTION H — MANUFACTURING / PACKAGING / STERILIZATION SITES RELATING TO A SUBMISSION

☒ Original ☐ Add ☐ Delete	Facility Establishment Identifier (FEI) Number	☒ Manufacturer ☐ Contract Manufacturer	☐ Contract Sterilizer ☐ Repackager / Relabeler	
Company / Institution Name SurgiQuest, Inc.		Establishment Registration Number 3006217371		
Division Name *(if applicable)* n/a		Phone Number *(including area code)* (203) 799-2400 Ext. 202		
Street Address 12 Cascade Blvd.-Suite 2B		FAX Number *(including area code)* (203) 799-2401		
City Orange		State / Province CT	ZIP Code	Country USA
Contact Name Daniel Donovan	Contact Title Sr. Dir., Operations		Contact E-mail Address DDonovan@surgiquest.com	

☒ Original ☐ Add ☐ Delete	Facility Establishment Identifier (FEI) Number	☒ Manufacturer ☐ Contract Manufacturer	☐ Contract Sterilizer ☐ Repackager / Relabeler

(b)(4)

[redacted]

☐ Original ☐ Add ☐ Delete	Facility Establishment Identifier (FEI) Number	☐ Manufacturer ☐ Contract Manufacturer	☐ Contract Sterilizer ☐ Repackager / Relabeler	
Company / Institution Name		Establishment Registration Number		
Division Name *(if applicable)*		Phone Number *(including area code)*		
Street Address		FAX Number *(including area code)*		
City		State / Province	ZIP Code	Country
Contact Name	Contact Title		Contact E-mail Address	

SECTION I UTILIZATION OF STANDARDS

Note: Complete this section if your application or submission cites standards or includes a *"Declaration of Conformity to a Recognized Standard"* statement.

	Standards No.	Standards Organization	Standards Title	Version	Date
1	IEC 60601-1	International Electrotechnical Commission	Medical Electrical Equipment - Part 1: General Requirements for Safety	1988; Amendment 1, 1991-11, Amendment 2, 1995.	10/31/2005
2	IEC60601-1-2	International Electrotechnical Commission	Medical Electrical Equipment - Part 1-2: General Requirements for Safety - Collateral Standard: Electromagnetic Compatibility - Requirements and Tests	Second Edition 2001	09/09/2008
3	ISO 14971	International Organisation for Standardization	Medical Devices - Application of risk management to medical devices	2007	09/12/2007
4	ISO 11137-1	International Organisation for Standardization	Sterilization of health care products - Radiation - Part 1: Requirements for development, validation, and routine control of a sterilization process for medical devices	2006/(R) 2010	10/04/2010
5	ISO 11137-2	International Organisation for Standardization	Sterilization of health care products - Radiation - Part 2: Establishing the sterilization dose	2006	09/08/2009
6	ISO 11137-3	International Organisation for Standardization	Sterilization of health care products - Radiation - Part 3: Guidance on dosimetric aspects	2006/(R)2010	10/04/2010
7	AAMI-TIR27	Association for the Advancement of Medical Instrumentation	Sterilization of Healthcare Products: Radiation Sterilization - Substantiantion of 25kGY as a Sterilization Dose - Method VD Max		

Please include any additional standards to be cited on a separate page.

Public reporting burden for this collection of information is estimated to average 0.5 hour per response, including the time for reviewing instructions, searching existing data sources, gathering and maintaining the data needed, and completing reviewing the collection of information. Send comments regarding this burden estimate or any other aspect of this collection of information, including suggestions for reducing this burden to:

Department of Health and Human Services
Food and Drug Administration
Office of the Chief Information Officer (HFA-710)
5600 Fishers Lane
Rockville, Maryland 20857

An agency may not conduct or sponsor, and a person is not required to respond to, a collection of information unless it displays a currently valid OMB control number.

CDRH PREMARKET REVIEW SUBMISSION COVER SHEET (Continued)

	Standards No.	Standards Organization	Standards Title	Version	Date
8.	ISO 11135-1	International Organisation for Standardization	Sterilization of health care products –Ethylene Oxide – Part 1: Requirements for the development, validation, and routine control of a sterilization process for medical devices	2007	05/05/2010
	Standards No.	**Standards Organization**	**Standards Title**	**Version**	**Date**
9.	ISO 10993-7	International Organisation for Standardization	Biological Evaluation of Medical Devices - Part 7: Ethylene Oxide Sterilization Residuals	2008	09/08/2009
	Standards No.	**Standards Organization**	**Standards Title**	**Version**	**Date**
10.	AAMI TIR 28	Association for the Advancement of Medical Instrumentation	Product adoption and process equivalency for ethylene oxide sterilization	2001	
	Standards No.	**Standards Organization**	**Standards Title**	**Version**	**Date**
11.	ISO 11607-1	International Organisation for Standardization	Packaging for terminally sterilized medical devices - Part 1: Requirements for materials, sterile barrier systems and packaging systems	2009	09/09/2008
	Standards No.	**Standards Organization**	**Standards Title**	**Version**	**Date**
12.	ASTM-F1980-02	ASTM International	Standard for Accelerated Aging of Sterile Medical Devices		
	Standards No.	**Standards Organization**	**Standards Title**	**Version**	**Date**

13.	ISO 10993-5	International Organisation for Standardization	Biological evaluation of medical devices -- Part 5: Tests for In Vitro Cytotoxicity	2009	05/05/2010
	Standards No.	**Standards Organization**	**Standards Title**	**Version**	**Date**
14.	ISO 10993-10	International Organisation for Standardization	Biological evaluation of medical devices - Part 10: Tests for irritation and delayed-type hypersensitivity	2002/Amd. 1:2006(E)	05/05/2010
	Standards No.	**Standards Organization**	**Standards Title**	**Version**	**Date**
15.	ISO 10993-12	International Organisation for Standardization	Biological evaluation of medical devices -- Part 12: Sample preparation and reference materials	2007	10/04/2010
	Standards No.	**Standards Organization**	**Standards Title**	**Version**	**Date**
16.	EN 980	European Standards Organizations	Graphical Symbols for use in the labeling of medical devices	2003	
	Standards No.	**Standards Organization**	**Standards Title**	**Version**	**Date**
17.	ISO 7000	**International Standard Organization**	Graphic Symbols for use on equipment	2004	
	Standards No.	**Standards Organization**	**Standards Title**	**Version**	**Date**
18.	EN 60417	European Standards Organizations	Graphical Symbols for use in the labeling of medical devices		

3. 510(k) Cover Letter

Please refer to the attached 510(k) Cover Letter.

SURGIQUEST

U.S. Food and Drug Administration
Center for Devices and Radiological Health
Document Mail Center – WO66-G609
10903 New Hampshire Avenue
Silver Spring, MD 20993-0002

CONFIDENTIAL **Date: December 10, 2010**

Reference: 510(k) Notification (Traditional)
SurgiQuest AirSeal® Optical Trocar & Cannula System with integrated Insufflator DPIS 2000

To Whom It May Concern,

Please find enclosed one original and one electronic copy of a traditional section 510(k) premarket notification for the SurgiQuest AirSeal® Optical Trocar & Cannula System with integrated Insufflator DPIS 2000 (the "DPIS 2000 System"). The DPIS 2000 System is intended for use in diagnostic and/or therapeutic endoscopic procedures to distend a cavity by filling it with gas, to establish and maintain a path of entry for endoscopic instruments and to evacuate surgical smoke. It is indicated to facilitate the use of various laparoscopic instruments by filling the peritoneal cavity with gas to distend it, by creating and maintaining a gas sealed obstruction-free instrument path and by evacuating surgical smoke. The trocar of the DPIS 2000 is indicated for use with or without visualization.

The DPIS 2000 System is classified under 21 C.F.R. 884.1730 and 21 C.F.R. 876.1500 as a class II device. The product code for endoscopes and accessories is GCJ and the product code for laparoscopic insufflators is HIF. The review panel for the DPIS 2000 System is General & Plastic Surgery.

12 Cascade Boulevard, Suite 2B | Orange, CT 06477 | 203.799.2400 T | 203.799.2401 F

The DPIS 2000 System is a combination of two previously cleared products. Specifically, the DPIS 2000 System incorporates into a single system the gas seal technology of the SurgiQuest AirSeal Optical Trocar & Cannula System, manufactured by SurgiQuest, Inc., that has been cleared by FDA on July 30, 2007 (k071571), on December 15, 2008 (k083211) and on November 11, 2009 (k092504) (the "AirSeal Predicate Devices"), and the insufflation technology of the 45 L High Flow Insufflator F114, manufactured by W.O.M. World of Medicine AG, that has been cleared by FDA on May 23, 2006 (k063367) (the "Insufflator Predicate Device" and, together with the AirSeal Predicate Devices, the "Predicate Devices").

The DPIS 2000 System consists of the following major components: (1) the trocar, (2) the cannula, (3) the filtered tube sets, and (4) a micro-processor controlled insufflation, recirculation and filtration unit (the "DPIS 2000 Unit"). The cannula, trocar and filtered tube sets are sterile, single-use products. The DPIS 2000 Unit is active, non-sterile and reusable. The DPIS 2000 Unit is a microprocessor controlled device that is designed to function in one of three (3) separate modes of operation: (a) Insufflation Mode; (b) AirSeal Mode; or (c) Smoke Evacuation Mode.

In the Insufflation Mode, the DPIS 2000 System functions exclusively as a traditional laparoscopic insufflator and is used with standard veress needles and/or cannulae and the Insufflation Tube Set.

In the AirSeal Mode, the DPIS 2000 System functions as a traditional laparoscopic insufflator in the initial insufflation phase and subsequently used with the AirSeal Tube Set, Trocar and Cannula to create a "pressure barrier" or state of equilibrium within the bore of the cannula tube. This pressure barrier, which is created within the cannula using an uninterrupted flow of gas, allows the free passage of various tools (graspers, clip appliers, etc.) into and out of the abdominal cavity while at the same time maintaining insufflation pressures (i.e. pneumoperitoneum) within the abdomen.. [Note: the means of creating and maintaining this barrier has been described previously in the 510(k)'s sighted above]

In the Smoke Evacuation Mode, the DPIS 2000 System functions as a traditional laparoscopic insufflator and is also used with the Smoke Evacuation Tube Set and two traditional laparoscopic trocars to perform a smoke evacuation function.

In accordance with the guidance "Format for Traditional and Abbreviated 510(k)'s", issued on August 12, 2005, please find below a table describing the design and use of the DPIS System:

Question	Yes	No
Is the device intended for prescription use (21 CFR 801 Subpart D)?	**X**	
Is the device intended for over-the-counter use (21 CFR 807 Subpart C)?		**X**
Does the device contain components derived from a tissue or other biologic source?		**X**
Is the device provided sterile? Yes, cannula, trocars and tube sets.	**X**	
Is the device intended for single use? Yes, cannula, trocars and tube sets.	**X**	
Is the device a reprocessed single use device?		**X**
If yes, does this device type require reprocessed validation data?		**X**
Does the device contain a drug?		**X**
Does the device contain a biologic?		**X**
Does the device use software? Yes, insufflation, recirculation and filtration unit.	**X**	
Does the device include clinical information?		**X**
Is the device implanted?		**X**

As explained in more detail in the attached 510(k) notice, the DPIS 2000 System is a coincident placement of two previously cleared technologies into the same enclosure subsystem and therefore substantially equivalent to the AirSeal Predicate Device and to the Insufflator Predicate Device. Specifically, the proposed device has the same intended use and the same indication for use as the Predicate Devices. In addition, the DPIS 2000 System and the Predicate Devices use the same

or similar basic operating principles and incorporate the same or similar basic design features. Additionally, the Optical Trocar, the Blunt Tip Trocar including fixation device and the Cannula of the proposed device are identical in technology, design and material to the trocars, fixation device and cannula of the AirSeal Predicate Device. Furthermore, the AirSeal filtered Tube Set modules are substantially equivalent to the tube sets used with the AirSeal Predicate Device. Efficiency testing and design improvements have allowed for (b)(4) [redacted] which is designed to prevent backflow of fluids into the DPIS200 unit. The Smoke Evacuation Tube Set is similar in technology, design and material to the tube set cleared with the AirSeal Predicate Devices. The Smoke Evacuation Tube Set is designed to deliver CO_2 for the creation and maintenance of pneumoperitoneum and to evacuate and filter surgical smoke.

The fundamental technology of the DPIS 2000 System used to (a)create and maintain pneumoperitoneum, (b)create and maintain a seal in the Cannula and (3) to evacuate smoke, is substantially equivalent to the fundamental technology used by the Predicate Device. The principle distinction between the subject device and the Predicate Device is the amalgamation of the two technologies into one unified system, the improvement to the combined device with regard to safety and alarm features and improvements in terms of user interface and design for human factors.

In accordance with the Medical Device User Fee and Modernization Act of 2002, SurgiQuest, Inc. has submitted the application fee of $2,174 required of a certified small business. A copy of the User Fee Cover Sheet is provided within the premarket notification.

The Establishment Registration number for SurgiQuest, Inc. is 3006217371. Small Business Decision Number is SBD118252.

Information regarding this device, its testing, composition, features, manufacture, etc. has been kept confidential by SurgiQuest, Inc. Such information has been made available only to SurgiQuest's employees and consultants. We request that such information remain confidential throughout the 510(k) review

process. Furthermore, portions of the material in this application may be trade secret or confidential commercial or financial information within the meaning of 21 C.F.R. § 20.61 and therefore not subject to disclosure under the Freedom of Information Act, even after the existence of the application becomes public. Additionally, any claim of substantial equivalence is made exclusively in the context of the Food, Drug and Cosmetic Act and should not be interpreted in any other regard. In accordance with http://www.fda.gov/MedicalDevices/DeviceRegulationandGuidance/HowtoMarketYourDevice/PremarketSubmissions/ucm134508.html, an electronic copy is being provided with this submission and it is an exact duplicate of the original paper submission.

We trust that the information provided in the attached 510(k) notice is sufficient for FDA to find the DPIS 2000 System substantially equivalent to its Predicate Devices.

Any questions or correspondence regarding this submission should be directed to:

Daniel Donovan
Sr. Dir., Operations, SurgiQuest, Inc.
12 Cascade Blvd. – Suite 2B
Orange, CT 06477
Phone: (203) 799-2400 Ext. 202
Fax: (203) 799-2401
E-mail: ddonovan@surgiquest.com.

We thank the Agency for its review of this submission.

Sincerely,

Kourosh Azarbarzin

Founder & C.E.O., SurgiQuest, Inc.

4. Indications for Use Statement

Please refer to the attached Indications for Use Statement.

INDICATIONS FOR USE STATMENT

510(k) Number (if known): _____

Device Name: SurgiQuest AirSeal® Optical Trocar & Cannula System with integrated Insufflator DPIS 2000

Indications for Use:

The SurgiQuest AirSeal ® Optical Trocar & Cannula System with integrated Insufflator DPIS 2000 (the "DPIS 2000 System") is intended for use in diagnostic and/or therapeutic endoscopic procedures to distend a cavity by filling it with gas, to establish and maintain a path of entry for endoscopic instruments and to evacuate surgical smoke. It is indicated to facilitate the use of various laparoscopic instruments by filling the peritoneal cavity with gas to distend it, by creating and maintaining a gas sealed obstruction-free instrument path and by evacuating surgical smoke. The trocar of the DPIS 2000 System is indicated for use with or without visualization.

Prescription Use ___X____ (Part 21 CFR 801 Subpart D)	AND/OR	Over-The-Counter Use _____ (21 CFR 801 Subpart C)

(PLEASE DO NOT WRITE BELOW THIS LINE-CONTINUE ON ANOTHER PAGE IF NEEDED)

Concurrence of CDRH, Office of Device Evaluation (ODE)

5. 510(k) Summary

As requested in 21 C.F.R. 807.87(h) please find attached a 510(k) Summary in accordance with 21 C.F. R. 807.92.

510(k) SUMMARY OF SAFETY & EFFECTIVENESS

Submitter:	SurgiQuest, Inc. 12 Cascade Blvd. – Suite 2B Orange, CT 06477
Contact Person:	Daniel Donovan Sr. Dir., Operations Phone: (203) 799-2400 Ext. 202 Fax: (203) 799-2401 e-mail: ddonovan@surgiquest.com
Date Prepared:	December 10, 2010
Trade Name:	SurgiQuest AirSeal® Optical Trocar & Cannula System with integrated Insufflator DPIS 2000 (Trade name subject to change)
Common Name:	Disposable Endoscopic Trocar and Cannula; Carbon Dioxide Insufflator for Laparascopy
Classification Name:	Endoscope and accessories under 21 C.F.R. 876.1500; Laparoscopic Insufflator under 21 C.F.R. 884.1730
Regulatory Class:	II
Product Code:	GCJ and HIF
Predicate Devices:	SurgiQuest AirSeal Optical Trocar & Cannula System, SurgiQuest, Inc., k071571 AirSeal Optical Trocar & Cannula System, SurgiQuest, Inc., k083211 SurgiQuest AirSeal Optical Trocar & Cannula System SurgiQuest, Inc., k092504 45L High Core Insufflator F114 W.O.M. World of Medicine AG, k063367

Device Description: The SurgiQuest AirSeal® Optical Trocar & Cannula System with integrated Insufflator DPIS 2000 (the "DPIS 2000 System") consists of the following major components: (1) a trocar, (2) a cannula, (3) tube sets, and (4) a micro-processor controlled insufflation, recirculation and filtration unit (the "DPIS 2000 Unit"). The cannula, trocar and tube sets are sterile, single-use products. The DPIS 2000 Unit is non-sterile and reusable.

The DPIS 2000 Unit is designed to function in one of three (3) separate modes of operation: (a) Insufflation Mode; (b) AirSeal Mode; or (c) Smoke Evacuation Mode.

Intended Use: The DPIS 2000 System is intended for use in diagnostic and/or therapeutic endoscopic procedures to distend a cavity by filling it with gas, to establish and maintain a path of entry for endoscopic instruments and to evacuate surgical smoke. It is indicated to facilitate the use of various laparoscopic instruments by filling the peritoneal cavity with gas to distend it, by creating and maintaining a gas sealed obstruction-free instrument path and by evacuating surgical smoke. The trocar of the DPIS 2000 System is indicated for use with or without visualization.

Substantial Equivalence: The DPIS 2000 System is substantially equivalent to the AirSeal Predicate Device (k071571, k083211, k092504) and to the Insufflation Predicate Device (k063367). Specifically, the proposed device has the same intended use and the same indication for use as the Predicate Devices. In addition, the DPIS 2000 System and the Predicate Devices use the same or similar basic operating principles and incorporate the same or similar basic design features. Finally, biocompatibility, sterility, packaging and bench testing demonstrate the safety and effectiveness of the proposed device.

Bench test results demonstrate that the DPIS 2000 System is safe and effective in creating and maintaining pneumoperitoneum in all three modes.

The DPIS 2000 Unit has been developed in accordance with 21 CFR 820, ISO 13485:2003 & ISO 14971:2007

and will be tested in accordance with IEC 60601-1, General Requirements for Medical Electrical Equipment - Part 1: General Requirements for Safety and IEC60601-1-2, Medical Electrical Equipment - Part 1-2: General Requirements for Safety - Collateral Standard: Electromagnetic Compatibility - Requirements and Tests.

Gamma sterility validation has been performed (and will be in the case of the Smoke Evacuation Tube Set) in accordance with ISO 11137 Sterilization of health care products – Radiation, Part 1 – Part 3 and AAMI TIR 27, Sterilization of Healthcare Products: Radiation Sterilization - Substantiation of 25kGY as a Sterilization Dose - Method VD Max. ETO sterility validation has been performed ISO 11135-1, Sterilization of health care products –Ethylene Oxide – Part 1: Requirements for the development, validation, and routine control of a sterilization process for medical devices; and ISO 10993-7, Biological Evaluation of Medical Devices – Part 7: Ethylene Oxide sterilization residuals. Residual ethylene oxide (EO) and ethylene chlorohydrin (ECH) data shows that the limit of EO < 5 mg / 10 days and ECH < 5 mg / 10 days that remain on the tube set will not be exceeded.

A sterility assurance level (SAL) is $\leq 10^{-6}$ achieved. The foregoing sterility validation testing will be performed on the Smoke Evacuation Tube Set.

Package and product integrity were tested in accordance with ISO11607-1, Packaging for Terminally Sterilized Medical Devices and ASTM-F-1980-02, Standard for Accelerated Aging of Sterile Medical Device Packages. ISO 11137 -2, Sterilization of health care products -- Radiation -- Part 2: Establishing the sterilization dose.

Finally, biocompatibility testing has been performed on the cannula, the optical trocar, the blunt tipped trocar including fixation device and the AirSeal® Tube Set (and will be in the case of the Smoke Evacuation Tube Set) in accordance with ISO 10993-5, Biological Evaluation of Medical Devices – Part 5: Tests for InVitro Cytotoxicity; ISO 10993-10, Biological Evaluation of Medical Devices – Part 10: Tests for Irritation and Delayed Type

Hypersensitivity,; and ISO 10993-5:2009, Biological Evaluation of Medical Devices – Part 12: Sample Preparation and Reference Material.]

6. Truthful and Accurate Statement

In accordance with 21 C.F.R. 807.87(k) please find attached a Truthful and Accurate Statement.

PREMARKET NOTIFICATION

TRUTHFUL AND ACCURATE STATEMENT

[As required by 21 CFR 807.87(k)]

I certify that, in my capacity as Founder and C.E.O. of SurgiQuest, Inc., I believe to the best of my knowledge, that all data and information submitted in the premarket notification are truthful and accurate and that no material fact has been omitted.

(Signature)

Kourosh Azarbarzin
(Typed Name)

12-12-2010
(Date)

7. Class III Summary and Certification

This section does not apply.

8. Financial Certification or Disclosure Statement

This section does not apply.

9. Declaration of Conformity and Summary Reports

This section does not apply.

10. Executive Summary

Please refer to the attached Executive Summary including:

- a description of the proposed device, including the indications for use and technology;
- a device comparison table and a substantial equivalence discussion; and
- a summary of the performance testing included in this submission.

10. Executive Summary

Please find below a description of the SurgiQuest AirSeal® Optical Trocar & Cannula System with integrated Insufflator DPIS 2000 (the "DPIS 2000 System"). The device description consists of a statement of the proposed device's intended use and indication for use and a description of the technological characteristics of the DPIS 2000 System. In addition, set forth below is a comparison table comparing the DPIS 2000 System with its predicate devices and a substantial equivalence discussion.

A. Device Description

1. Intended Use / Indication for Use

The DPIS 2000 System is intended for use in diagnostic and/or therapeutic endoscopic procedures to distend a cavity by filling it with gas, to establish and maintain a path of entry for endoscopic instruments and to evacuate surgical smoke. It is indicated to facilitate the use of various laparoscopic instruments by filling the peritoneal cavity with gas to distend it, by creating and maintaining a gas sealed obstruction-free instrument path and by evacuating surgical smoke. The trocar of the DPIS 2000 System is indicated for use with or without visualization.

2. Technological Characteristics

The DPIS 2000 System is a combination of two previously cleared products. Specifically, the DPIS 2000 System incorporates into a single system the gas seal technology of the SurgiQuest AirSeal Optical Trocar & Cannula System, manufactured by SurgiQuest, Inc., that has been cleared by FDA on July 30, 2007 (k071571), on December 15, 2008 (k083211) and on November 11, 2009 (k092504)

(collectively, the "AirSeal Predicate Devices") and the insufflation technology of the 45 L High Flow Insufflator F114, manufactured by W.O.M. World of Medicine AG, that has been cleared by FDA on May 23, 2006 (k063367) (the "Insufflator Predicate Device" and, together with the AirSeal Predicate Devices, the "Predicate Devices").

The DPIS 2000 System is a microprocessor controlled device that is designed to function in one of three (3) separate modes of operation: (a) Insufflation Mode; (b) AirSeal Mode; or (c) Smoke Evacuation Mode. In the Insufflation Mode, the DPIS 2000 System functions exclusively as a traditional laparoscopic insufflator and is used with standard veress needles and/or cannulae and the Insufflation Tube Set. In the AirSeal Mode, the DPIS 2000 System functions as a traditional laparoscopic insufflator in the initial insufflation phase and subsequently used with the AirSeal Tube Set, Trocar and Cannula to create a "pressure barrier" or state of equilibrium within the bore of the cannula tube. This pressure barrier, which is created within the cannula using an uninterrupted flow of gas, allows the free passage of various tools (scopes, graspers, clip appliers, etc.) into and out of the abdominal cavity while at the same time maintaining insufflation pressure (i.e. pneumoperitoneum) within the abdomen. In the Smoke Evacuation Mode, the DPIS 2000 System functions as a traditional laparoscopic insufflator and is also used with the Smoke Evacuation Filtered Tube Set and two traditional laparoscopic trocars to filter and evacuate surgical smoke from the abdomen.

The DPIS 2000 System consists of the following major components: (1) a trocar, (2) a cannula, (3) tube sets, and (4) a micro-processor controlled insufflation, recirculation and filtration unit (the "DPIS 2000 Unit"). The cannula, trocar and tube sets are sterile, single-use products. The DPIS 2000 Unit is non-sterile and reusable.

As with the predicate AirSeal device, the DPIS 2000 System will be available with an optical trocar (the "Optical Trocar") and a "blunt tipped" trocar (the "Blunt Tip Trocar"), each for use in the AirSeal Mode only. After insertion of the Optical Trocar or Blunt Tip Trocar (collectively, the "Trocars") into the Cannula (defined below), the device is inserted into the abdomen. The Blunt Tip Trocar can be used

with or without an accessory device to secure the Cannula or entry port in place once entry has been achieved.

The Cannula serves as a port of entry for instruments during laparoscopic surgery. A manifold located on the proximal portion of the Cannula is used for attaching the AirSeal Tube Set (described below) for insufflation, creation of the gas seal and smoke evacuation. The manifold incorporates three fluid pathway channels which correspond to the three lumens of the AirSeal Tube Set described below, e.g., insufflation supply (which is guided directly into the abdomen for insufflation and pressure measurement), and a supply lumen and a return lumen for establishment and maintenance of the "pressure barrier. The SurgiQuest AirSeal incorporates a gas seal technology. As a result, the AirSeal®does not depend upon rubber mechanical seals employed in existing trocars & cannulae to maintain abdominal pressure. The seal is created by achieving a state of equilibrium within the bore of the cannula tube. The same CO_2 that is used to insufflate the patient is channeled through small orifices in the proximal portion of the cannula. The CO_2, being directed longitudinally into the cannula bore, collides and mixes with the mass of CO_2 gas attempting to escape from the abdomen as a result of peritoneal pressure behind it. At this point, the downward flows creates a pressure barrier against the CO_2 attempting to escape from the abdomen. This gas is returned to the DPIS 2000 Unit and is filtered before reentering the internal AirSeal circulation line of the DPIS 2000 Unit. The filtered gas is then circulated to the Cannula. This circulation of gas to and from the Cannula, which is accomplished within the DPIS 2000 Unit, results in the "pressure barrier" described above. As a result of the "pressure barrier", there is minimal loss of CO_2 during the insertion and removal of medical instruments through the cannula. A constant low flow of CO_2 ([redacted] is delivered to the abdomen through the insufflation lumen to assure a stable pneumoperitoneum during the operation of the DPIS 2000 System in the AirSeal Mode.

The DPIS 2000 System will be available with the following single use, sterile tube sets: (i) SurgiQuest AirSeal® Tube Set (the "AirSeal Tube Set") with attached

SurgiQuest Veress Needle Adapter Tube Set (the "Veress Needle Tube Set"); (ii) SugiQuest Smoke Evacuation Tube Set (the "Smoke Evacuation Tube Set"); and (iii) SurgiQuest Standard Insufflation Tube Set (the "Insufflation Tube Set").

The AirSeal Tube Set with attached Veress Needle Tube Set is used in the AirSeal Mode only and is a single length of tri-lumen tubing that is used to connect the Cannula to the DPIS 2000 Unit, and incorporates a housing that contains three filters that are used to filter gas being delivered to and from the DPIS 2000 Unit. The AirSeal Tube Set incorporates three lumen: (a) a first filtered lumen (the "Supply Lumen") for supplying CO_2 to the Cannula for the purpose of creating the "pressure barrier"; (b) a second filtered lumen (the "Return Lumen") for returning CO_2 to the DPIS 2000 Unit for the purpose of creating the "pressure barrier"; and (c) a third filtered lumen (the "Insufflation Lumen") for introducing CO_2 into the abdomen and for sensing and regulating abdominal pressure. The Veress Needle Tube Set is a single lumen tube that is connected to the distal end of the AirSeal Tube Set. The Veress Needle Tube Set is to be connected to a veress needle or a traditional trocar when a veress needle or traditional trocar is used to achieve pneumoperitoneum. This filtered tube set is used with the existing cleared AirSeal device and has a history of safe use.

The Smoke Evacuation Tube Set is used only in the Smoke Evacuation Mode and consists of paratube and is used to connect two standard commercially available cannulae to the DPIS 2000 Unit. The Smoke Evacuation Tube Set incorporates a housing that contains two filters that are used to filter gas being delivered to and from the DPIS 2000 Unit. The Smoke Evacuation Tube Set is a paratube consisting of: (a) a clear filtered lumen to be connected to the first cannula for supplying CO_2 to the abdomen; and (b) a blue filtered lumen to be attached to a second cannula for returning CO_2 from the abdomen to the DPIS 2000 Unit and for sensing CO_2 pressure. This method of recirculation and filtration of surgical smoke is well known and has a history of safe use in the state of the art.

The Insufflation Tube Set is used only in the Insufflation Mode and is a single lumen tube that is used to connect the DPIS 2000 Unit to a veress needle or a standard trocar when a veress needle or standard trocar is used to achieve and maintain pneumoperitoneum. The Insufflation Tube Set incorporates a filter that is used to filter gas being delivered from the DPIS 2000 Unit to the abdomen. Insufflation tubing has a long history of safe use in the state of the art.

The DPIS 2000 Unit is a microprocessor controlled device that consists of the following major components: (b)(4) [redacted] (b)(4) [redacted]

The DPIS 2000 Unit offers three insufflation flow levels. Using the user menu, the user may set the maximum flow rate in each of these three levels. Maximum flow setting is 40 l/min. The set flow level and the actual flow value are shown on the touch screen display during the surgical procedure. The flow measurement of the DPIS 2000 Unit is performed by a "differential pressure measurement", which calculates the flow by measuring the pressure in front of and behind a known resistance.

The DPIS 2000 Unit allows pressure settings in the range of 1 mmHg to 20 mmHg and is designed with a safety threshold at 15 mmHg that requires positive action on the part of the user if a pressure setting above 15 mmHg is desired. Both the set pressure value and the actual pressure value are shown on the touch screen display during the surgical procedure. (b)(4) [redacted] In addition, and in accordance with "Hysteroscopic And Laparoscopic Insufflators: Submission Guidance For A 510(K)", the DPIS 2000 Unit is designed with an automatic venting system that is activated to reduce the actual pressure if an overpressure is detected. If the venting valve is unable to reduce

the overpressure to the set pressure level, a visual and continuous acoustic warning is activated. Finally, the DPIS 2000 Unit is designed with the following safety threshold: if the intra-abdominal pressure reaches or exceeds the safety threshold of 30 mmHg, the warning "Overpressure" is shown on the touch screen display and a continuous audible alarm is activated and insufflation is stopped.

The DPIS 2000 Unit is designed with (b)(4) [redacted] (b)(4) [redacted] In addition, the DPIS 2000 Unit is designed with a gas sensor within the internal circulation line. The gas sensor monitors the concentration of CO_2 in the gas that is returned from the Cannula to the DPIS 2000 Unit while working in the AirSeal Mode. If the CO_2 level drops (b)(4) [redacted] then a visual and acoustic warning is activated and the set abdominal pressure of the DPIS 2000 Unit is automatically reduced to 12 mmHg and the flow of CO_2 delivered to the abdomen through the insufflation lumen is increased. (b)(4) [redacted]. If the leak is not resolved within this time, the insufflation stops.

The DPIS 2000 Unit is also designed with a (b)(4) [redacted] sensor, located in the filter socket of the DPIS 2000 Unit, for the AirSeal Tube Set and Smoke Evacuation Tube Set (also referred to as the filter receptacle). In the event of unintended or accidental ingress of fluid into the filter housing, the unit is equipped with a (b)(4) [redacted] sensor which monitors the fluid level in the filter housing while working in the AirSeal Mode or the Smoke Evacuation Mode. If ingress of fluid into the filter housing is detected, visual and acoustic warnings are activated. Thereafter, the user is advised to change the tube set and, if the tube set is not replaced, the respective mode shuts down.

When working in the Smoke Evacuation Mode, the user can select between a low flow evacuation level (b)(4) [redacted] and a high flow evacuation level (b)(4) [redacted]

3. Device Comparison Table

Please find below a comparison table comparing the DPIS 2000 System to the AirSeal Predicate Devices and to the Insufflation Predicate Device.

DPIS 2000 Control Unit

SE Characteristics	SurgiQuest AirSeal® Optical Trocar & Cannula System with Integrated Insufflator (DPIS 2000)	SurgiQuest AirSeal® (k071571, k083211, k092504)	Comments
Intended Use	Same or SE	Same or SE	The intended use for these devices is abdominal and thoracic access in order to perform minimally invasive surgery.
Indications for Use	Same or SE	Same or SE	It is indicated to facilitate the use of various laparoscopic instruments by filling the peritoneal cavity with gas to distend it, by creating and maintaining a gas sealed obstruction-free instrument path and by evacuating surgical smoke.
Target Population	Same or SE	Same or SE	Candidates for minimally invasive surgical procedures in the abdominal and thoracic regions.
Anatomical Sites	Same or SE	Same or SE	The intended use for these devices is abdominal and thoracic access.
Where Used (Hospital, clinic, etc)	Same or SE	Same or SE	All the devices are intended for use in Hospitals and Surgical Centers.
Energy Used and/or Delivered	Same or SE	Same or SE	The DPIS2000 is an active capital medical device. The DPIS2000 system will be tested in accordance with IEC 60601-1, Safety & 60601-1-2, Electromechanical Compatibility.
Human Factors	Same or SE	Same or SE	Design for Human factors are mandated in the design of medical devices including access ports.
Design	Same or SE	Same or SE	The DPIS2000 System access ports are comprised of the same modules, i.e. an insufflator & recirculation pump, a cannula, an obturator and an endoscope, if the device is to be used under visualization.

SE Characteristics	SurgiQuest AirSeal® Optical Trocar & Cannula System with Integrated Insufflator (DPIS 2000)	SurgiQuest AirSeal® (k071571, k083211, k092504)	Comments
Standards Met	Same or SE	Same or SE	The SurgiQuest device is designed in accordance with CFR Part 820 and ISO 13485: 2003. The product information and labeling associated with the predicate devices indicates the same is true for them. A complete list of Standards is included in this filing.
Materials	Same or SE	Same or SE	The SurgiQuest DPIS2000 device is manufactured in accordance with the Standards in an ISO 13485 certified facility. These materials have a demonstrable history of safe use in the field. The DPIS2000 system will be tested in accordance with IEC 60601-1, Safety & 60601-1-2, Electromechanical Compatibility.
Biocompatibility	Same or SE	Same or SE	The materials used in the manufacture of the device are well characterized in state of the art. The disposable patient contact devices are tested in accordance with ISO 10993 and included in a separate table.
Compatibility with the Environment	Same or SE	Same or SE	Risk Analysis is performed in accordance with ISO14971:2000. There is no risk connected with environmental conditions, physical features, reciprocal interference or maintenance. The devices are non-active, single use and disposable.
Compatibility with Other Devices	Same or SE	Same or SE	The DPIS2000 system will be tested in accordance with IEC 60601-1, Safety & 60601-2, Electromechanical Compatibility. The inner diameter of the device dictates the range of instrumentation sizes that can be introduced through the port. Software validation is performed in accordance with the Standards.
Electrical Safety	Same or SE	Same or SE	The DPIS2000 system will be tested in accordance with IEC 60601-1, Safety & 60601-1-2, Electromechanical Compatibility.

SE Characteristics	SurgiQuest AirSeal® Optical Trocar & Cannula System with Integrated Insufflator (DPIS 2000)	SurgiQuest AirSeal® (k071571, k083211, k092504)	Comments
Mechanical Safety	Same or SE	Same or SE	These devices are substantially similar in method of deployment and operation.
Chemical Safety	Same or SE	Same or SE	There are no chemicals or medicinal products introduced with the use of this device.
Thermal Safety	Same or SE	Same or SE	The DPIS2000 system will be tested in accordance with IEC 60601-1, Safety & 60601-1-2, Electromechanical Compatibility.
Radiation safety	Same or SE	Same or SE	There is no risk of intended or unintended radiation emission with the devices.

DPIS 200 Disposable Modules (Trocar, Cannula & Tube Sets)

SE Characteristics	SurgiQuest AirSeal®	SurgiQuest AirSeal® (k071571, k083211, k092504)	Comments
Intended Use	Same or SE	Same or SE	The intended use for these devices is abdominal and thoracic access in order to perform minimally invasive surgery
Indications for Use	Same or SE	Same or SE	These devices have applications in abdominal and thoracic minimally invasive surgical procedures to establish a port of entry for endoscopic instruments
Target Population	Same or SE	Same or SE	Candidates for minimally invasive surgical procedures in the abdominal and thoracic regions
Anatomical Sites	Same or SE	Same or SE	The intended use for these devices is abdominal and thoracic access
Where Used (Hospital, clinic, etc)	Same or SE	Same or SE	All the devices are intended for use in Hospitals and Surgical Centers
Energy Used and/or Delivered	Same or SE	Same or SE	There is no energy source associated with the use of these devices (i.e., radiofrequency (RF), sonic vibration, CO2 laser). There is no electrical risk or risk associated with noise or vibration.
Human Factors	Same or SE	Same or SE	Design for Human factors are mandated in the design of medical devices including access ports.
Design	Same or SE	Same or SE	The access ports are comprised of the same modules, i.e. a cannula, an obturator and an endoscope, if the device is to be used under visualization. The devices are designed in accordance with CFR Part 820 & ISO 13485:2003
Standards Met	Same or SE	Same or SE	The SurgiQuest device is designed in accordance with ISO 13485:2003. The product information and labeling associated with the predicate devices indicates the same is true for them. A complete listing of Standards met is included in this filing.

SE Characteristics	SurgiQuest AirSeal®	SurgiQuest AirSeal® (k071571, k083211, k092504)	Comments
Materials	Same or SE	Same or SE	The SurgiQuest device is manufactured from medical grade materials well characterized in the state of the art. These materials have a demonstrable history of safe use in the field. The predicate devices appear to be fabricated from medical grade materials as well.
Biocompatibility	Same or SE	Same or SE	The materials used in the manufacture of the devices are well characterized in state of the art medical devices. The devices have been tested in accordance with ISO 10993
Compatibility with the Environment	Same or SE	Same or SE	Risk Analysis is performed in accordance with ISO14971:2000. There is no risk connected with environmental conditions, physical features, reciprocal interference or maintenance. The devices are non-active, single use and disposable.
Compatibility with Other Devices	Same or SE	Same or SE	The DPIS 2000 system will be tested in accordance with IEC 60601-1, Safety & 60601-2, Electromechanical Compatibility. The disposable modules can only be used with the DPIS 2000 Unit. The inner diameter of the disposable device dictates the range of instrumentation sizes that can be introduced through the port.
Sterility	Same or SE	Same or SE	Access ports are sterilized by one of two methods: Ethylene Oxide gas in accordance with ISO11135:1994 or ISO 11137:2006 (AAMI TIR27:2001 VDMax Gamma Method). These devices will be sterilized using Gamma radiation.
Electrical Safety	Same or SE	Same or SE	All materials used in the fabrication of the devices are non-conductive
Mechanical Safety	Same or SE	Same or SE	These devices are substantially similar in method of deployment and operation
Chemical Safety	Same or SE	Same or SE	There are no chemicals or medicinal products introduced with the use of this device

SE Characteristics	SurgiQuest AirSeal®	SurgiQuest AirSeal® (k071571, k083211, k092504)	Comments
Thermal Safety	Same or SE	Same or SE	There is no introduction of an energy source to the devices. The devices are hand held, single use disposables.
Radiation safety	Same or SE	Same or SE	There is no risk of intended or unintended radiation emission with the devices

4. Substantial Equivalence Discussion

The DPIS 2000 System is substantially equivalent to the AirSeal Predicate Devices (k071571, k083211, k092504) and to the Insufflation Predicate Device (K063367). Specifically, the proposed device has the same intended use and indication for use as the Predicate Devices. Furthermore, the DPIS 2000 System and the Predicate Devices employ similar basic operating principles and incorporate similar basic design. In some respects, the design of subsystems is identical. Specifically, the Optical Trocar, the Blunt Tip Trocar including fixation device and the Cannula of the proposed device are identical in technology, functional design and material to the trocars, fixation device and cannula of the AirSeal Predicate Device. The AirSeal Tube Set module is identical to the tube set used with the AirSeal Predicate Devices in functional design. Testing and data collected on the predicate performance has resulted in (b)(4) [redacted]. The Smoke Evacuation Tube Set is similar in technology, design and material to the tube set used with the AirSeal Predicate Devices and the differences between the two devices are predominately in that the Smoke Evacuation Filtered Tube Set is used for insufflation and to filter and evacuate smoke. This tube set module is not employed in the AirSeal function and therefore does not require the same mass of filtration media.

The fundamental fluid dynamic engineering technology of the DPIS 2000 System used to create and maintain the AirSeal pressure barrier and to perform the smoke evacuation function is identical to the technology used in the Predicate Devices. Moreover, many of the differences between the proposed device and the Predicate Devices are related to the implementation of additional and enhanced safety features (b)(4) [redacted] are checked during the initial self check;

implementation of (b)(4) [redacted] maximum pressure setting is limited to 20 mmHg; constant monitoring of CO_2 in the circulated gas while performing in the AirSeal Mode; fluid level monitoring in the AirSeal Mode and Smoke Evacuation Mode) or user convenience (e.g. LED touch screen; integration of the insufflation technology, gas seal technology and smoke evacuation technology into a single device as opposed to the use of AirSeal with an external standard insufflator; incorporation of three separate modes (Standard Insufflation Mode, Smoke Evacuation Mode and AirSeal Mode) in one system and availability of additional instrument sizes). Dissimilarity between the predicate and the subject device are improvements such as software controls and improved user interface and ergonomics.

Based on the same intended use and indication for use and the similiarities in technolgy, design and materials, the DPIS 2000 System is substantially equivalent to its predicate devices. The differences between the proposed device and the predicate devices do not raise new questions of safety and effectiveness. In addition, biocompatibility, sterility, packaging and bench testing demonstrate the safety and effectiveness of the DPIS 2000 System.

5. Summary of Bench Testing

Bench Testing has been performed with the DPIS 2000 System in all three different modes to challenge the ability of the system to safely and effectively create and maintain pneumoperitoneum. The main test components consisted of a prototype of the DPIS 2000 Unit, a standard insufflation tube, an AirSeal Tube Set, a Smoke Evacuation Tube Set, several different laparoscopic instruments and a dummy (i.e., surgical manikin) with a volume of approximately 2200 ml when insufflated to 15 mmHg to simulate the volume-pressure behavior within an adult abdominal cavity. Three system test cycles were performed. (b)(4) [redacted]

(b)(4) [redacted]. The main test objectives were to demonstrate that:

- in the Standard Insufflation Mode, set pressures of (b)(4) [redacted] (b)(4) [redacted] will be reached and maintained without experiencing significant overpressure situations (e.g. in accordance with "Hysteroscopic And Laparoscopic Insufflators: Submission Guidance For A 510(k)" the actual pressure does not exceed the set pressure by more than 5 mmHg (b)(4) [redacted] or significant pressure loss that may result in the cavity collapsing.
- in the Smoke Evacuation Mode: (i) a set pressure of (b)(4) [redacted] will be reached and maintained without experiencing significant overpressure situations (e.g. in accordance with "Hysteroscopic And Laparoscopic Insufflators: Submission Guidance For A 510(k)"actual pressure does not exceed the set pressure by more than 5 mmHg (b)(4) [redacted] (b)(4) [redacted] or significant pressure loss that may result in the cavity collapsing; and (ii) the smoke evacuation function does not have a negative influence on maintaining the set peritoneal pressure.
- in the AirSeal Mode: (i) set pressures of (b)(4) [redacted] will be reached and maintained without experiencing significant overpressure situations in accordance with "Hysteroscopic And Laparoscopic Insufflators: Submission Guidance For A 510(k)" (e.g. actual pressure does not exceed the set pressure by more than 5 mmHg (b)(4) [redacted] (b)(4) (b) [redacted] or significant pressure loss; and (ii) any possible pressure loss caused by the insertion and removal of different laparoscopic instruments or any artificially caused overpressure situation can be compensated by the DPIS 2000 Unit.

The bench test results demonstrate that the DPIS 2000 System is safe and effective with regards to creating and maintaining pneumoperitoneum. In all three modes the set pressure was reached and maintained without the occurrence of clinically significant overpressure or pressure loss situations. Specifically, the test results demonstrate that the actual pressure did not exceed the set pressure by more than 5 mmHg (b)(4) [redacted] The test results also confirm that while operating in the Smoke Evacuation Mode, the suction caused by the smoke evacuation function was efficiently compensated and did not have a significant influence on the maintenance of the set pressure. In addition, the test results demonstrate that while working in the AirSeal Mode the insertion and removal of instruments leads to only minimal pressure loss that was efficiently compensated by the DPIS 2000 Unit. Finally, the test results demonstrate that when overpressure conditions were deliberately caused for testing purposes, they were efficiently compensated for while the system was operating in the AirSeal Mode.

11. Device Description

Please find attached a description of the performance specifications and the design requirements of the proposed device. In addition, please refer to images and schematics of the DPIS 2000 System.

11. Device Description

The SurgiQuest AirSeal® Optical Trocar & Cannula System with integrated Insufflator DPIS 2000 (the "DPIS 2000 System") is intended for use in diagnostic and/or therapeutic endoscopic procedures to distend a cavity by filling it with gas, to establish and maintain a path of entry for endoscopic instruments and to evacuate surgical smoke. It is indicated to facilitate the use of various laparoscopic instruments by filling the peritoneal cavity with gas to distend it, by creating and maintaining a gas sealed, obstruction-free instrument path and by evacuating surgical smoke. The trocar of the DPIS 2000 System is indicated for use with or without visualization.

The DPIS 2000 System is a combination of two previously cleared products. Specifically, the DPIS 2000 System incorporates into a single system the gas seal technology of the SurgiQuest AirSeal Optical Trocar & Cannula System, manufactured by SurgiQuest, Inc., that has been cleared by FDA on July 30, 2007 (k071571), on December 15, 2008 (k083211) and on November 11, 2009 (k092504), (the "AirSeal Predicate Devices") and the insufflation technology of the 45 L High Flow Insufflator F114, manufactured by W.O.M. World of Medicine AG, that has been cleared by FDA on May 23, 2006 (k063367), (the "Insufflator Predicate Devices"). The DPIS 2000 System consists of the following major components: (1) a trocar, (2) a cannula, (3) tube sets, and (4) an insufflation, recirculation and filtration unit (the "DPIS 2000 Unit"). With the exception of the minor modifications described below, the trocars, cannulae and tube sets are identical to the components of the AirSeal Predicate Devices. Other than minor changes to the (b)(4) [redacted] (b)(4) the DPIS 2000 Unit has the same fundamental technological characteristics as the AirSeal Predicate Device. Finally, but for the minor

modifications described below, the insufflation technology of the DPIS 2000 System is identical to the insufflation technology of the Insufflator Predicate Device.

1. Trocars

As with the currently cleared AirSeal technology, the DPIS 2000 System will be available with an optical trocar (SurgiQuest AirSeal® Optical Trocar) and a "blunt tipped" trocar (SurgiQuest AirSeal® Blunt Tip Trocar). The trocars are single use devices that will be supplied sterile.

(a) SurgiQuest AirSeal® Optical Trocar

Except for a (b)(4) [redacted] (b)(4) and the availability of additional sizes (see dimensions below), the SurgiQuest AirSeal® Optical Trocar (the "Optical Trocar") is identical to the optical trocar available for use with the AirSeal Predicate Devices and is used to create the entry through the abdominal wall. The Optical Trocar will be available in three diameters (5mm, 12mm (b)(4) [redacted] and in three lengths (100mm, 120mm & 150mm). It is composed of a medical grade plastic handle, stainless steel shaft and clear medical grade plastic tip. The handle is used for gripping during insertion and withdrawal through the abdominal wall. The tip of the Optical Trocar has an elliptical chisel shape to aid in penetration through tissue (see illustration below). The tip of the Optical Trocar is transparent to allow for visualization. The proximal portion of the Optical Trocar handle includes a port for the insertion of an endoscope. The longitudinal portion of the handle and the inner diameter of the Optical Trocar are hollow in order to facilitate axial transmission of the endoscope for use during penetration through the abdominal wall. (b)(4) [redacted]

Optical Trocar with Cannula

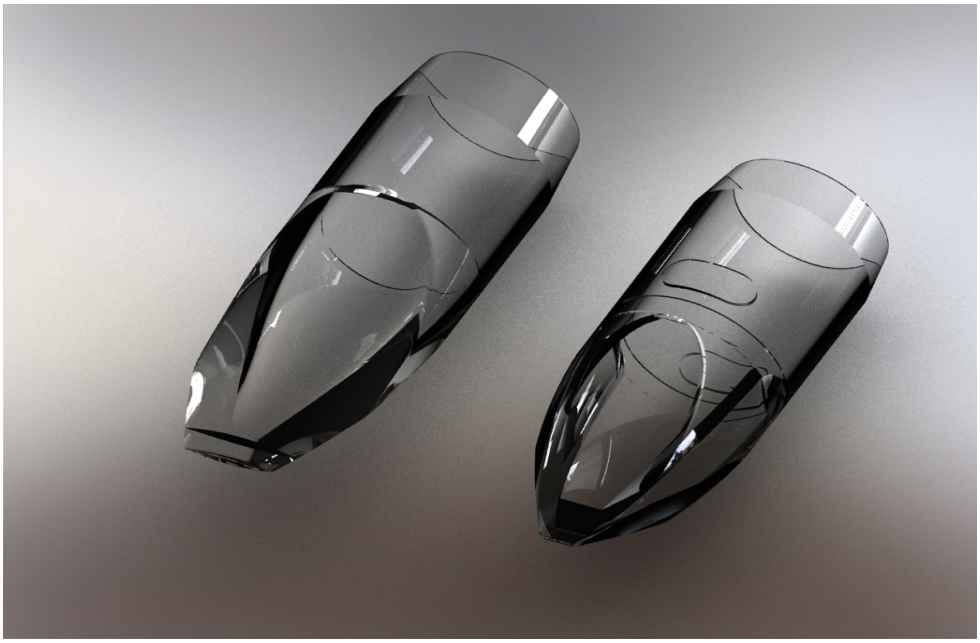

Tip of Optical Trocar

(b) SurgiQuest AirSeal® Blunt Tip Trocar

The SurgiQuest AirSeal® Blunt Tip Trocar (the "Blunt Tip Trocar") is identical to the "blunt tipped" trocar available for use with the AirSeal Predicate Device k092504, and consists of a solid shaft made of medical grade plastic and a rounded distal tip. The Blunt Tip Trocar will be available in three diameters (5mm, 12mm (b)(4) [redacted] and 100 mm in length. The Blunt Tip Trocar is designed to be inserted into the abdomen after the surgeon has created an incision in the skin. The Blunt Tip Trocar follows the incision or "cut-down" through the abdominal layers until it is introduced into the peritoneum. This method is well characterized in the field of laparoscopic surgery and is commonly referred to as the "blunt entry" or "Hassan-style" entry and does not require visualization through a scope. The Blunt Tip Trocar can be used with or without an accessory device to secure the cannula or entry port in place once entry has been achieved. The fixation device, which is identical to the fixation device available for use with the AirSeal Predicate Device [k092504], is a threaded, cone shaped module made of medical grade plastic through which sutures may be secured in order to stabilize the port during the surgical procedure. The accessory also facilitates ease of axial movement and positional adjustment of the cannula during the surgical procedure. Entry with the use of a fixation device is well characterized in the clinical literature and has been widely employed in state-of-the-art laparoscopic surgery.

Blunt Tip Trocar with Fixation Device

Fixation Device

2. SurgiQuest AirSeal® Cannula

The SurgiQuest AirSeal® Cannula (the "Cannula") is a single use, sterile device that is identical to the cannula available for use with the AirSeal Predicate Devices except for the availability of additional sizes (see dimensions below). The Cannula is composed of medical grade (b)(4) [redacted] plastic and is non-electroconductive. The Cannula will be available in three diameters (5mm, 12mm (b) [redacted] (b)(4) [redacted] and in three lengths (100mm, 120mm & 150mm). It serves as a port of entry for instruments during laparoscopic surgery. In order to deploy the Cannula, the surgeon makes a small incision in the abdominal wall. After insertion of the Optical Trocar or Blunt Tip Trocar (the "Trocars") into the Cannula, the device is inserted into the abdomen. The Trocar is then removed and the Cannula remains deployed as a port of entry for introduction of various minimally invasive surgical devices. A port on the top portion of the Cannula is used for attaching the AirSeal Tube Set (described below) for insufflation, creation of the seal and smoke evacuation. The manifold incorporates three discrete fluid pathways which correspond to the three lumens of the AirSeal Tube Set described below, e.g., insufflation supply (which is guided directly into the abdomen for insufflation and pressure measurement), and a supply lumen and return lumen for establishment of the "CO_2 barrier". Please refer to the description of the AirSeal Tube Set and the description of the AirSeal Mode below.

As with the AirSeal Predicate Devices, the DPIS 2000 System incorporates a gas seal technology. As a result, the proposed device does not depend upon rubber mechanical seals employed in existing trocars and cannulae to maintain abdominal pressure. Instead, as with the AirSeal Predicate Devices, the seal is created by achieving a state of equilibrium within the bore of the Cannula. The same CO_2 that is used to insufflate the patient is channeled through small orifices in the proximal portion of the Cannula. The CO_2, being directed longitudinally into the Cannula bore collides and mixes with the mass of CO_2 gas attempting to escape from the abdomen

as a result of peritoneal pressure behind it. At this point, the upward and downward flows create a "CO_2 barrier" or zone of pressure equilibrium. Here, CO_2 is being recirculated and operative peritoneal pressure is being maintained at the level set by the DPIS 2000 Unit. This method of creating and maintaining the "CO_2 barrier" is identical to the method employed by the AirSeal Predicate Devices.

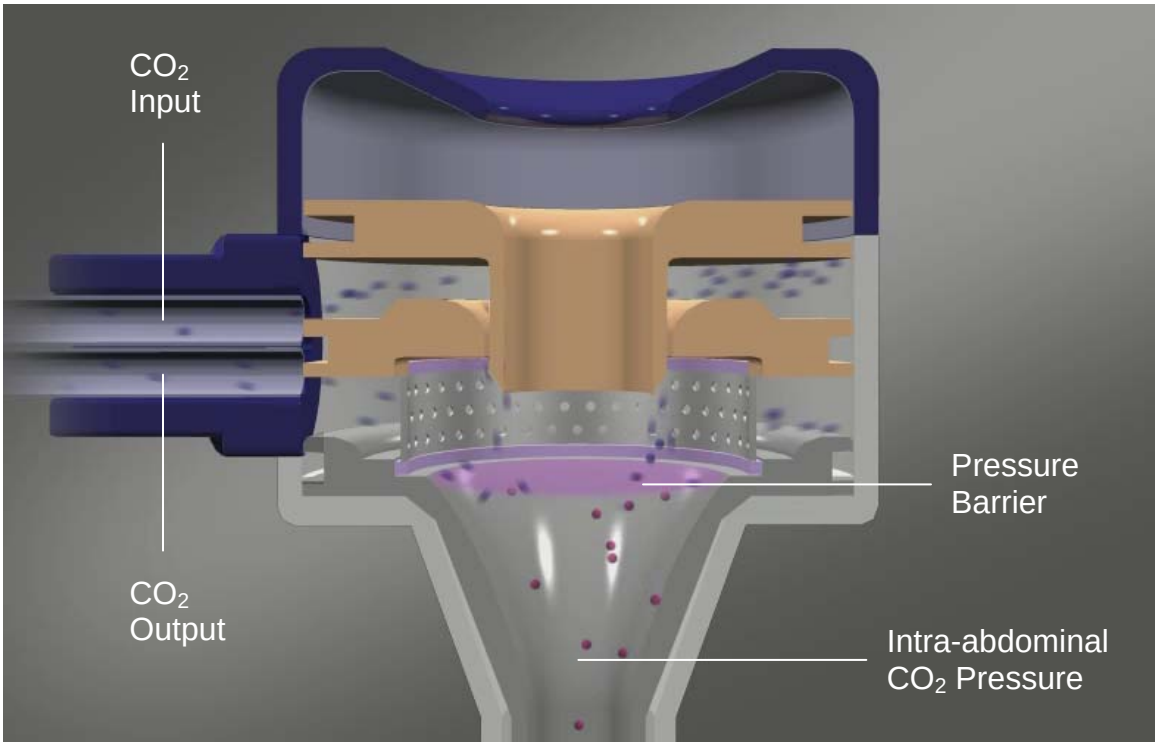

3. Tube Sets

The DPIS 2000 System will be available with the following single use, sterile tube sets:

- SurgiQuest AirSeal® Tube Set (the "AirSeal Tube Set") with attached SurgiQuest Veress Needle Adapter Tube Set (the "Veress Needle Tube Set")
- SurgiQuest Smoke Evacuation Tube Set (the "Smoke Evacuation Tube Set")
- SurgiQuest Standard Insufflation Tube Set (the "Insufflation Tube Set")

(a) AirSeal Tube Set with attached Veress Needle Tube Set

With the exception of (b)(4) [redacted] (b)(4) the AirSeal Tube Set with attached Veress Needle Tube Set is identical to the tube sets for use with the AirSeal Predicate Devices. The AirSeal Tube is a single length of tri-lumen tubing that is used to connect the Cannula to the DPIS 2000 Unit, and incorporates a housing that contains three filtration pathways that are used to filter CO_2 being delivered to and from the DPIS 2000 Unit.

In addition, the housing is designed (b)(4) [redacted] to monitor the fluid level in the event of unintended ingress of condensation of bodily fluids (one for low fluid level and one for high fluid level). The filter housing is made of medical grade (b)(4) [redacted] plastic and the AirSeal Tube and attached Veress Needle Tube set is made of medical grade PVC. The AirSeal Tube Set with attached Veress Needle Tube

Set is supplied sterile. The AirSeal Tube Set is approximately (b)(4) and incorporates three lumens:

- a first filtered lumen (the "Supply Lumen") for supplying CO_2 to the Cannula for the purpose of creating the "CO_2 barrier";
- a second filtered lumen (the "Return Lumen") for returning CO_2 to the pump for the purpose of completing the fluid circuit that creates the "CO_2 barrier"; and
- a third filtered lumen (the "Insufflation Lumen") for introducing CO_2 into the abdomen and for sensing and regulating abdominal pressure.

All three lumens contain an in-line (b)(4) filter that is identical to the filter used in the tube sets available for use with the AirSeal Predicate Device except for (b)(4). The AirSeal Tube Set is designed to deliver and remove CO_2 from the abdomen and is filtered to $\leq 0.2\mu$ in accordance with FDA guidance (b)(4) The Return Lumen and Insufflation Lumen each have an inner diameter of (b)(4). and an outer diameter of (b)(4) The Supply Lumen has an inner diameter of (b)(4) and an outer diameter of (b)(4) (b)(4) (b)(4) The gas delivered by the Supply Lumen and the Insufflation Lumen is filtered before reaching the AirSeal Cannula inlet ports. Both the distal and proximal ends of the tube set are designed with fitment manifolds for secure attachment to the DPIS 2000 Unit and Cannula respectively.

The Veress Needle Tube Set is a single lumen tube that is connected to the distal end of the AirSeal Tube Set. The Veress Needle Tube Set is to be connected to a veress needle or a traditional trocar when a veress needle or traditional trocar are used to create pneumoperitoneum. The Veress Needle tube set is identical to the predicate device.

AirSeal Tube Set with Veress Needle Tube Set

(b) Smoke Evacuation Tube Set

The Smoke Evacuation Tube Set consists of a paratube which is used to connect two standard commercially available cannulae to the DPIS 2000 Unit and incorporates a filter housing that contains filtration media that is used to filter gas being delivered to and from the DPIS 2000 Unit. Like the housing of the AirSeal Tube Set, the housing of the Smoke Evacuation Tube Set is designed (b)(4) [redacted] (b)(4) [redacted] The filter housing is made of medical grade (b)(4) [redacted] plastic and the Smoke Evacuation Tube Set is made of medical grade PVC. The Smoke Evacuation Tube Set is approximately (b)(4) [redacted] The tube set consists of two lumens:

- a clear filtered lumen to be connected to the first cannula for supplying CO_2 to the abdomen and sensing peritoneal CO_2 pressure; and
- a blue filtered lumen to be attached to a second cannula for returning CO_2 from the abdomen to the DPIS 2000 Unit.

The Smoke Evacuation Tube Set is designed to deliver and remove CO_2 from the abdomen and is filtered to ≤0.2μ in accordance with FDA guidance (b)(4) [redacted] (b)(4) [redacted] Each of the two lumens is (b)(4) [redacted] in diameter and allows for adequate supply and return to the DPIS 2000 Unit in order to remove and filter smoke from the abdomen.

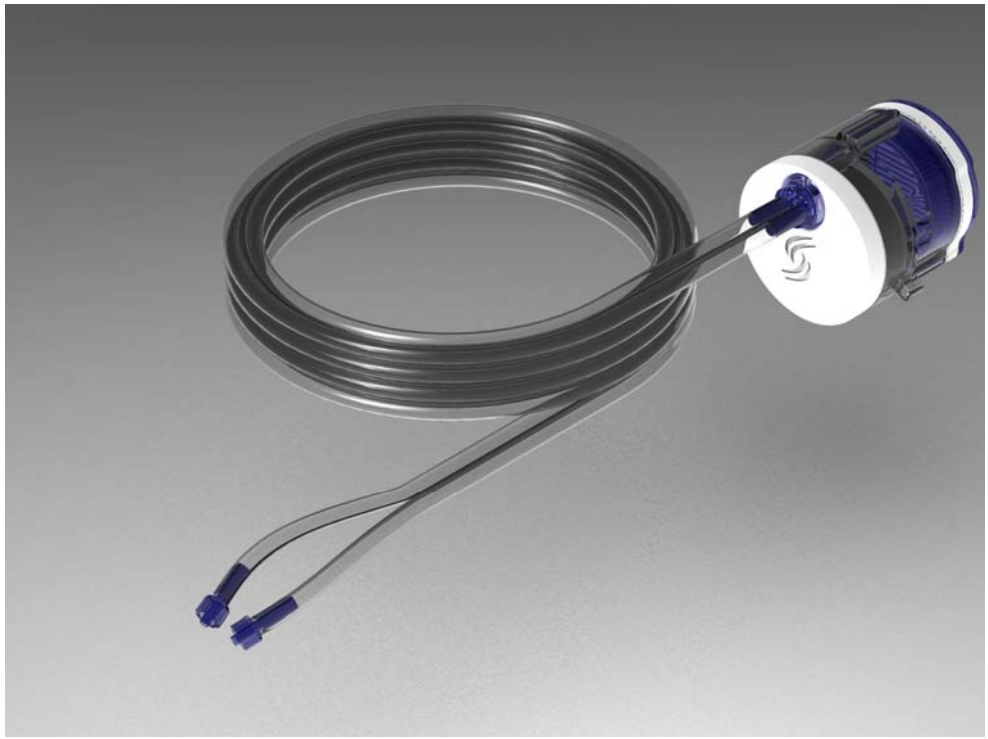

Smoke Evacuation Tube Set

(c) Insufflation Tube Set

The Insufflation Tube Set is a single lumen tube and is used to connect the DPIS 2000 Unit to a veress needle or a standard trocar when a veress needle or standard trocar are used to achieve and maintain pneumoperitoneum. The Insufflation Tube Set incorporates a filter that is used to filter gas being delivered from the DPIS 2000 Unit to the abdomen. The Insufflation Tube Set is made of medical grade PVC. The Insufflation Tube Set is approximately (b)(4) [redacted]. The insufflation tube set is identical to the predicate.

Insufflation Tube Set

4. DPIS 2000 Unit

The DPIS 2000 Unit is a microprocessor controlled device that is designed to function in one of three (3) separate modes of operation: (a) Insufflation Mode; (b) Smoke Evacuation Mode; or (c) AirSeal® Mode (the "AirSeal Mode"). The DPIS 2000 Unit consists of the following major components: (b)(4) [redacted]

(b)(4) [redacted]. Using the ON/OFF switch located on the front panel, the user turns the DPIS 2000 Unit on and off. When the unit is turned on, an internal device test is automatically performed. If an error is determined as a result of the internal device test, an acoustic alarm is activated and an error code is shown on the touch screen display. After the internal device test has been successfully performed, the user is guided by the touch screen display, which indicates all steps necessary to prepare the device for proper operation. By touching the START/STOP symbol on the front panel of unit, the insufflation process starts or stops.

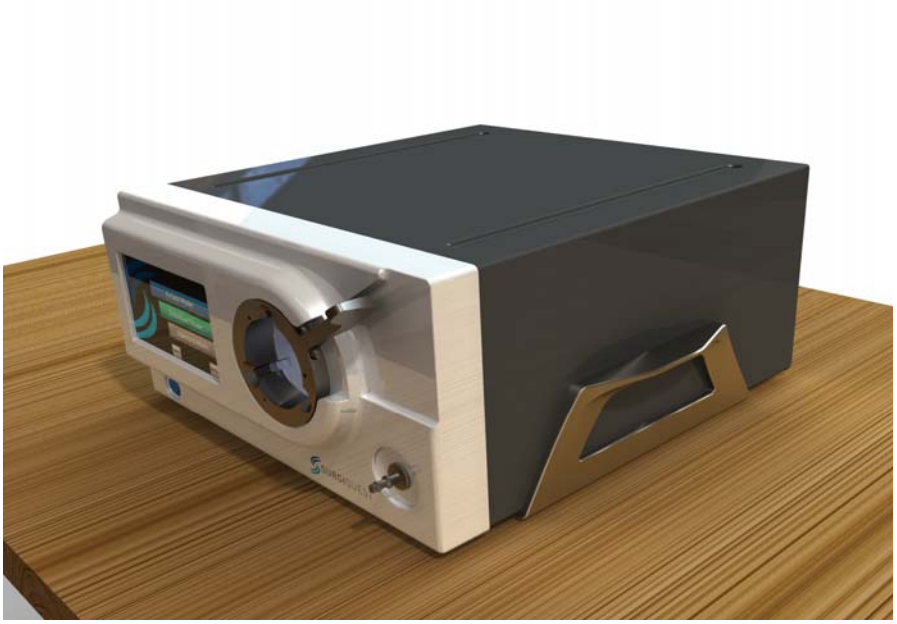

DPIS 2000 Unit

The above depicted touch screen display shows all displays and keys

(a) Modes

i. Insufflation Mode

The DPIS 2000 Unit functions exclusively as a traditional laparoscopic insufflator in this mode of operation and is used with standard veress needles and/or cannulae and the Insufflation Tube Set. The Insufflation Tube Set is connected to the DPIS 2000 Unit using a standard tube connector located on the lower right side of the DPIS 2000 Unit. The insufflation technological characteristics of the DPIS 2000 Unit, which are described below, are identical to technological characteristics of the Insufflator Predicate Device, (b)(4) [redacted]

The DPIS 2000 Unit incorporates two pressure reduction stages. (b)(4) [redacted]

(b)(4) [redacted] a proportional valve that governs pressure and flow. In addition, an electrical safety valve is located behind the proportional valve that automatically stops any further gas flow into the body cavity in case a malfunction of the proportional valve is detected.

The DPIS 2000 Unit offers three insufflations flow modes. Controlling the user menu, the user may set the maximum flow rate in each of these three levels as follows: (i) level 1, up to 20 l/min.; (ii) level 2, up to 40 l/min.; and (iii) level 3, up to 40 l/min. The factory settings for each of these levels is 5 l/min. (level 1), 20 l/min. (level 2); and 40 l/min. (level 3). After setting the standard flow rate for each level in the user menu, the user must set the desired flow rate for each procedure by pressing the corresponding flow level key (1 – 3) on the touch screen display. The user may further adjust the desired flow rate during a procedure by pressing the flow up or flow down arrows on the touch screen display. Insufflation level 1 is designed for use with a veress needle at the beginning of the procedure to establish pneumoperitoneum. Once the desired pressure has been achieved (described below), the DPIS 2000 Unit automatically switches into flow level 3. (b)(4) [redacted] The set flow level and the actual flow value are shown on the touch screen display during the operation.

The user can set the nominal pressure in the range of 1 mmHg to 20 mmHg by pressing the pressure arrow symbols located on the touch screen display. If a pressure setting of greater than 15 mmHg is desired, the pressure setting automatically stops at 15 mmHg and a warning "Safety Limit" appears on the display. The user my override this pressure warning by releasing the pressure up symbol, waiting two (2) seconds, and then pressing the pressure up symbol again. The set pressure value and the actual pressure value are shown on the touch screen display during the operation. The DPIS 2000 Unit permits the user to program a set pressure value within the range of 1 mmHg to 15 mmHg in the user menu, which will be

automatically selected each time the unit is turned on. (b)(4) [redacted]

(b)(4) [redacted]

The DPIS 2000 Unit is designed with a redundant pressure measurement feature to control the intra-abdominal pressure. In case of a malfunction of one sensor, a warning appears on the touch screen display, an audible warning is activated and the insufflation stops immediately. If the pressure sensors detect an actual pressure of 3 - 5 mmHg above the set pressure for a period of 3 - 5 seconds, the venting valve automatically opens to reduce the actual pressure. In the factory setting, the venting valve is activated. If the venting valve is unable to reduce the overpressure back to the set pressure within 5 seconds, the device stops the insufflation, the warning "Overpressure/Venting System Active" is shown on the touch screen display and a continuous audible alarm is activated. Furthermore, if the intra-abdominal pressure exceeds or has reached the safety threshold of 30 mmHg, the warning "Overpressure" is shown on the touch screen display and a continuous audible alarm is activated and the insufflation is stopped.

(b)(4)
[redacted]

ii. AirSeal Mode

In this mode of operation the DPIS 2000 Unit functions as a traditional laparoscopic insufflator during the initial insufflation phase to create pneumoperitoneum and subsequently to create the identical pressure barrier of the Air Seal Predicate Device. Specifically, in this functional mode, the DPIS 2000 Unit is used with the AirSeal Tube Set, Trocars and Cannula described above. By connecting the AirSeal Filtered Tube Set to the DPIS 2000 Unit and selecting AirSeal Mode on the touch screen display, the DPIS2000 recognizes that the system is to be used in the AirSeal Mode. If the AirSeal Mode is selected using the touch screen display (b)(4) [redacted] (b)(4) [redacted] In the AirSeal Mode, rather than delivering the CO_2 gas to the barbed gas port (i.e., "Christmas tree") connector, for the Insufflation Tube Set, the DPIS 2000 Unit directs the CO_2 gas to the insufflation lumen of the AirSeal Filtered Tube Set, which is engaged with the DPIS 2000 Unit at

the filter housing socket (also referred to as the filter receptacle). In this mode, the means of delivering CO_2 through the Cannula and into the abdomen during the initial insufflation phase to create pneumoperitoneum is identical to the means for supplying CO_2 to the abdomen in the Insufflation Mode (b)(4) [redacted] Note: Please refer to the description of the Insufflation Mode above. The CO_2 is delivered to the patient through a discrete filtered lumen in the AirSeal Tube Set, which is one of three filtered lumens of the AirSeal Tube Set. In addition to the insufflation line, a supply line and a return line are used to achieve and maintain a state of equilibrium within the Cannula bore. Specifically, the gas supplied to the Cannula is directed through a supply lumen in the AirSeal Tube Set and longitudinally into the Cannula bore. This gas flow collides with the mass of the CO_2 gas attempting to escape from the abdomen as a result of peritoneal pressure behind it. At this point, the downward flow creates a pressure barrier against the CO_2 attempting to escape from the abdomen. This gas is returned to the DPIS 2000 Unit over the return line (or lumen) of the AirSeal Tube Set, and is filtered before reentering the internal AirSeal circulation line of the DPIS 2000 Unit. The filtered gas is then circulated to the Cannula through the filtered supply lumen of the AirSeal Tube Set. This circulation of gas to and from the Cannula, which is accomplished by a compressor (also referred to as a pump) within the DPIS 2000 Unit, results in the "pressure barrier" described above. As a result of the "pressure barrier", there is minimal loss of CO_2 during the insertion and removal of medical instruments through the Trocar. A constant low flow of CO_2 (b)(4) [redacted] is delivered to the abdomen through the insufflation lumen to assure an optimal CO_2 level is maintained in the peritoneum during the operation of the AirSeal circuit. The operative peritoneal pressure is regulated over the pressure barrier within the Cannula and said pressure regulation (b) (b)(4) [redacted]. The supply is governed by a proportional valve regulating the amount of gas coming from the compressor and flowing to the Cannula over the supply line. (b)(4) [redacted]

(b)(4) [redacted] (b)(4) The strength of the CO_2 barrier is in balance with the abdominal CO_2 pressure thus maintaining a desired peritoneal pressure (b)(4) [redacted] The wider the proportional valve opens, the more air is circulated back to the pump; the tighter the proportional valve is closed, the more air is directed into the Cannula. (b)(4) [redacted]. By opening and closing the proportional valve, the CO_2 barrier can be set to retain pressure from up to 5 mmHg to 30 mmHg. The maximum setting with the DPIS 2000 Unit is 20 mmHg.

A gas sensor within the internal circulation line within the DPIS 2000 Unit monitors the level of CO_2 that is returned from the Cannula to the DPIS 2000 Unit. If the CO_2 level drops for more than 30 seconds then a visual and acoustic warning is activated and the set abdominal pressure of the DPIS 2000 Unit is automatically reduced to 12 mmHg and the flow of CO_2 delivered to the abdomen through the insufflation lumen is increased. (b)(4) [redacted] If the leak is not resolved within this time, the insufflation stops.

In the event of accidental or unintentional fluid ingress, the DPIS 2000 Unit is also designed with a (b)(4) [redacted] sensor, located in the filter socket of the DPIS 2000 Unit (also referred to as the filter receptacle) that monitors the fluid level in the filter housing of the AirSeal Tube Set. If the filter housing is filled with fluid up to either the low or high fluid level, visual and acoustic warnings are activated. Thereafter, the user is advised to change the tube set and the AirSeal Mode shuts down.

(b)(4)
[redacted]

iii. Smoke Evacuation Mode

In this mode of operation the DPIS 2000 Unit functions as a traditional laparoscopic insufflator and also performs a smoke evacuation function. In this mode, the DPIS 2000 Unit is used with the Smoke Evacuation Tube Set and two traditional laparoscopic trocars. By connecting the Smoke Evacuation Tube Set to the DPIS 2000 Unit and selecting Smoke Evacuation Mode on the touch screen display, the DPIS 2000 employs mode recognition to enable system function in the Smoke Evacuation Mode. If (b)(4) [redacted]

In the Smoke Evacuation Mode, rather than delivering the CO_2 gas to the stand-alone (i.e., Christmas tree) connector for the Insufflation Tube Set (which is the case in the Insufflation Mode), the DPIS 2000 Unit directs the CO_2 supply gas through the filter housing to the clear insufflation lumen of the Smoke Evacuation Tube Set. A second lumen (a blue lumen) is used to return the gas to the DPIS200 and thus complete the smoke evacuation circuit. The supply of CO_2 gas to the insufflation

cannula and into the abdomen is identical to the supply of gas to the abdomen in the Insufflation Mode (including flow and pressure settings, pressure measurements, alarms and other safety features, etc.). [Please refer to the description of the Insufflation Mode above.] In the Smoke Evacuation Mode, the DPIS 2000 Unit evacuates, filters and circulates any peritoneal smoke plume created as a result of the use of electrocautery devices during the surgical procedure. A pressure and gas sensor is incorporated within the return line (also referred to as the suction line) of the DPIS 2000 Unit, and measures the pressure within the return line and also detects the CO_2 within the return line. When a pressure of $\geq$ 5 mmHg and a commensurate volume of CO_2 is detected within the return line of the DPIS 2000 Unit, a compressor (also referred to as pump) is activated to initiate smoke evacuation. The compressor circulates the gas returning from the patient to the DPIS 2000 Unit within a designated line within the DPIS 2000 Unit (see below pneumatic schematic). The circulating gas within the internal circulation line creates an underpressure, which then actively suctions gas from the patient to the DPIS 2000 Unit, effectively removing any peritoneal smoke plume within the abdomen. The user can select between a low evacuation level (b)(4) [redacted] (b) and a high evacuation level (b)(4) [redacted] when working in the Smoke Evacuation Mode.

(b)(4)

[redacted]

12. Substantial Equivalence Discussion

Please find below a detailed comparison between the proposed device and the predicate devices sufficient to demonstrate substantial equivalence of the devices in terms of:

- indications for use;
- technology; and/or
- performance specifications, including any testing.

In addition, please find the 510(k) summaries and statement of the predicate devices.

12. Substantial Equivalence Discussion

The SurgiQuest AirSeal® Optical Trocar & Cannula System with integrated Insufflator DPIS 2000 (the "DPIS 2000 System") is substantially equivalent to the SurgiQuest AirSeal Optical Trocar & Cannula System, manufactured by SurgiQuest, Inc., that has been cleared by FDA on July 30, 2007 (k071571), on December 15, 2008 (k083211) and on November 11, 2009 (k092504) (the "AirSeal Predicate Devices"), and to the 45 L High Flow Insufflator F114, manufactured by W.O.M. World of Medicine AG, that has been cleared by FDA on May 23, 2006 (k063367) (the "Insufflator Predicate Device" and together with the AirSeal Predicate Devices, the "Predicate Devices"). The DPIS 2000 System is merely a combination of the AirSeal Predicate Devices and the Insufflator Predicate Device.

1. Similarities and Differences in Intended Use and Indication for Use between the DPIS 2000 System and Predicate Devices

The proposed device and the AirSeal Predicate Devices are all intended for use in diagnostic and/or therapeutic endoscopic procedures to establish and maintain a path of entry for endoscopic instruments. Both the proposed device and the AirSeal Predicate Devices are indicated to facilitate the use of various laparoscopic instruments by creating and maintaining a gas sealed obstruction-free instrument path. In addition, like the AirSeal Predicate Device (k092504), the proposed device is intended for use in diagnostic and/or therapeutic endoscopic procedures to evacuate surgical smoke. Finally, like the Insufflation Predicate Device, the DPIS 2000 System is intended for use in diagnostic and/or therapeutic endoscopic procedures to distend a cavity by filling it with gas and is indicated to facilitate the use of various laparoscopic instruments by filling the peritoneal cavity with gas to distend it.

Dissimilarity between the predicate and the subject device are improvements such as software controls and improved user interface and ergonomics.

2. Similarities and Differences in Technology and Design between the DPIS 2000 System and the AirSeal Predicate Devices

The DPIS 2000 System is substantially equivalent in fundamental technology, functional design and material to its predicate devices. Both the proposed device and the AirSeal Predicate Devices consist of the following major components: a trocar, a cannula, tube sets, and a recirculation and filtration unit.

With the exception of minor design modifications and additions, the AirSeal® Optical Trocar (the "Optical Trocar"), the AirSeal® Blunt Tip Trocar (the "Blunt Tip Trocar") including fixation device and the AirSeal® Cannula (the "Cannula") that are available for use with the proposed device are substantially equivalent in technology, design and material to the trocars, fixation device and cannula of the AirSeal Predicate Devices

In addition, the AirSeal® filtered Tube Set with attached Veress Needle Tube Set (the "AirSeal Tube Set") that is supplied for use with DPIS 2000 System to enable the use of the proposed device in the AirSeal Mode is identical to the tube sets used with the AirSeal Predicate Devices except for (b)(4) [redacted] (b)(4) [redacted] The AirSeal® Smoke Evacuation Tube Set (the "Smoke Evacuation Tube Set"), which is specifically designed for use of the DPIS 2000 System in the Smoke Evacuation Mode, is similar in technology, design and material to the tube set used with the AirSeal Predicate Devices. The differences between the Smoke Evacuation Tube Set and the tube set of the AirSeal Predicate Devices are predominantly the result of the fact that the Smoke Evacuation Tube Set is not used to create and maintain pneumoperitoneum and include:

- The Smoke Evacuation Tube Set incorporates a paratube whereas the tube Set of the AirSeal Predicate Device is designed with a three lumen tubing;
- (b)(4) [redacted]
- The fluid path of the filter housing that is used by the tube set of the AirSeal Predicate Device as a "supply line" for creating the gas seal is occluded in the Smoke Evacuation Tube Set;
- Each lumen is assembled with a luer lock connector to facilitate the attachment of standard commercially available cannulae. The tri-lumen tube set for the subject device and the AirSeal Predicate Device is equipped with a proprietary connector;
- Like the filter housing of the AirSeal Tube Set of the proposed device, the filter housing of the Smoke Evacuation Tube Set is designed with (b)(4) [redacted]

Furthermore, the above described components of the DPIS 2000 System, like the components of the AirSeal Predicate Devices, are single use devices that will be supplied sterile by means of gamma radiation. Finally, the packaging of the above mentioned components of the DPIS 2000 System is identical to the packaging of the AirSeal Predicate Device single use components.

Like the AirSeal Predicate Devices, the DPIS 2000 System incorporates a gas seal technology and, as a result, does not depend upon rubber mechanical seals employed in existing trocars and cannulae to maintain abdominal pressure. The principal distinction of the AirSeal® Trocar & Cannula is the absence of a duckbill type of mechanical seal to maintain pneumoperitoneum during the course of the laparoscopic procedures. The seal is created by achieving a state of equilibrium

within the bore of the cannula tube. This equilibrium or barrier, which is created within the cannula using an uninterrupted flow of CO_2, allows the free passage of various tools (graspers, clip appliers, etc.) into and out of the abdominal cavity while at the same time maintaining insufflation pressures within the abdomen. The method that is used by the insufflation, recirculation and filtration unit of the DPIS 2000 System (the "DPIS 2000 Unit") to create and maintain the "pressure barrier" is similar to the method employed by the AirSeal Predicate Devices.

Like the recirculation and filtration unit of the AirSeal Predicate Devices (the "DPS 1000 Unit"), the DPIS 2000 Unit creates a "pressure barrier" by circulating gas to and from the Cannula, which is accomplished by (b(b)(4) [redacted] The differences between the DPS 1000 and the DPIS 2000 Unit are the following:

- The DPIS 2000 Unit is a software controlled device whereas the DPS 1000 Unit is controlled pneumatically;
- The DPIS 2000 Unit is equipped with a LED touch screen;
- Unlike the DPS1000 Unit, the DPIS 2000 Unit performs an initial self check and is suitable for operation after successfully passing the initial self check;
- Unlike the DPS 1000 Unit, which uses an external standard insufflator as a gas source to create and maintain the gas seal, the DPIS 2000 Unit incorporates the insufflation technology of the Insufflator Predicate Device;
- Unlike the DPS 1000 Unit, which only operates in the AirSeal mode that includes smoke evacuation as an ancillary and subordinate function, the DPIS 2000 Unit integrates three distinct modes of operation: a Standard Insufflation Mode, a separate Smoke Evacuation Mode and an AirSeal® Mode;
- (b)(4) [redacted]

- (b)(4) [redacted] (b)(4) [redacted]
- The DPIS 2000 Unit is designed with a safety feature while in the AirSeal Mode that constantly monitors the level of CO_2 that is returned from the Cannula to the DPIS 2000 Unit. A visual and acoustic warning is activated and the set abdominal pressure is automatically reduced to 12 mmHg if the CO_2 level drops for more than 30 seconds. (b)(4) [redacted] If the leak is still not resolved within this timeframe, the insufflation stops;
- The DPIS 2000 Unit is also designed with a (b)(4) [redacted] sensor, located in the filter socket of the DPIS 2000 Unit (also referred to as the filter receptacles), that monitors the fluid level in the filter housing of the AirSeal Tube Set in the event of unintended ingress of fluid. If the filter housing is filled with fluid up to the low or high fluid level, visual and acoustic warnings are activated. The user is instructed to change the tube set and the AirSeal Mode finally shuts down.

3. Similarities and Differences in Technology and Design between the DPIS 2000 System and the Insufflator Predicate Device

The insufflation technological characteristics of the DPIS 2000 Unit are identical to technological characteristics of the Insufflator Predicate Device. Like the Insufflator Predicate Device, the DPIS 2000 Unit is a microprocessor controlled device that incorporates the following major components: (b)(4) [redacted] (b)(4) [redacted]. Like the Insufflation Predicate Device, the DPIS 2000 Unit

performs an initial self check and is only ready for operation after successfully passing the initial self check.

The pressure relief and reduction concept of both the Insufflator Predicate device and the DPIS 2000 Unit is identical. (b)(4) [redacted] In addition, both devices are equipped with a proportional valve, (b)(4) [redacted] that governs the pressure and flow. Finally, both the Insufflation Predicate Device and the proposed device are designed with an electrical safety valve, located behind the proportional valve, which automatically stops further gas flow into the body cavity if a malfunction of the proportional valve is detected.

The DPIS 2000 Unit, like the Insufflator Predicate Device allows for flow settings in the range of 1 l/min to 40 l/min and both the set flow (the DPIS 2000 Unit displays the set flow level) and the actual flow value are shown on the touch screen display during the operation. The flow measurement of both the DPIS 2000 Unit and the Insufflator Predicate Device is performed by a "differential pressure measurement", which calculates the flow by measuring the pressure in front of and behind a known resistance.

In addition, both the DPIS 2000 Unit and the Insufflator Predicate Device, allow for pressure settings in the range of 1 mmHg to 20 mmHg, but are designed with a safety threshold at 15 mmHg that requires positive action on the part of the user if a pressure setting above 15 mmHg is desired. Both the set pressure value and the actual pressure value are shown on the touch screen display during the operation. (b)(4) [redacted] In case of a malfunction of one sensor, a visual and acoustic warning is activated and the insufflation stops immediately. Both the Insufflator Predicate Device and the proposed device are designed with an automatic venting system that is activated to

DEPARTMENT OF HEALTH & HUMAN SERVICES

Public Health Service

Food and Drug Administration
10903 New Hampshire Avenue
Document Control Room W-O66-0609
Silver Spring, MD 20993-0002

NOV - 5 2009

SuriQuest, Inc.
% Mr. Kourosh Azarbarzin
Founder and CEO
12 Cascade Boulevard, Suite 2B
Orange, Connecticut 06477

Re: K092504
Trade/Device Name: SurgiQuest AirSeal™ Optical Trocar & Cannula System
Regulation Number: 21 CFR 876.1500
Regulation Name: Endoscope and accessories
Regulatory Class: Class II
Product Code: GCJ
Dated: October 6, 2009
Received: October 16, 2009

Dear Mr. Azarbarzin:

We have reviewed your Section 510(k) premarket notification of intent to market the device referenced above and have determined the device is substantially equivalent (for the indications for use stated in the enclosure) to legally marketed predicate devices marketed in interstate commerce prior to May 28, 1976, the enactment date of the Medical Device Amendments, or to devices that have been reclassified in accordance with the provisions of the Federal Food, Drug, and Cosmetic Act (Act) that do not require approval of a premarket approval application (PMA). You may, therefore, market the device, subject to the general controls provisions of the Act. The general controls provisions of the Act include requirements for annual registration, listing of devices, good manufacturing practice, labeling, and prohibitions against misbranding and adulteration.

If your device is classified (see above) into either class II (Special Controls) or class III (PMA), it may be subject to additional controls. Existing major regulations affecting your device can be found in the Code of Federal Regulations, Title 21, Parts 800 to 898. In addition, FDA may publish further announcements concerning your device in the Federal Register.

Please be advised that FDA's issuance of a substantial equivalence determination does not mean that FDA has made a determination that your device complies with other requirements of the Act or any Federal statutes and regulations administered by other Federal agencies. You must comply with all the Act's requirements, including, but not limited to: registration and listing

(21 CFR Part 807); labeling (21 CFR Part 801); medical device reporting (reporting of medical device-related adverse events) (21 CFR 803); good manufacturing practice requirements as set forth in the quality systems (QS) regulation (21 CFR Part 820); and if applicable, the electronic product radiation control provisions (Sections 531-542 of the Act); 21 CFR 1000-1050.

If you desire specific advice for your device on our labeling regulation (21 CFR Part 801), please go to http://www.fda.gov/AboutFDA/CentersOffices/CDRH/CDRHOffices/ucm115809.htm for the Center for Devices and Radiological Health's (CDRH's) Office of Compliance. Also, please note the regulation entitled, "Misbranding by reference to premarket notification" (21CFR Part 807.97). For questions regarding the reporting of adverse events under the MDR regulation (21 CFR Part 803), please go to http://www.fda.gov/cdrh/mdr/ for the CDRH's Office of Surveillance and Biometrics/Division of Postmarket Surveillance.

You may obtain other general information on your responsibilities under the Act from the Division of Small Manufacturers, International and Consumer Assistance at its toll-free number (800) 638-2041 or (301) 796-7100 or at its Internet address http://www.fda.gov/cdrh/industry/support/index.html.

Sincerely yours,

For Peter D

Mark N. Melkerson
Director
Division of Surgical, Orthopedic
and Restorative Devices
Office of Device Evaluation
Center for Devices and
Radiological Health

Enclosure

STATEMENT FOR INDICATIONS FOR USE

510(k) Number: K092504

Device Name: SurgiQuest AirSeal™ Optical Trocar & Cannula System

Indications for Use: The SurgiQuest AirSeal™ Optical Trocar & Cannula System has applications in abdominal and thoracic minimally invasive surgical procedures to establish a path of entry for endoscopic instruments and to evacuate smoke. The trocar may be used with or without visualization for primary and secondary insertions.

Prescription Use: Yes

DO NOT WRITE BELOW THIS LINE-CONTINUE ON ANOTHER PAGE IF NEEDED

Concurrence of CDRH, Office of Device Evaluation

Neil R Ogden for mxm
(Division Sign-Off)
Division of Surgical, Orthopedic,
and Restorative Devices

510(k) Number K092504

K083211

DEC 15 2008

510(k) SUMMARY OF SAFETY & EFFECTIVENESS

SUBMITTER	SurgiQuest, Inc. 12 Cascade Blvd. – Suite 2B Orange, CT 06477
CONTACT PERSON	Kourosh Azarbarzin Founder & C.E.O. - SurgiQuest, Inc.
DATE PREPARED	May 25, 2007
CLASSIFICATION	Laparoscopic trocar, GCJ Class: II
COMMON NAME	Disposable Endoscopic Trocar & Cannula
PROPRIETARY NAME	SurgiQuest™ AirSeal™ Optical Trocar & Cannula System *(Trademark name to be determined)*
PREDICATE DEVICE(S)	Surgiport™ Blunt Tip Trocar U.S. Surgical Corp. (Norwalk, CT) K903419 EndoPath III Trocar System Ethicon Endo-Surgery, Inc. (Cincinnati, OH) K032676 Elastomeric Optical Trocar & Cannula SurgiQuest, Inc. (Orange, CT) K063859 LapEvac Filtration Device for the Pneumoperitoneum Buffalo Filter (Buffalo, NY) K052797 Sun Medical Smoke / Fluid Evacuation System Sun Medical Inc. (Arlington, TX) K911154
DEVICE DESCRIPTION	The subject is a surgical trocar and cannula composed of medical grade materials. The device is used to create and maintain a port of entry during endoscopic surgery and evacuate surgical smoke. It incorporates a gas seal utilizing CO_2, to maintain pneumoperitoneum during the course of surgery. It is supplied with a re-circulation and filtration pump

designed–to maintain pneumoperitoneum and minimize CO_2 consumption during minimally invasive surgery. The recirculation and filtration pump is reusable. The AirSeal™ Trocar & Cannula and Tube Set are fully disposable and are intended for single use only.

TESTING

The device has been tested to show its ability to create and maintain a port of entry during simulated laparoscopic surgery. It has also been tested to show its ability to maintain adequate pneumoperitoneum during the course of laparoscopic surgery and to aid in the evacuation of smoke.
(See Addendum 3 for test data regarding smoke evacuation)

The unit has been tested for safety and emissions in accordance with IEC60601-1, General Requirements for Safety 1: Collateral Standard: Safety Requirements for Medical Electrical Systems and IEC60601-1-2, General Requirements for Safety – Collateral Standard: Electromagnetic Compatibility – Requirements and Tests.

Sterility validation is in accordance with ISO 11137:2006 Sterilization of health care products -- Radiation -- Part 1: Requirements for development, validation and routine control of a sterilization process for medical devices and AAMI TIR 27:2001, Sterilization of Healthcare Products – Radiation Sterilization – Substantiation of 25kGY as a Sterilization Dose - Method VD Max
A Sterility Assurance Level (SAL) of 10^{-6} is achieved.

DEPARTMENT OF HEALTH & HUMAN SERVICES

Public Health Service

Food and Drug Administration
9200 Corporate Boulevard
Rockville MD 20850

DEC 15 2008

Mr. Kourosh Azarbarzin
Founder & CEO
SurgiQuest, Incorporated
12 Cascade Boulevard, Suite 2B
ORANGE CT 06477

Re: K083211
Trade/Device Name: SurgiQuest™ AirSeal™ Optical Trocar and Cannula System
Regulation Number: 21 CFR 876.1500
Regulation Name: Endoscope and accessories
Regulatory Class: II
Product Code: GCJ
Dated: October 1, 2008
Received: October 31, 2008

Dear Mr. Azarbarzin:

We have reviewed your Section 510(k) premarket notification of intent to market the device referenced above and have determined the device is substantially equivalent (for the indications for use stated in the enclosure) to legally marketed predicate devices marketed in interstate commerce prior to May 28, 1976, the enactment date of the Medical Device Amendments, or to devices that have been reclassified in accordance with the provisions of the Federal Food, Drug, and Cosmetic act (Act) that do not require approval of a premarket approval application (PMA). You may, therefore, market the device, subject to the general controls provisions of the Act. The general controls provisions of the Act include requirements for annual registration, listing of devices, good manufacturing practice, labeling, and prohibitions against misbranding and adulteration.

If your device is classified (see above) into either class II (Special Controls) or class III (PMA), it may be subject to such additional controls. Existing major regulations affecting your device can be found in the Code of Federal Regulations, Title 21, Parts 800 to 898. In addition, FDA may publish further announcements concerning your device in the Federal Register.

Please be advised that FDA's issuance of a substantial equivalence determination does not mean that FDA has made a determination that your device complies with other requirements of the Act or any Federal statutes and regulations administered by other Federal agencies. You must comply with all the Act's requirements, including, but not limited to: registration and listing (21 CFR Part 807); labeling (21 CFR Part 801); good manufacturing practice requirements as set forth in the quality systems (QS) regulation (21 CFR Part 820); and if applicable, the electronic product radiation control provisions (Sections 531-542 of the Act); 21 CFR 1000-1050.

This letter will allow you to begin marketing your device as described in your Section 510(k) premarket notification. The FDA finding of substantial equivalence of your device to a legally marketed predicate device results in a classification for your device and thus, permits your device to proceed to the market.

If you desire specific advice for your device on our labeling regulation (21 CFR Part 801), please contact the Office of Compliance at one of the following numbers, based on the regulation number at the top of this letter:

21 CFR 876.xxx	(Gastroenterology/Renal/Urology	240-276-0115
21 CFR 884.xxx	(Obstetrics/Gynecology)	240-276-0115
21 CFR 894.xxx	(Radiology)	240-276-0120
Other		240-276-0100

Also, please note the regulation entitled, "Misbranding by reference to premarket notification" (21CFR Part 807.97). For questions regarding postmarket surveillance, please contact CDRH's Office of Surveillance and Biometrics' (OSB's) Division of Postmarket Surveillance at 240-276-3474. For questions regarding the reporting of device adverse events (Medical Device Reporting (MDR)), please contact the Division of Surveillance Systems at 240-276-3464. You may obtain other general information on your responsibilities under the Act from the Division of Small Manufacturers, International and Consumer Assistance at its toll-free number (800) 638-2041 or (240) 276-3150 or at its Internet address http://www.fda.gov/cdrh/industry/support/index.html.

Sincerely yours,

Joyce M. Whang

Joyce M. Whang, Ph.D.
Acting Director, Division of Reproductive,
Abdominal, and Radiological Devices
Office of Device Evaluation
Center for Devices and Radiological Health

Enclosure

SurgiQuest, Inc.
AirSeal™ Optical Trocar & Cannula System
Special 510(k) Notification

STATEMENT FOR INDICATIONS FOR USE

510(k) Number: K083211

Device Name: SurgiQuest™ AirSeal™ Optical Trocar & Cannula System *(Trademark name to be determined)*

Indications for Use: The SurgiQuest AirSeal™ Optical Trocar & Cannula System has applications in abdominal and thoracic minimally invasive surgical procedures to establish a path of entry for endoscopic instruments and to evacuate smoke. The trocar may be used with or without visualization for primary and secondary insertions.
(Note: This Indication has been expanded to include smoke evacuation)

Prescription Use: Yes

DO NOT WRITE BELOW THIS LINE-CONTINUE ON ANOTHER PAGE IF NEEDED

Concurrence of CDRH, Office of Device Evaluation

(Division Sign-Off)
Division of Reproductive, Abdominal,
and Radiological Devices
510(k) Number K083211

K063367

510(k) SUMMARY

MAY 23 2007

Submitter:

W.O.M. WORLD OF MEDICNE AG
Alte Poststraße 11
96337 Ludwigsstadt
Germany
Phone: +49 9263 877 131
Fax: +49 9263 877 137

Official Correspondent:

Susanne Raab

Regulatory Consultant
1480 Cambridge Street
Cambridge, MA 02139

Phone: 617 547 0628
Fax: 617 520 2136
e-mail: sbraab@comcast.net

Trade Name: 45L CORE Insufflator F114

Common Name: Carbon Dioxide Insufflator for Laparoscopy and Endoscopic Vessel Harvesting

Classification Name: Laparoscopic Insufflator, 21 C.F.R. 884.1730
Insufflator, Automatic Carbon Dioxide for Endoscope, 21 C.F.R. § 876.1500

Regulatory Class: II

Product Code: HIF / GCJ

Predicate Devices:

1. 40 L High Flow Insufflator F113, (K060723)
2. HI-FLO Therme Pneu 45, (K031014)
3. Stryker Heated Insufflator Tube Set, (K003792)
4. Surgiflator 20, Single-Use Heatable Tube Set, (K950035)

Device Description: The 45L CORE Insufflator F114 is a microprocessor controlled CO2 insufflator designed with a high flow application, a low flow application, a bariatric application and a vessel harvesting application. The device incorporates the following major components and features: a casing, a

world power supply, pressure reducers, a venting system, a fluid sensor, a gas heater and various setting symbols and display elements. The device is equipped with a continuous pressure measurement mode and redundant discontinuos pressure measurement mode that controls the conformity of the actual pressure in the peritoneal or extraperitoneal cavity with the pre-set nominal pressure. In addition, a software controlled active pressure reduction ensures that the preset nominal pressure value conforms to the actual pressure that is measured in the cavity. Finally, the 45L CORE Insufflator F114 is designed with several alarms to inform the operator in case of an overpressure. The device is to be used with specially designed single-use tubing sets.

Intended Use / Indication for Use:

The 45L CORE Insufflator F114 is a CO2 insufflator intended for use in diagnostic and/or therapeutic endoscopic procedures to distend a cavity by filling it with gas. The high flow application, the low flow application and the bariatric application of the device are each indicated for use in facilitating the use of a laparoscope by filling the peritoneal cavity with gas to distend it. The low flow application of the device is indicated for pediatric use. The vessel harvesting application of the 45L CORE Insufflator F114 is indicated for use during endoscopic vessel harvesting procedures to create a cavity along the saphenous vein and/or radial artery during endoscopic vessel harvesting procedures.

Substantial Equivalence:

The 45L CORE Insufflator F114 (the "F114") is substantially equivalent to the 40 L High Flow Insufflator F113 (the "F113") and to HI-FLO Therme Pneu 45 (the "HI-FLO"). Specifically, both the F114 and the predicate devices F113 and HI-FLO are CO2 insufflators intended for use during diagnostic and/or therapeutic endoscopic procedures to distend a cavity by filling it with gas. In addition, all three devices are indicated for use in facilitating the use of a laparoscope by filling the peritoneal cavity with gas to distend it. The technical characteristics of the F114 are equivalent to those of the predicate devices. The minor technological differences between the F114 and the predicate devices are primarily related to the implementation of a special Bariatric Mode similar to the existing High Flow Mode of the F113 and identical with regard to the maximum flow performance to the High Flow Mode of the HI-FLO. In addition, the increase of the maximum gas supply pressure in the Bariatric Mode to 70 mmHg and in the High Flow Mode

to 65 mmHg and 60 mmHg (Veress Mode) does not raise new questions of safety and effectiveness. Performance testing of the bariatric mode and continuous pressure measurement in the different modes demonstrate that the minor technical differences between the F114 and the predicate devices do not raise new questions of safety or effectiveness.

In addition, the tube sets to be used in conjunction with the F114 are substantially equivalent to the Stryker Heated Insufflator Tube Set and the single-use heatable tube sets for use in conjunction with the Surgiflator 20. Both the proposed tube sets and the predicate devices are used during endosopic procedures to provide a path for the insufflation gas from the insufflation device to the patient. In addition, the technical characteristics of the proposed tube sets are equivalent to those of the predicate devices. The major difference between the proposed tube sets and the predicate devices consists of the design of the connector of the proposed tube sets, which enables the connection of the insufflation tubing and the tubing for continuous pressure measurement and the heating function in one step. The minor differences between the tube sets to be used in conjunction with the F114 and the predicate devices Stryker Heated Insufflator Tube Set and the single-use heatable tube sets for use in conjunction with the Surgiflator 20 do not raise new questions of safety and effectiveness.

Sterilization: The insufflation tube sets to be used in conjunction with the F114 will be sterilized in accordance with EN 550 "Sterilization of Medical Devices – Validation and Routine Control of Ethylene Oxide Sterilization" method C. Residual ethylene oxide data shows that the limit of residual gas (250 ppm) will not be exceeded. In accordance with the European Standard DIN EN 14698-1 and EN1174, Part 1-3 the used sterility assurance level (SAL) to detect the quantity of bioburden was $\leq$ 10-6.

Biocompatibility: The components of insufflation tube sets that come into short term indirect contact with the patient consist of materials that are identical to those used in the predicate devices. In addition, all used materials have been well characterized chemically and physically in the published literature and have a long history of safe use in regards to biocompatibility.

Performance Data: Bench testing demonstrates the safety and effectiveness of the F114.

Date Prepared: November 3, 2006

DEPARTMENT OF HEALTH & HUMAN SERVICES

Food and Drug Administration
9200 Corporate Blvd.
Rockville MD 20850

W.O.M. World of Medicine AG
c/o Ms. Susanne Raab
Regulatory Consultant
1480 Cambridge Street
CAMBRIDGE MA 02139

MAY 23 2007

Re: K063367
Trade/Device Name: 45L Core Insufflator F114
Regulation Number: 21 CFR §884.1730
Regulation Name: Laparoscopic insufflator
Regulatory Class: II
Product Code: HIF
Dated: May 10, 2007
Received: May 14, 2007

Dear Ms. Raab:

We have reviewed your Section 510(k) premarket notification of intent to market the device referenced above and have determined the device is substantially equivalent (for the indications for use stated in the enclosure) to legally marketed predicate devices marketed in interstate commerce prior to May 28, 1976, the enactment date of the Medical Device Amendments, or to devices that have been reclassified in accordance with the provisions of the Federal Food, Drug, and Cosmetic Act (Act) that do not require approval of a premarket approval application (PMA). You may, therefore, market the device, subject to the general controls provisions of the Act. The general controls provisions of the Act include requirements for annual registration, listing of devices, good manufacturing practice, labeling, and prohibitions against misbranding and adulteration.

If your device is classified (see above) into either class II (Special Controls) or class III (Premarket Approval), it may be subject to such additional controls. Existing major regulations affecting your device can be found in the Code of Federal Regulations, Title 21, Parts 800 to 898. In addition, FDA may publish further announcements concerning your device in the Federal Register.

Please be advised that FDA's issuance of a substantial equivalence determination does not mean that FDA has made a determination that your device complies with other requirements of the Act or any Federal statutes and regulations administered by other Federal agencies. You must comply with all the Act's requirements, including, but not limited to registration and listing (21 CFR Part 807); labeling (21 CFR Part 801); good manufacturing practice requirements as set forth in the quality systems (QS) regulation (21 CFR Part 820); and if applicable, the electronic product radiation control provisions (Sections 531-542 of the Act); 21 CFR 1000-1050.

This letter will allow you to begin marketing your device as described in your Section 510(k) premarket notification. The FDA finding of substantial equivalence of your device to a legally marketed predicate device results in a classification for your device and thus, permits your device to proceed to the market.

If you desire specific advice for your device on our labeling regulation (21 CFR Part 801), please contact the Office of Compliance at one of the following numbers, based on the regulation number at the top of this letter:

21 CFR 876.xxxx	(Gastroenterology/Renal/Urology)	240-276-0115
21 CFR 884.xxxx	(Obstetrics/Gynecology)	240-276-0115
21 CFR 892.xxxx	(Radiology)	240-276-0120
Other		240-276-0100

Also, please note the regulation entitled, "Misbranding by reference to premarket notification" (21 CFR 807.97). You may obtain other general information on your responsibilities under the Act from the Division of Small Manufacturers, International and Consumer Assistance at its toll-free number (800) 638-2041 or (301) 443-6597 or at its Internet address http://www.fda.gov/cdrh/industry/support/index.html

Sincerely yours,

Nancy C. Brogdon

Nancy C. Brogdon
Director, Division of Reproductive,
Abdominal, and Radiological Devices
Office of Device Evaluation
Center for Devices and Radiological Health

Enclosure

Indication for Use

510(k) Number (if known): K063367

Device Name: 45L CORE Insufflator F114

Indications for Use:

The 45L CORE Insufflator F114 is a CO2 insufflator intended for use in diagnostic and/or therapeutic endoscopic procedures to distend a cavity by filling it with gas. The high flow application, the low flow application and the bariatric application of the device are each indicated for use in facilitating the use of a laparoscope by filling the peritoneal cavity with gas to distend it. The low flow application of the device is indicated for pediatric use. The vessel harvesting application of the F114 is indicated for use during endoscopic vessel harvesting procedures to create a cavity along the saphenous vein and/or radial artery during endoscopic vessel harvesting procedures.

Prescription Use __X___ (Part 21 CFR 801 Subpart D) AND/OR Over-The-Counter Use _____ (21 CFR 801 Subpart C)

(PLEASE DO NOT WRITE BELOW THIS LINE-CONTINUE ON ANOTHER PAGE OF NEEDED)

Concurrence of CDRH, Office of Device Evaluation (ODE)

Nancy C Brogdon

(Division Sign-Off)
Division of Reproductive, Abdominal, and Radiological Devices
510(k) Number K063367

K071571

510(k) SUMMARY OF SAFETY & EFFECTIVENESS

JUL 30 2007

SUBMITTER	SurgiQuest, Inc. 12 Cascade Blvd. – Suite 2B Orange, CT 06477
CONTACT PERSON	Kourosh Azarbarzin Founder & C.E.O. - SurgiQuest, Inc.
DATE PREPARED	May 25, 2007
CLASSIFICATION	Laparoscopic trocar, GCJ Class: II
COMMON NAME	Disposable Endoscopic Trocar & Cannula
PROPRIETARY NAME	SurgiQuest™ AirSeal™ Optical Trocar & Cannula System *(Trademark name to be determined)*
PREDICATE DEVICE(S)	Surgiport™ Blunt Tip Trocar U.S. Surgical Corp. (Norwalk, CT) K903419 EndoPath III Trocar System Ethicon Endo-Surgery, Inc. (Cincinnati, OH) K032676 Elastomeric Optical Trocar & Cannula SurgiQuest, Inc. (Orange, CT) K063859 LapEvac Filtration Device for the Pneumoperitoneum Buffalo Filter (Buffalo, NY) K052797 Sun Medical Smoke / Fluid Evacuation System Sun Medical Inc. (Arlington, TX) K911154
DEVICE DESCRIPTION	The subject is a surgical trocar and cannula composed of medical grade materials. The device is used to create and maintain a port of entry during endoscopic surgery. It incorporates a gas seal utilizing CO_2, to maintain pneumoperitoneum during the course of surgery. It is supplied with a re-circulation and filtration pump designed to maintain pneumoperitoneum and minimize CO_2 consumption during

minimally invasive surgery. The recirculation and filtration pump is reusable. The AirSeal™ Trocar & Cannula and Tube Set are fully disposable and are intended for single use only.

TESTING

The device has been tested to show its ability to create and maintain a port of entry during simulated laparoscopic surgery. It has also been tested to show its ability to maintain adequate pneumoperitoneum during the course of simulated laparoscopic surgery.

The unit will be tested for safety and emissions in accordance with IEC60601-1, General Requirements for Safety 1: Collateral Standard: Safety Requirements for Medical Electrical Systems and IEC60601-1-2, General Requirements for Safety – Collateral Standard: Electromagnetic Compatibility – Requirements and Tests.

Sterility validation is in accordance with ISO 11137:2006 Sterilization of health care products -- Radiation -- Part 1: Requirements for development, validation and routine control of a sterilization process for medical devices and AAMI TIR 27:2001, Sterilization of Healthcare Products – Radiation Sterilization – Substantiation of 25kGY as a Sterilization Dose - Method VD Max
A Sterility Assurance Level (SAL) of 10^{-6} is achieved.

DEPARTMENT OF HEALTH & HUMAN SERVICES

Public Health Service

Food and Drug Administration
9200 Corporate Boulevard
Rockville MD 20850

SurgiQuest, Inc.
% Mr. Kourosh Azarbarzin
Founder & CEO
12 Cascade Blvd., Suite 2B
Orange, CT 06477

JUL 30 2007

Re: K071571
Trade/Device Name: SurgiQuest™ AirSeal™ Optical Trocar & Cannula System
Regulation Number: 21 CFR 876.1500
Regulation Name: Endoscope and accessories
Regulatory Class: II
Product Code: GCJ
Dated: June 6, 2007
Received: June 8, 2007

Dear Mr. Azarbarzin:

We have reviewed your Section 510(k) premarket notification of intent to market the device referenced above and have determined the device is substantially equivalent (for the indications for use stated in the enclosure) to legally marketed predicate devices marketed in interstate commerce prior to May 28, 1976, the enactment date of the Medical Device Amendments, or to devices that have been reclassified in accordance with the provisions of the Federal Food, Drug, and Cosmetic Act (Act) that do not require approval of a premarket approval application (PMA). You may, therefore, market the device, subject to the general controls provisions of the Act. The general controls provisions of the Act include requirements for annual registration, listing of devices, good manufacturing practice, labeling, and prohibitions against misbranding and adulteration.

If your device is classified (see above) into either class II (Special Controls) or class III (PMA), it may be subject to such additional controls. Existing major regulations affecting your device can be found in the Code of Federal Regulations, Title 21, Parts 800 to 898. In addition, FDA may publish further announcements concerning your device in the Federal Register.

Please be advised that FDA's issuance of a substantial equivalence determination does not mean that FDA has made a determination that your device complies with other requirements of the Act or any Federal statutes and regulations administered by other Federal agencies. You must comply with all the Act's requirements, including, but not limited to: registration and listing (21 CFR Part 807); labeling (21 CFR Part 801); good manufacturing practice requirements as set forth in the quality systems (QS) regulation (21 CFR Part 820); and if applicable, the electronic product radiation control provisions (Sections 531-542 of the Act); 21 CFR 1000-1050.

This letter will allow you to begin marketing your device as described in your Section 510(k) premarket notification. The FDA finding of substantial equivalence of your device to a legally marketed predicate device results in a classification for your device and thus, permits your device to proceed to the market.

If you desire specific advice for your device on our labeling regulation (21 CFR Part 801), please contact the Office of Compliance at (240) 276-0115 Also, please note the regulation entitled, "Misbranding by reference to premarket notification" (21CFR Part 807.97). You may obtain other general information on your responsibilities under the Act from the Division of Small Manufacturers, International and Consumer Assistance at its toll-free number (800) 638-2041 or (240) 276-3150 or at its Internet address http://www.fda.gov/cdrh/industry/support/index.html.

Sincerely yours,

Mark N. Melkerson
Director
Division of General, Restorative
and Neurological Devices
Office of Device Evaluation
Center for Devices and
Radiological Health

Enclosure

STATEMENT FOR INDICATIONS FOR USE

510(k) Number: _____

Device Name: SurgiQuest™ AirSeal™ Optical Trocar & Cannula System *(Trademark name to be determined)*

Indications for Use: The SurgiQuest AirSeal™ Optical Trocar & Cannula System has applications in abdominal and thoracic minimally invasive surgical procedures to establish a path of entry for endoscopic instruments. The trocar may be used with or without visualization for primary and secondary insertions.

Prescription Use: Yes

(Division Sign-Off)
Division of General, Restorative, and Neurological Devices

510(k) Number K071571

DO NOT WRITE BELOW THIS LINE-CONTINUE ON ANOTHER PAGE IF NEEDED

Concurrence of CDRH, Office of Device Evaluation

13. Proposed Labeling

Please refer to the attached device labels, the operator's manual and to the instructions for use package insert of the proposed device.

13. Proposed Labeling

As specified above, the cannula, trocars and tube sets of the SurgiQuest AirSeal® Optical Trocar & Cannula System with integrated Insufflator DPIS 2000 (the "DPIS 2000 System") are single use components that will be supplied sterile. Each of these components is supplied in a blister tray package that is sealed using a pre-printed Tyvek blister lid with adhesive backed labels permanently affixed to the blister for lot identification and expiration date. The labels comply with **EN 980, "Graphical symbols for use in the labeling of medical devices"**. Six such blister packs are supplied in an SBS multi-pack "display box" suitable for shelf storage and dispensing. Please refer to sample copies of each of the labels to be affixed to the following packaging configurations:

- Trocar & Cannula – unit pack
- Trocar & Cannula – multi-pack (display box)
- Filtered Tube Set – unit pack
- Filtered Tube Set – multi-pack (display box)
- Instructions for Use (IFU) leaflet
- Capital Equipment Operators Manual

Attached hereto as **Attachment 1**.

In addition, each display box will contain a package insert ("Instructions for Use"), a copy of which is attached hereto as **Attachment 2**.

An operator's manual will accompany each insufflation, recirculation and filtration unit of the DPIS 2000 System (the "DPIS 2000 Unit"). Please refer the draft of the operator's manual for the DPIS 2000 Unit attached hereto as **Attachment 3**, which was prepared in accordance with **CFR Part 801, Labeling, Sub-Part A –**

General Labeling Provisions", EN 60417, "Graphical Symbols for use in the labeling of medical devices" and **ISO 7000, "Graphical symbols for use on equipment".**

Attachment 1

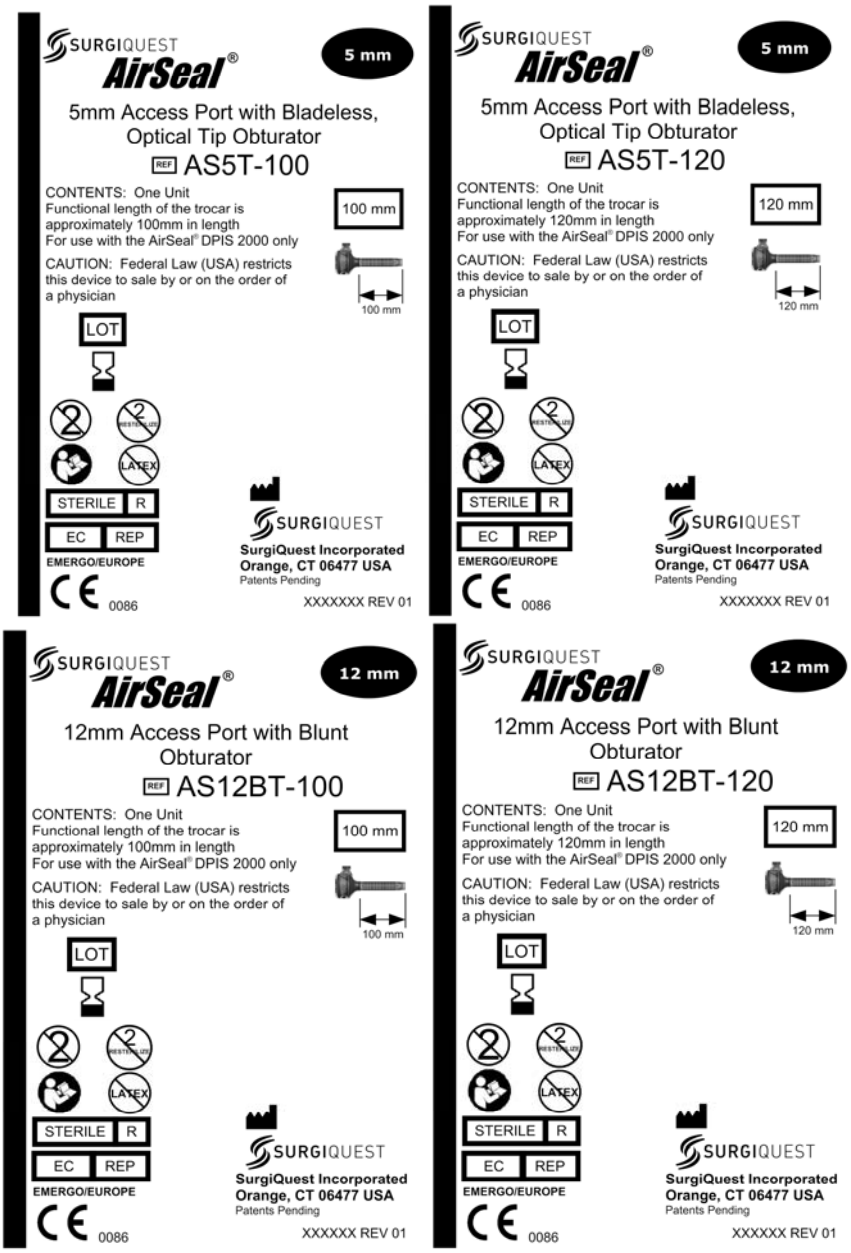

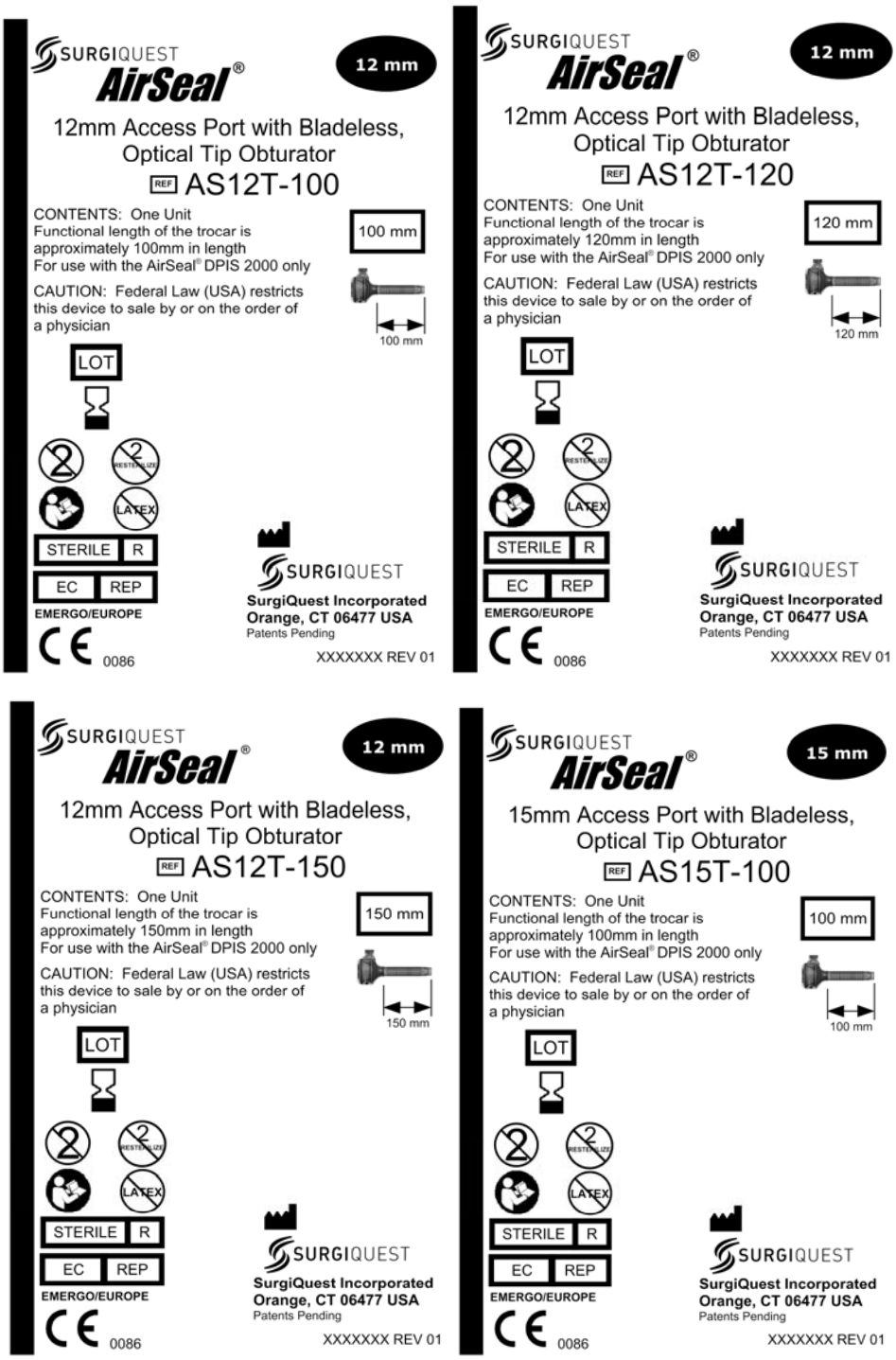

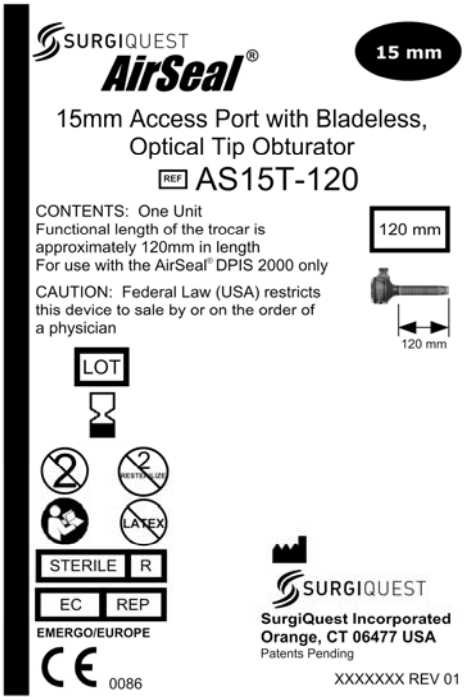

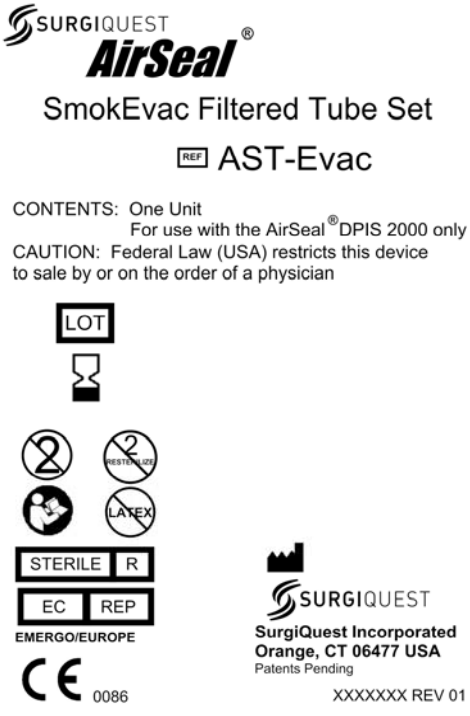

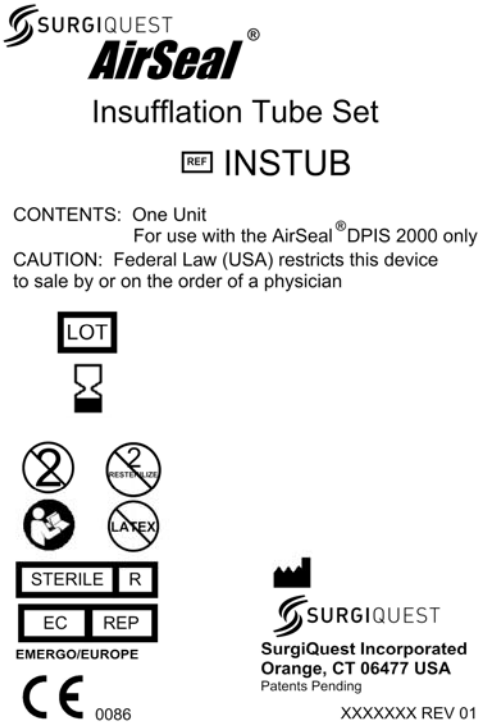

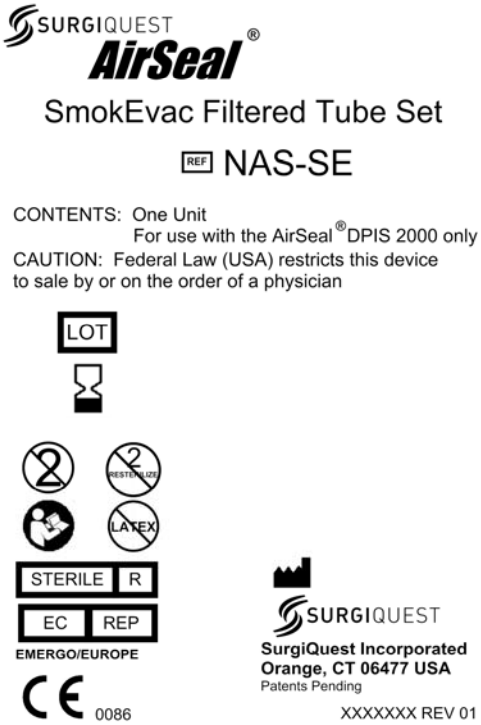

Attachment 2

SurgiQuest AirSeal® Optical Trocar
SurgiQuest AirSeal® Blunt Tip Trocar
SurgiQuest AirSeal® Cannula
SurgiQuest AirSeal® Tube Set
SurgiQuest Smoke Evacuation Tube Set
SurgiQuest Standard Insufflation Tube

Please read the below information carefully.
In addition, please refer to the instructions for use of the DPIS 2000 System.

Indications for Use:
The SurgiQuest AirSeal ® Optical Trocar & Cannula System with integrated Insufflator DPIS 2000 (the "DPIS 2000 System") is intended for use in diagnostic and/or therapeutic endoscopic procedures to distend a cavity by filling it with gas, to establish and maintain a path of entry for endoscopic instruments and to evacuate surgical smoke. It is indicated to facilitate the use of various laparoscopic instruments by filling the peritoneal cavity with gas to distend it, by creating and maintaining a gas sealed obstruction-free instrument path and by evacuating surgical smoke. The trocar of the DPIS 2000 System is indicated for use with or without visualization.

The DPIS 2000 System has three modes of operation:

1. **AirSeal® Mode**
2. **Smoke Evacuation Mode**
3. **Standard Insufflation Mode**

AirSeal® Mode:

When used in the AirSeal® Mode, the System is designed to provide CO_2 gas delivery with stable pneumoperitoneum and continuous smoke evacuation during laparoendoscopic surgery and requires the use of the DPIS Control Unit, AirSeal® Trocar and SmokEvac Filter Tube Set. The SmokEvac Filter Tube Set is used to connect the AirSeal® Trocar to the DPIS 2000 System Control Unit. (Figure 1)

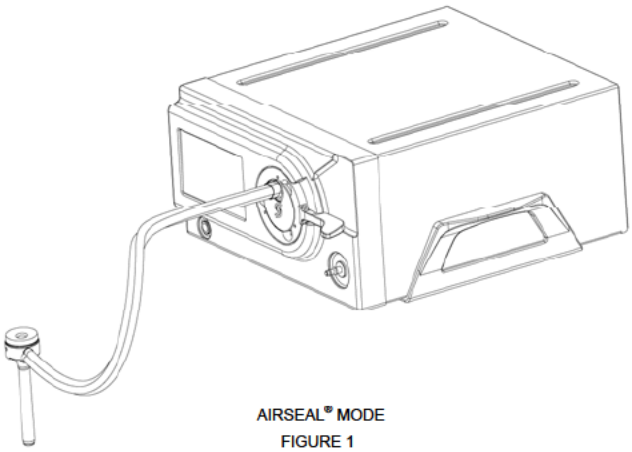

AIRSEAL® MODE
FIGURE 1

The AirSeal® Trocar is available in two configurations: a) Bladeless, Optical Tip Trocar; and b) Blunt Tip Trocar with Suture Anchor. If the AirSeal® Bladeless, Optical Tip Trocar is used for primary entry, use of a laparoscope to provide visualization is recommended to enhance safe abdominal entry. (Figure 2)

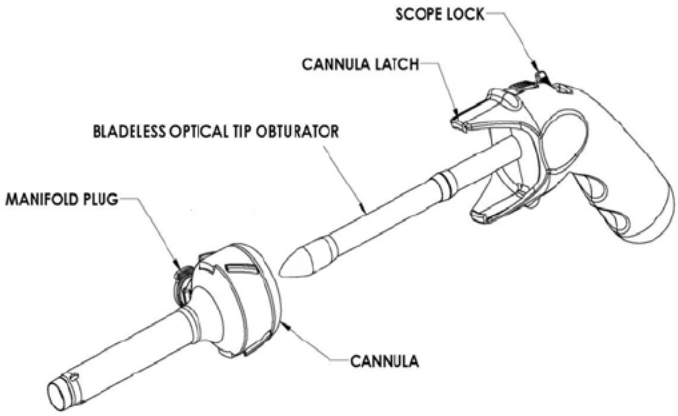

BLADELESS OPTICAL T P OBTURATOR AND CANNULA

FIGURE 2

Smoke Evacuation Mode:

When used in the Smoke Evacuation Mode, the DPIS 2000 System is designed to provide CO_2 gas delivery and continuous smoke evacuation during laparoendoscopic surgery and requires the use of the DPIS Control Unit, Conventional (*Non-AirSeal®*)Trocars and Smoke Evacuation Filter Tube Set.

During the Smoke Evacuation Mode, two commercially available conventional Trocars with standard Luer ports are required and will be used to connect the Smoke Evacuation Tube Set to provide CO_2 gas delivery along with a Smoke Evacuation pathway. The DPIS 2000 System Smoke Evacuation Tube Set is bifurcated and connects to the two commercially available trocars in a serial manner to the DPIS 2000 System Control Unit. (Figure 3)

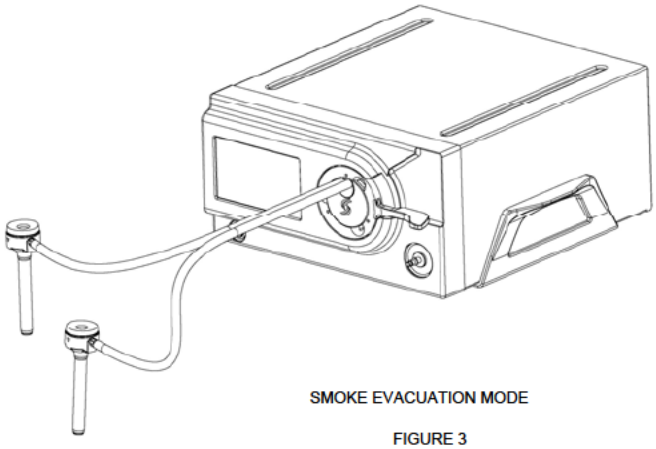

SMOKE EVACUATION MODE

FIGURE 3

Standard Insufflation Mode:

When used in Standard Insufflation Mode, the DPIS 2000 System is designed to provide CO_2 gas delivery and Standard Insufflation during laparoendoscopic surgery in similar format available from commercially available insufflators and Smoke Evacuation Filter Tube Sets, and requires the use of the DPIS Control Unit and Standard Insufflation Tube Set.

During Standard Insufflation Mode, one commercially available conventional trocar with standard Luer port is required. The Luer port connects to the Standard Insufflation Tube to provide standard insufflation and CO_2 gas

delivery. The Standard Insufflation Tube connects one commercially available trocar to the DPIS 2000 System Control Unit. (Figure 4)

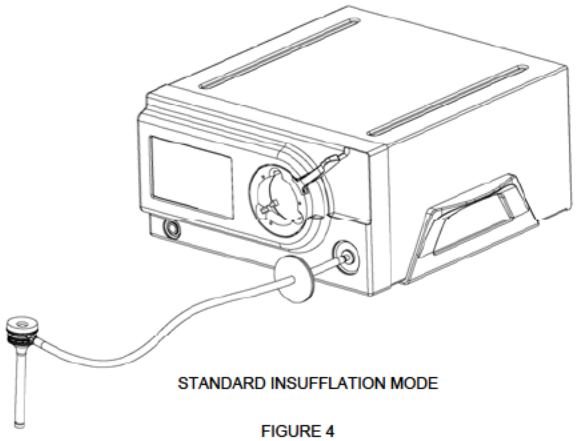

STANDARD INSUFFLATION MODE

FIGURE 4

WARNINGS:

- Failure to properly follow the instructions can lead to serious surgical consequences.
- Only qualified physicians with knowledge, experience and training in laparoscopic techniques should use the components of the DPIS 2000 System.
- These instructions for use do not include descriptions or instructions for surgical techniques or laparoscopic procedures. It is the responsibility of the physician performing any procedure to determine the appropriateness of the type of procedure to be performed and the use of these products and to determine the specific technique for each patient.
- The enclosed components of the DPIS 2000 System are only sterile if used before the expiration date and if the package is unopened and undamaged. DO NOT use after the expiration date or if package is open or damaged.
- All AirSeal® disposable devices are packaged and sterilized for single patient use only. Do not reuse, reprocess or resterilize. Reuse, reprocessing or resterilization may compromise the structural integrity of the device and/or lead to device failure which in turn may result in patient injury, illness or death. Also, reprocessing or resterilization of single use devices may create a risk of contamination and/or cause patient infection or cross-infection, including, but not limited to, the transmission of infectious disease(s) from one patient to another. Contamination of the devices may lead to injury, illness, or death of the patient.

CONTRAINDICATIONS
This DPIS 2000 System is contraindicated for use when laparoendoscopic minimally invasive techniques are contraindicated.

IMPORTANT: This package insert is designed to provide instructions for use. It is not a reference or guide for trocar insertion techniques. Successful use of the AirSeal® Bladeless, Optical Tip Trocar as the primary port after insufflation depends upon recognizing and differentiating between tissue layers. Therefore, new users should utilize the Optical Tip Trocar as a secondary port following insufflation to gain experience and procedural competence in visualizing the tissue layers. Only after achieving experience with the above technique should the Optical Tip Trocar be used as a primary port after insufflation.

INSTRUCTIONS FOR USE

General Instructions for Use of Bladeless, Optical Tip Trocar for AirSeal® Mode:

1. Using sterile technique, remove instrument from package. To avoid damage, do not flip the instrument into the sterile field.

2. The Bladeless, Optical Tip Trocar and Cannula are packaged unassembled. Assemble the Optical Tip Trocar by inserting the Optical Tip Obturator into the Cannula until they lock securely together.
3. Connect the 0° endoscope to the light source and monitor as directed in the manufacturer's instructions. Verify proper connection of the endoscope and ensure the clarity of the picture on the monitor.
4. Insert the endoscope into the opening at the proximal end of the Optical Trocar handle until it reaches the distal tip of the trocar. (See Figure 5).

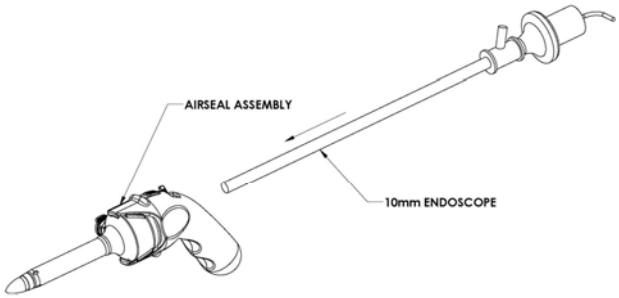

INSERTION OF ENDOSCOPE
FIGURE 5

5. Rotate the endoscope as desired. Secure the endoscope in the Optical Trocar using the scope lock, as desired. (See Figure 6).

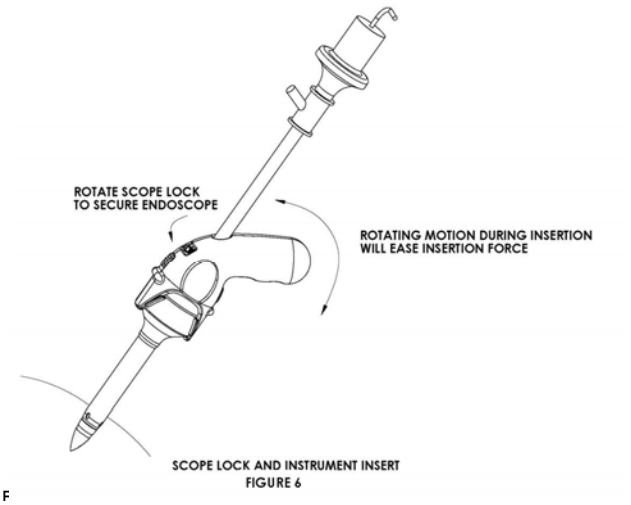

FIGURE 6

F

6. To provide a clear image on the monitor, insert the endoscope into the Bladeless, Optical Tip Trocar, touch the optical tip to a convenient soft surface, and focus the camera.
7. A single lumen, AirSeal® Veress Needle Adapter Tube extension is pre-attached to the tri-lumen SmokEvac Filter Tube Set.
8. Turn DPIS 2000 Unit Power ON.
9. At conclusion of initial self-check, select AirSeal® Mode from user menu.
10. Lever on DPIS 2000 Unit should be in UNLOCK position.
11. Insert filter housing of the AirSeal® SmokEvac Filter Tube Set into the front of DPIS 2000 Control Unit.
12. Push lever down into LOCK position.
13. Ensure that the AirSeal® Bladeless, Optical Obturator and Cannula are properly assembled.
14. If Veress needle entry is employed, connect the Veress Needle Adapter Tube Set to the Veress needle Luer port and insert in accordance with proper laparoscopic technique.
15. Push Initial Insufflation "Start" and initial Veress Needle insufflation will begin.
16. After initial insufflation has been achieved, remove Veress Needle.
17. Remove the Veress Needle Adapter Tube extension from the AirSeal® SmokEvac Filter Tube Set.
18. You are ready to insert the assembled AirSeal® Bladeless, Optical Tip Trocar.

See further instructions below for insertion of Bladeless, Optical Tip Trocar.

18. Ensure that the Optical Trocar and Cannula are properly inserted. Do not remove AirSeal® Obturator from Trocar assembly at this time.
19. Remove the blue manifold plug from the side of the AirSeal® Cannula housing and connect the distal end of the AirSeal® SmokEvac Filter Tube Set to the AirSeal® Cannula manifold and tighten.
20. Turn on AirSeal® Mode on DPIS 2000 Control Unit.
21. Set to desired flow and pressure value: default value is 5 L/m and 15 mm/Hg.
22. Remove AirSeal® Obturator from Trocar assembly.
23. Upon completion of the procedure, use standard laparoscopic technique and remove all surgical devices. Turn the DPIS 2000 Unit OFF. (**Note**: Switching DPIS 2000 Unit OFF will result in loss of pneumoperitoneum).
24. Remove Cannula from the abdominal incision. Close incision in usual manner.
25. Move lock lever on the DPIS 2000 Unit to the up or UNLOCK position.
26. Remove the AirSeal® SmokEvac Filter Tube Set from the DPIS 2000 Unit.

Follow the steps below for Optical Trocar insertion with the use of an endoscope.

1. Create an incision using standard surgical procedures which allows the Optical Trocar and Cannula assembly to be introduced. (**Note:** Incision should accommodate diameter of Cannula. An inadequate incision may cause increased resistance to insertion, increasing the required penetration force, and possibly resulting in a loss of control during entry.)
2. Introduce the AirSeal® Bladeless, Optical Tip Trocar and Cannula assembly through the skin incision using a 30° to 90° rotating motion. Apply continuous but controlled downward pressure on the handle. (See Figure 8). View the penetration of the Optical Tip Trocar tip through the individual tissue planes by using the laparoendoscope. The individual tissue planes may be seen as the Optical Trocar tip advances.
3. Remove the laparoendoscope from the Optical Tip Trocar. (Figure 7)

(Note: DO NOT remove the Optical Tip Obturator from the Cannula until the tri-lumen tubing is connected to the Cannula and the DPIS 2000 Unit is powered to the ON position to prevent loss of insufflation).

4. ***Continue procedure in accordance with instructions above*.**

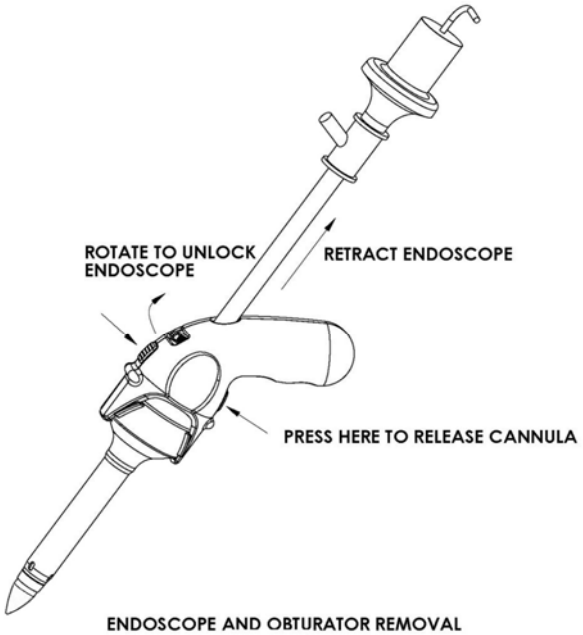

ENDOSCOPE AND OBTURATOR REMOVAL
FIGURE 7

General Instructions for Use of Blunt Tip Trocar for AirSeal® Mode:

1. Using sterile technique, remove instrument from package. To avoid damage, do not flip the instrument into the sterile field.
2. The Blunt Tip Trocar, Cannula and anchor device are packaged unassembled. Assemble the Blunt Tip Trocar by inserting the Blunt Obturator into the Cannula until they are seated securely together. Attach suture tie down anchor in the normal manner.
3. Create an incision using standard surgical procedures that allow the anchor device to be introduced.
4. Introduce the assembled Trocar, Cannula and suture tie down assembly through the abdominal incision.
5. Use sutures to secure the tie down anchor device to the patient's abdomen in the usual manner.
6. A single lumen, AirSeal® Veress Needle Adapter Tube extension is pre-attached to the tri-lumen, SmokEvac Filter Tube Set. Remove the single lumen extension as it will not be used for Blunt Tip (Hassan-type) abdominal entry.
7. Turn DPIS 2000 Unit Power ON.
8. At conclusion of initial self-check, select AirSeal® Mode from user menu.
9. Lever on DPIS 2000 Unit should be in UNLOCK position.
10. Insert filter housing of the AirSeal® SmokEvac Filter Tube Set into the front of DPIS 2000 Control Unit
11. Push lever down into LOCK position.
12. Set to desired flow and pressure value: default value is 5 L/m and 15 mm/Hg.
13. Ensure that the Blunt Tip Obturator and Cannula are properly assembled.

You are ready to insert the Blunt Tip Trocar and Cannula using appropriate laparoscopic (Hassan-style entry) technique.

14. Ensure that the Blunt Tip Trocar assembly is properly inserted.
15. Remove the blue manifold plug from the side of the AirSeal® Cannula housing and connect the distal end of the AirSeal® SmokEvac Filter Tube Set to the AirSeal® Cannula manifold and tighten.
16. Select Initial Insufflation and Push "Start" for initial insufflation to begin.
17. After initial insufflation is achieved, turn on AirSeal® Mode on DPIS 2000 Control Unit.
18. Set to desired flow and pressure value: default value is 5 L/m and 15 mm/Hg.
19. Remove AirSeal® Obturator from Trocar assembly.
20. Upon completion of the procedure, use standard laparoscopic technique and remove all surgical devices and then turn the DPIS 2000 Unit OFF. (**Note**: Switching DPIS 2000 Unit OFF will result in loss of pneumoperitoneum).
21. Remove the AirSeal® Cannula from the abdominal incision. Close incision in usual manner.
22. Move lock lever on the DPIS 2000 Unit to the up or UNLOCK position.
23. Remove the AirSeal® Filter Tube Set from the DPIS 2000 Unit.

General Instructions for Use in Smoke Evacuation Mode:

For use with two conventional trocars with standard Luer ports and AirSeal® Smoke Evacuation Bifurcated Tube Set.
Clear lumen: Pressure
Blue Lumen: Return

INITIAL INSUFFLATION WITH VERESS NEEDLE

1. Turn DPIS 2000 Unit Power ON.
2. At conclusion of diagnostic self-check, select Smoke Evacuation Mode from user menu.
3. Lever on DPIS 2000 Unit should be in UNLOCK position.
4. Insert filter housing of the AirSeal® Smoke Evacuation Tube Set into the DPIS 2000 Unit.
5. Push lever into LOCK position.
6. Set to desired flow and pressure value: Default value is 5 L/m and 15 mm/Hg; Smoke evacuation status will not appear.
7. Attach Veress needle to **CLEAR** Luer Lock on the Smoke Evacuation Tube Set.
8. Push Initial Insufflation "Start" and insufflation will begin.
9. After initial insufflation has been achieved **you are ready to insert the conventional commercially available Trocar and Cannula assembly with standard Luer ports.**
10. Ensure that the trocars and cannulas are properly inserted.
11. Remove Veress needle and disconnect from tube set.
12. Connect single lumen tube with CLEAR Luer Lock to desired trocar using standard laparoscopic techniques.
13. Connect single lumen tube with BLUE Luer Lock to second trocar. Insufflation remains active.
14. When single lumen tube with BLUE Luer Lock is connected to second trocar, Smoke Evacuation is activated.
15. Upon completion of the procedure, use standard laparoscopic technique and remove all Trocars
16. Close abdominal incisions in the usual manner.
17. Turn the DPIS 2000 Unit OFF. (Note: Switching DPIS 2000 Unit OFF will result in loss of pneumoperitoneum).
18. Move lever on the DPIS 2000 Unit to the up or UNLOCK position.
19. Remove the AirSeal® Smoke Evacuation Filter Tube Set.

General Instructions for Use in Standard Insufflation Mode:

For use with conventional Trocars with standard Luer ports and AirSeal® single lumen Standard Insufflation Tube.

INITIAL INSUFFLATION WITH VERESS NEEDLE

1. Turn DPIS 2000 Unit Power ON.
2. At conclusion of diagnostic self-check, select Standard Insufflation Mode from user menu.
3. Attach single lumen Standard Insufflation Tube to the DPIS 2000 Unit and connect Luer Lock end to Veress needle or conventional Trocar in the usual manner.
4. After initial insufflation has been achieved, **you are ready to insert the conventional commercially available Trocar and Cannula assembly with standard Luer ports.**
5. Set to desired flow and pressure value: Default value is 5 L/m and 15 mm/Hg.
6. Upon completion of the procedure, use standard laparoscopic technique and remove all Trocars
7. Close abdominal incisions in the usual manner.
8. Turn the DPIS 2000 Unit OFF. (Note: Switching DPIS 2000 Unit OFF will result in loss of pneumoperitoneum).
9. Remove the AirSeal® Standard Insufflation Tube.

WARNINGS AND PRECAUTIONS
FILTER TUBE ALARM CONDITIONS FOR BOTH AIRSEAL® SMOKEVAC AND AIRSEAL® SMOKE EVACUATION MODE.

1) The DPIS 2000 Unit alarm will sound if the cooling vents are blocked on the sides or the bottom of the control console. If the alarm sounds, check for any blockage of the cooling vents.
2) If the above conditions DO NOT exist and the alarm continues to sound, stop using the DPIS 2000 Unit and return to the manufacturer for servicing.

- **Note: Do not submerge the tip of the Cannula in irrigation or bodily fluids.**

GENERAL PRECAUTIONS
- Minimally invasive procedures should be performed only by persons having adequate training, familiarity and relevant competence with minimally invasive surgical techniques. Consult medical literature relative to techniques, complications, and hazards prior to performance of any minimally invasive procedure.
- The possibility of air entrainment exists under the following conditions:
  - Severe pressure applied externally to the abdomen
  - Severe and protracted leaking through other traditional ports in place or an open incision
  - Severe and prolonged suction
- During these conditions as described above, the displacement of the insufflator gas with air is temporary and the entrained air will be displaced by CO_2.
- A thorough understanding of the principles and techniques involved in laser, electrosurgical, and ultrasonic procedures is essential to avoid shock and burn hazards to both patient and medical personnel and damage to the device or other medical instruments. Ensure that electrical insulation or grounding is not compromised.
- The design features of the Bladeless, Optical Tip Trocar are intended to minimize the likelihood of penetration injury to intra-abdominal and intra-thoracic structures. However, the standard precautionary measures employed in all such insertions must be observed.
- Although the Optical Trocar has a "bladeless" tip, care must still be taken, as with all such devices, to avoid damage to major vessels and other anatomic structures (such as bowel or mesentery). To minimize the risk of such injury, be sure to:
  - Establish adequate pneumoperitoneum;
  - Properly position the patient to help displace organs out of the area of penetration;
  - Note important anatomical landmarks;
  - Direct Trocar tips away from major vessels and structures;
  - Do not use excessive or uncontrolled force.
  - Employ optical entry technique whenever possible.
- Once proper entry has been made laparoendoscopically, the Optical Tip Trocar should not be advanced for additional penetration. Continued entry of the Trocar at this point could cause injury to intra-abdominal or intra-thoracic structures.
- Once partial entry has been accomplished, very little pressure is required to complete entry. Excessive pressure may cause injury to intra-abdominal or intra-thoracic structures.
- After removing the Cannula from the cavity, always inspect the site for hemostasis. If hemostasis is not present, appropriate techniques should be used to achieve hemostasis.
- The filters of the AirSeal® Smoke Evacuation Tube Set and the AirSeal® SmokEvac Tube Set are designed to collect fluid if aspirated into the tubing from the Cannula. The filter housing of the AirSeal® Smoke Evacuation Tube Set and the AirSeal® SmokEvac Tube Set incorporates a MAX FLUID LEVEL line. DO NOT exceed this level. If fluid approaches this level discard and replace the tubing set.
- Instruments or devices which come into contact with bodily fluids may require special disposal handling to prevent biological contamination.

- All AirSeal® disposable devices are packaged and sterilized for single patient use only. Do not reuse, reprocess or resterilize. Reuse, reprocessing or resterilization may compromise the structural integrity of the device and/or lead to device failure which in turn may result in patient injury, illness or death. Also, reprocessing or resterilization of single use devices may create a risk of contamination and/or cause patient infection or cross-infection, including, but not limited to, the transmission of infectious disease(s) from one patient to another. Contamination of the devices may lead to injury, illness, or death of the patient.

HOW SUPPLIED
Each of the Optical Trocar, Blunt Tip Trocar, Cannula, AirSeal® SmokEvac Filter Tube Set, and AirSeal® Smoke Evacuation Filter Tube Set are supplied sterile for single patient use. Discard after use.

The AirSeal® DPIS 2000 Unit is non-sterile and reusable.

CAUTION: Federal Law (U.S.A.) restricts this device to sale by or on the order of a physician.

Legend/ Symbols:

Attachment 3

DPIS 2000 System

Manual EN

Handbuch DE

Manufacturer/Hersteller

SURGIQUEST
12 Cascade Blvd.
Suite 2B I Orange
CT 06477

CE marking according to Directive 93/42/EEC
CE-Kennzeichnung gemäß Richtlinie 93/42/EWG

Model: F121/120xxx/10000010595 00/1210/ama

EN

DE

	See operating manual	Achtung Begleitpapiere beachten
	Symbol for type BF equipment	Symbol für ein Gerät des Typs BF
	Symbol for potential equalization	Symbol für Potentialausgleich
IP 21	Degrees of protection provided by enclosures (IP-Code)	Gehäuseschutzklasse (IP-Code)
~	Alternating current	Wechselstrom
	Service	Service
REF	Order number	Bestellnummer
	Single use only	Nicht zur Wiederverwendung
STERILE EO	Sterile with ETO	Sterilisiert mit ETO
LOT	Lot no.	Chargenbezeichnung
SN	Serial number	Seriennummer
	Date of manufacture	Herstellungsdatum
	Expiration day	Verwendbar bis
Stück pieces	Pieces, quantity	Anzahl, Menge
	Increase	Zunehmend

	Decrease	Abnehmend
	Do not get wet	Vor Nässe schützen
	Top-Bottom	Oben-Unten
	Fragile	Zerbrechlich
	Waste management	Entsorgung
	Manufacturer	Hersteller
	Do not use if package damaged	Inhalt beschädigter Packung nicht verwenden
	Keep away from heat	Vor Hitze schützen
Rx ONLY	Authorized for Sale or use by Physician only	Nur für authorisiertes Vertriebspersonal oder Arzt
START	Start	Start
STOP	Stop	Stopp
HOME	Home	Home
MENU	Menu	Menü
	Information key	Info-Taste
<<<	Back to menu	Vorheriges Menü

Symbols/Bildzeichen

EN

DE

	House gas supply full	Hausgas voll	REF	Reference number	Referenz Nummer
	House gas supply low	Niedrige Hausgas-versorgung	STERILE R	Radiation steriliza-tion	Sterilisation durch Bestrahlung
	Gas bottle full	Flaschengas		Do not resterilize	Nicht erneut sterili-sieren
	Low supply gas bottle	Niedriger Gasdruck		On/Off	Ein/Aus
	Too low supply gas bottle	Gasdruck zu niedrig	RESET	Reset key	Reset-Taste
	Gas bottle empty	Gasdruck zu niedrig		Volume	Lautstärke

EN

Table of Contents

EN

EN

1 Important User Notes

Read the manual carefully and become familiar with the operation and function of the device and the accessories before use during surgical procedures. Non-observance of the instructions listed in this manual can lead

- to life-threatening injuries of the patient,
- to severe injuries of the surgical team, nursing staff or service personnel, or
- to damage or malfunction of device and/or accessories.

Subject to technical changes

The manufacturer reserves the right to modify the appearance, graphics, and technical data of the supplied product through continued product development.

Please note

The words DANGER, WARNING, and NOTE carry special meanings. Sections marked with these words must be read especially attentively.

DANGER!
The safety and/or health of the patient, user, or a third party are at risk. Comply with this warning to avoid injury to the patient, user, or third parties.

WARNING!
These paragraphs include information provided to the operator concerning the intended and proper use of the device or accessories.

NOTE!
Here you will read information about the maintenance of the device or the accessories.

EN

2 Safety Information

Federal Law (only for U.S. market)

U.S. federal law restricts use of this device to use by or on the order of a physician.

Exclusion of liability

The manufacturer is not liable for direct or consequential damage and the warranty is null and void if:

- the device and/or the accessories are improperly used, prepared, or maintained,
- the instructions and rules in the manual are not adhered to,
- non-authorized persons perform repairs, adjustments, or alterations on or to the device or accessories,
- non-authorized persons open the device,
- the prescribed inspection and maintenance schedules are not adhered to.

Receipt of technical documentation from the manufacturer does not authorize individuals to perform repairs, adjustments, or alterations on or to the device or accessories.

Authorized service technician

Only an authorized service technician may perform repairs, adjustments, or alterations on the device or accessories and use the service menu. Any violation will void the manufacturer's warranty. Authorized service technicians are only trained and certified by the manufacturer.

Intended use

The device may be used only as intended.

Care and maintenance

The service and maintenance of the device and its accessories has to be carried out as per instructions to ensure the safe operation of the device. For the protection of the patient and the operating team, check that the device is complete and functional before each use.

Contamination

Before shipping, decontaminate device and accessories in order to protect the service personnel. Follow the instructions listed in this manual. If this is not possible,

- the product must be clearly marked with a contamination warning and
- is to be double-sealed in safety foil.

The manufacturer has the right to reject contaminated products for repair.

Waste management

This symbol indicates that the waste of electrical and electronic equipment must not be disposed of as unsorted municipal waste and must be collected separately instead. Please contact the manufacturer or an accordingly authorized disposal or waste management company for further information.

2.1 Hazards

DANGER!
Condensation / Water penetration
Protect device from moisture. Do not use if moisture has penetrated the device.

DANGER!
Technique and procedures
Only the physician can evaluate the clinical factors involved with each patient and determine if the use of this device is indicated. The physician must determine the specific technique and procedure that will accomplish the desired clinical effect.

DANGER!
Check all factory settings.
Factory settings are not mandatory settings for the physician. The physician is responsible for all settings affecting the surgical procedure.

DANGER!
Original accessories
For your own safety and that of your patient, use only original accessories.

DANGER!
Not explosion-proof
The device is not explosion-proof. Do not use in an area where flammable anesthetic gases are present.

DANGER!
Risk of electrical shock
To prevent electrical shock, do not open this device. Never open this device yourself. Refer servicing to qualified service personnel.

DANGER!
Professional qualification
This manual does not include descriptions or instructions for surgical procedures/techniques. It is also not suitable for training physicians in the use of surgical techniques. Medical peripherals and devices may be used only by physicians or medical assistants with the appropriate technical/medical qualification working under the direction and supervision of a physician.

DANGER!
Function test
The function test must be performed prior to each surgery.

DANGER!
Sterile mediums and accessories
Always work exclusively with sterile substances and mediums, sterile fluids, and sterile accessories if so indicated.

DANGER!
Replacement device and accessories
In case the device or any of the accessories fail during surgery, a replacement device and replacement accessories should be kept within easy reach to be able to finish the operation with the replacement components.

DANGER!
Cleaning the device
Do not sterilize the device.

EN

DANGER!
Replacing fuse
Replace the fuse only with a fuse of the same type and rating.

DANGER!
Device-inherent dangers
Read the warnings specific to this device in chapter 3.1 "Device-inherent Dangers".

WARNING!
To avoid the risk of electrical shock, only use this device when connected to a properly grounded power supply network.

WARNING!
Endoscope
The device may only be connected with endoscopes designed for and featuring the technical specification permitting such a combined use. Any utilized endoscopes must comply with the most recent versions of EC 60601-2-18 and ISO 8600.

PHT
DEHP

DANGER!
Disposable tube sets contain Diethylhexylphthalate (DEHP), which is classified as toxic to reproduction according to the EU Directive 67/548/EEC on Classification and Labelling of Dangerous Substances. DEHP may impair fertility, may cause harm to unborn child, may execrate in breast milk. Therefore, this product must not be used for unauthorized applications. When applied within the intended use, the potential risk to pregnant or breastfeeding women as well as to children resulting from the DEHP contained in this product is not critical. In regard to the short exposure time and the physical characteristics the eventuality of critical quantities of DEHP being dissolved from the tube sets is neglectable.

DANGER!
Reprocessing of sterile disposable products
Infection hazard for patients and/or users and impairment of product functionality due to reuse. Risk of injury, illness or death due to contamination and/or impaired functionality of the product! Do not reprocess the product.

EN

3 Device Purpose

Intended use

The DPIS 2000 System is intended for use in diagnostic and/or therapeutic endoscopic procedures to distend a cavity by filling it with gas, to establish and maintain a path of entry for endoscopic instruments and to evacuate surgical smoke. It is indicated to facilitate the use of various laparoscopic instruments by filling the peritoneal cavity with gas to distend it, by creating and maintaining a gas sealed obstruction-free instrument path and by evacuating surgical smoke. The trocar of the DPIS 2000 System is indicated for use with visualization (Optical Trocar) or without (Blunt Tip Trocar).

Contraindications

The device may not be used to fill an abdomen with CO_2 if a laparoscopy is contraindicated. Please consult the manual of your laparoscope for absolute and relative contraindications. The device is not suitable for hysteroscopic insufflation procedures, i.e., it may not be used to distend the uterus.

3.1 Device-inherent Dangers

DANGER!
Positioning the patient
Always position the patient lower than the device to prevent body fluids from leaking into the insufflation tube. Actual pressure may increase and fluid may penetrate the insufflation tube if the patient is repositioned during surgery. If this occurs, immediately disconnect the insufflation tube. When the patient is repositioned onto his or her side, internal tissue may block the insufflation channel. Always insufflate through the elevated side of the patient.

DANGER!
Removing the insufflation tube
Always disconnect the insufflation tube after ending surgery and before switching off the device to prevent backflow of bodily fluids. Fluid may penetrate the insufflation tube whenever you change the gas bottle and/or when you stop the gas flow during the operation. If this happens, you must immediately disconnect the insufflation tube from the trocar or from the device.

DANGER!
Backflow
Body secretions or contaminated gas may backflow into the device through the insufflation tube if
- **a filter is not used,**
- **the actual pressure is higher than the nominal pressure or**
- **the automatic venting valve is activated.**

DANGER!
Gas flow
A high gas flow can occur due to large leaks within the surgical system or instrument. This can result in a false actual pressure reading, which in turn may endanger the patient. In case of a disrupted gas flow, you should therefore inspect device, tube, and instruments immediately. Surgical applications should be carried out with a gas flow of 4-10 l/min. An even lower gas flow is recommended for diagnostic purposes. It is recommended to perform endoscopies with the lowest gas flow possible.

EN

DANGER!
Keep filled CO_2 bottle on hand
Always keep a filled CO_2 bottle on hand ready for replacement. This avoids having to interrupt surgery due to a lack of insufflation gas.

DANGER!
Contamination
Do not use device and/or accessories if signs of contamination are detected. Make sure the device or/and accessories can no longer be operated until a qualified service technician conducts the appropriate tests and repairs.

DANGER!
Fatigue symptoms
When there is a high level of CO_2 consumption, you should make sure to supply the operating area with enough fresh air, since an increasing CO_2 level in the air can cause the medical personnel to suffer fatigue symptoms, an inability to concentrate, unconsciousness, or even death.

DANGER!
The venting rate of the automatic venting system is limited. Always monitor the actual pressure when using additional insufflation sources.

DANGER!
Contaminated filter
Replace a contaminated filter immediately during surgery to ensure unhindered gas flow.

DANGER!
Connecting the tube
Always use the proper tube set for the device. The tube outlet may only be connected to instruments which are intended for intra-abdominal CO_2-insufflation.

DANGER!
Electronic device control
Do not close the valve at the trocar sleeve during surgery. The electronic control unit of the device adjusts the actual pressure as desired.

DANGER!
Medically pure CO_2
Make sure to use only medically pure CO_2. Other gases (i.e., helium, N_2O, argon), mixtures of gases, high pressure compressed gases, gases with entrapped liquids, or polluted gases must not be used with this device.

DANGER!
Service connection
Connected devices have to comply with the EN 60950 standard. Do not connect a device to the service connection during surgery.

WARNING!
Electrical Interference
(See chapter 11 "Electromagnetic Compatibility"). Electrical interference with other devices or instruments was practically eliminated when developing this devices and none was detected during testing. However, if you still detect or suspect such interference, please follow these suggestions:

- **Move this, the other or both devices to a different location**
- **Increase distance between used devices**
- **Consult an electro-medical expert**

DANGER!
Peripheral devices
Additional peripheral equipment connected to interfaces of the medical monitor has to meet the requirements of the following specifications: IEC 60601-2-18 / EN 60601-2-18 for endoscopic devices and IEC 60601-1 / EN 60601-1 for electrical medical devices. All configurations have to comply with IEC 60601-1 / EN 60601-1 specifications. Whoever connects additional equipment to signal output or signal input is considered the system configurator and as such is responsible for complying with requirements of the standard IEC 60601-1 / EN 60601-1.

DANGER!
Idiosyncratic reactions
Patients with sickle cell anemia or pulmonary insufficiency may have a higher risk of metabolic imbalance related to excessive CO_2 absorption (idiosyncratic reaction).

DANGER!
CO_2 absorption
CO_2 is absorbed during insufflation (intravasation). This means the body absorbs part of the CO_2 gas used for insufflation. CO_2 concentrations in the blood or respiratory system that are too high can lead to death of the patient in extreme cases. To lower this risk, always carefully and closely monitor the patient's vital signs during the entire insufflation process and make sure patient is breathing well. Sufficient respiration can help avoid or limit problems with CO_2. High pressure or a high gas flow promotes CO_2 absorption. The abdomen is sufficiently distended using a pressure between 10 to 15 mm Hg. Pressure values above 15 mm Hg are required for only a few cases but do increase the risk of intravasation. Never exceed the max. intra-abdominal pressure of 30 mm Hg.

DANGER!
Metabolic and cardiac reactions
Insufflating CO_2 may result in metabolic acidosis. This can lead to cardiac irregularities expressed with the following symptoms:

- **Reduced respiration with restricted diaphram function**
- **Hypercapnia**
- **Reduction of venous reflux**
- **Reduced cardiac output**
- **Metabolic acidosis**

DANGER!
Hypothermia/monitoring body temperature
The gas flow can lead to a lowering of the patient's body temperature during insufflation. Hypothermia during insufflation can cause heart and cardiovascular

EN

problems. The risk for hypothermia can be significantly reduced with the use of gas that is pre-warmed to body temperature. Always monitor the patient's body temperature during the entire insufflation. Make especially sure that the following, hypothermia promoting, surgical conditions are avoided as best as possible:

- **High gas flow due to large leaks**
- **Long surgeries**
- **Use of cold (not preheated) irrigation and infusion solutions**

DANGER!
Dehydration
Insufflation can lead to dehydration of the tissue. This can result in organ tissue damage and cardiovascular reactions of the patient. Long surgeries and large leaks increase the risk of dehydration (especially at the insertion points of the trocars or when changing instruments).

DANGER!
Embolism
Improper placement of the insufflation instrument could cause insufflation of gas into a vessel, resulting in air or CO_2 embolisms. To reduce the risk of air or CO_2 embolism, perform initial insufflation at a low flow rate and ensure that the insufflation instrument is correctly positioned. Check the position of the insufflation instrument immediately if the actual pressure rapidly reaches the nominal pressure value. CO_2 embolisms can also be caused by a high intra-abdominal pressure. Avoid high-pressure settings and close damaged blood vessels at once.

DANGER!
Additional insufflation sources
The use of additional insufflation sources increases the intra-abdominal pressure. Continuously monitor intra-abdominal pressure over the course of the entire insufflation if additional sources are used.

EN

4 Initial Device Startup

Delivery inspection

Always check all parts and accessories of the device immediately after receiving the shipment. The manufacturer considers only replacement claims that have been immediately submitted or reported to a sales representative or an authorized service company.

Setting up the device

Place the device on a level surface and install in a dry environment. The ambient temperature and humidity must meet the requirements mentioned in chapter13 "Technical Data", page 45.

DANGER!
Not explosion-proof
The device is not explosion-proof. Do not use in an area where flammable anesthetic gases are present.

Mains connection

WARNING!
Check to make sure the available mains voltage matches the data listed on the type label attached to the back of the device. Incorrect voltage can cause errors and malfunctions and may destroy the device.

Make sure the connection data and technical specifications of the power supply comply with DIN VDE or national requirements. The mains power supply cable must be plugged into a properly installed safety wall plug (see DIN VDE 0107). Read the device label located in rear of device (type plate) to determine the operating voltage of the device.

Grounding contact

The power connection must be equipped with a grounding contact. Use the original power cable (if included in scope of delivery) to establish a connection between the mains wall socket and the non-heating device plug located in the rear of the device.

Only for U.S. operators

Only use a certified (UL-listed), removable mains connection line, type SJT, minimal 18 AWG, 3 leads. The plug connectors must comply with NEMA 5-15 or IEC 320/CEE22. Grounding will only be reliable if the equipment is connected to a corresponding hospital grade socket.

Potential equalization

Integrate the device into the potential equalization system as specified by local safety rules and regulations.

4.1 Gas Connection

DANGER!
Medically pure CO_2
Make sure to use only medically pure CO_2. Other gases (i.e., helium, N_2O, argon), mixtures of gases, high pressure compressed gases, gases with entrapped liquids, or polluted gases must not be used with this device.

Use a high-pressure tube to connect a CO_2 gas cylinder to the rear gas inlet connection or connect to centralized CO_2 gas supply.

EN

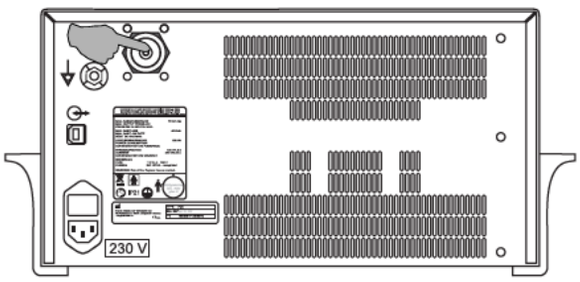

4.1.1 Connecting a Gas Bottle

WARNING!
Always use a high-pressure tube to connect gas bottle and device.

The gas bottle must be in a vertical position. The gas bottle pressure may not exceed 80 bar or be less than 15 bar.

WARNING!
Gas bottles with riser pipe can release dirt and oily fluids into the device. Do not use a gas bottles with riser pipe.

4.1.2 Connecting to Central Gas Supply

Use the following device connectors and high-pressure tubes available as additional equipment to connect to a central gas supply (house supply):

- XXXXXXXXX for house gas supply NIST or
- YYYYYYYYYY for house gas supply DISS

See 14 "Accessories (TBD)", page 47.

1. Attach the high-pressure tube to the gas connection.
2. Fasten the high-pressure tube with the nut.
3. Tighten the nut.

The device detects the type of gas supply.

4.1.3 Gas Consumption Display

The gas consumption display indicates the insufflated volume of CO_2 in liters since the last resetting of the display. The display depicts values between 0 and 999 liters.

The gas consumption display can be reset by pressing the **RESET** key and then returns to **0**.

Gas supply displays

The status of the gas supply is monitored by the device and indicated with symbols and acoustic signals.

EN

The following gas bottle pressures are displayed:

Gas supply with gas bottle

> 50 bar

40 - 50 bar

30 - 40 bar

0 -30 bar

The following house gas supply pressures are displayed:

House gas supply

House gas supply pressure OK

House gas supply pressure too low

EN

5 Operating the Device

5.1 Front of the Device

Familiarize yourself with the control and function elements at the front of the device.

Fig. 5-1 Device front

① ON/OFF switch

② Touch screen display

③ Receptacle for AirSeal and Smoke Evacuation mode

④ Lever for locking tube set in place

⑤ Insufflation tube connection for Standard Insufflation Mode (Christmas tree connection)

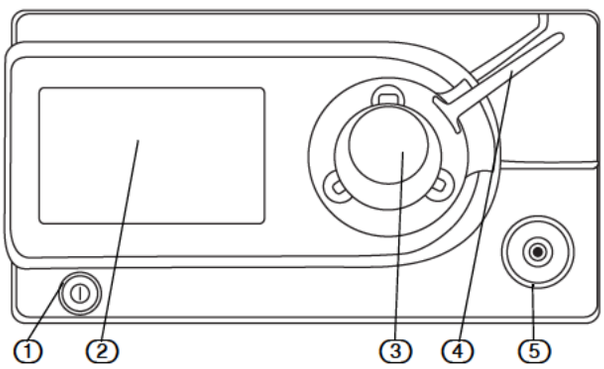

5.2 Rear of the Device

Familiarize yourself with the connection elements at the rear of the device.

Fig. 5-2 Device rear

⑥ Type plate

⑦ Device data plate

⑧ USB port

⑨ Connection for potential equalization

⑩ Gas connection

⑪ Ventilation slots (air outlet)

⑫ Device connector plug with fuse holder

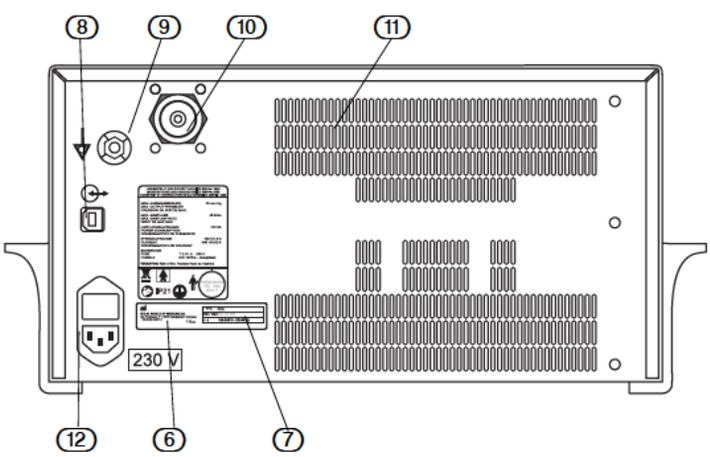

5.3 Bottom of the Device

Fig. 5-3 Bottom of the device

⑬ Ventilation slots (air intake)

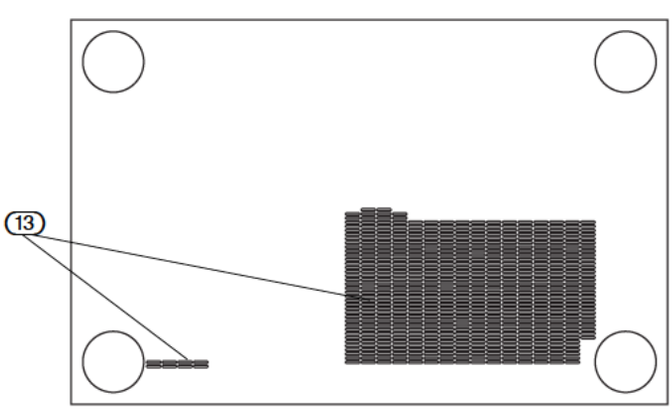

DANGER!

The device is equipped with a powerful ventilation system with air intake located at the bottom of the device. The suction can be so strong that is can trap sheets of paper or soiling if they come in proximity. Keep ventilation slots free of

EN

obstructions or soiling to ensure optimal cooling of the device.

5.4 Display

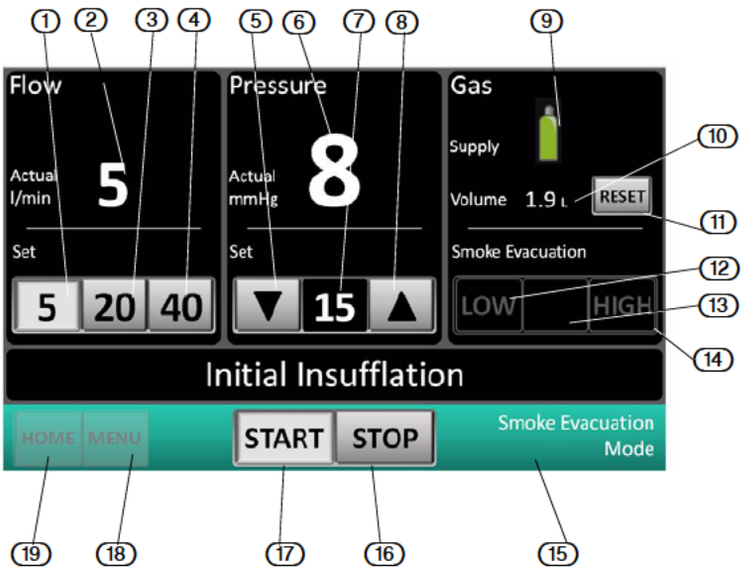

Fig. 5-4 Display

1. Nominal gas flow rate level 1
2. Actual flow rate display
3. Nominal gas flow rate level 2
4. Nominal gas flow rate level 3
5. Decreasing nominal pressure
6. Actual pressure display
7. Nominal pressure display
8. Increasing nominal pressure
9. Gas consumption display
10. Gas supply display
11. Reset key for consumption display
12. Smoke gas evacuation level LOW
13. Smoke gas evacuation status
14. Smoke gas evacuation level HIGH
15. Status display/error and warning messages
16. STOP key
17. START key
18. MENU key
19. HOME key

The above depicted display shows all displays and keys. Additional explanations for individual elements are presented in the subsequent respective control element descriptions.

Not all displays and functions are available for all modes.

5.5 Switching Device On

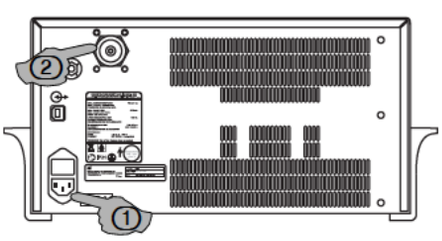

1. Plug the device into the power outlet.
2. Connect the gas supply to the gas connection port and open the gas supply.
3. Make sure **no** tube set is connected before switching the device on.
4. Press the ON/OFF switch (see Fig. 5-1 "Device front"①). The device now initializes and then runs the initial self-check. The start screen and a progress bar are depicted on the display during the initial self-check.

   If the initial self-check was unsuccessful, an error message and information about how to possibly remedy the problem are displayed. An acoustic warning signal is emitted (see 12 "Error and Warning Messages", page 42).

5. The message **Device Ready** is shown after the successful initial self-check. An acoustic signal is emitted and the display depicts **Mode Selection**.

NOTE!
After the successful initial self-check, factory-new devices will request the user select a language. Press the desired language.

6. If a tube set is connected before the device is switched on, the screen depicts

EN

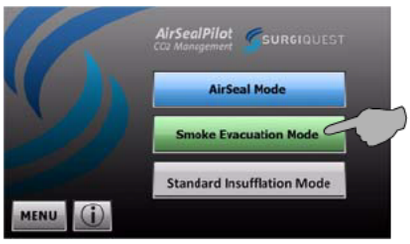

the following message: **Remove tube set**.
If the gas supply is insufficient, the message **Check gas supply** is depicted.

7. Press the respective key to choose the desired operating mode (e.g. **Smoke Evacuation Mode**).

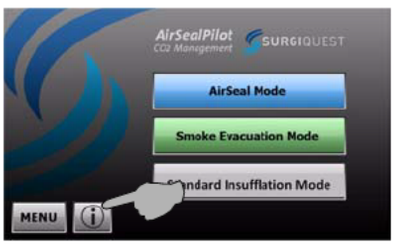

Press the **Information** symbol for a short instruction about the desired operating mode. Tutorials for the three insufflation operating modes are available.

Press the **MENU** key to return to **Mode Selection**.

5.5.1 Selecting Operating Mode

Press the corresponding key in **Mode Selection** to select the desired operating mode.

The device can be used with three different insufflation operating modes:

1. **Standard Insufflation Mode:** Traditional insufflation with a conventional single-lumen tube and trocar.
2. **Smoke Evacuation Mode:** Traditional insufflation and smoke evacuation with a double-lumen bifurcated tube for two conventional trocars.
3. **AirSeal Mode:** Insufflation with AirSeal® trocar.

5.5.2 Insufflation Tube Sets

Please use different accessories when working in the respective modes.

A conventional tube for **Standard Insufflation Mode** can be connected to the front of the device (see Fig. 5-1 "Device front", page 14, (5)). The tube sets for the operating modes **Smoke Evacuation** and **AirSeal** are connected to the filter connection (see Fig. 5-1 "Device front", page 14, (3)).

SurgiQuest Standard Insufflation Tube Set (hereafter referred to as Standard Insufflation Tube Set)	• Disposable conventional single lumen tube with standard insufflation filter
SurgiQuest Smoke Evacuation FilterTube Set (hereafter referred to as Smoke Evacuation Tube Set)	Disposable insufflation tube set with filter • Double-lumen bifurcated tube, transparent tube for insufflation, blue tube for smoke gas evacuation
SurgiQuest AirSeal® Filter Tube Set (hereafter referred to as AirSeal®Tube Set)	Disposable insufflation tube set with filter for use with: • Triple-lumen tube only for use with AirSeal® trocar
SurgiQuest Veress Needle Adapter Tube Extension (hereafter referred to as Veress Needle Tube Extension)	AirSeal-Luer-Lock adapter • Short section of tube for use with a Veress needle or traditional trocar with the AirSeal® tube set

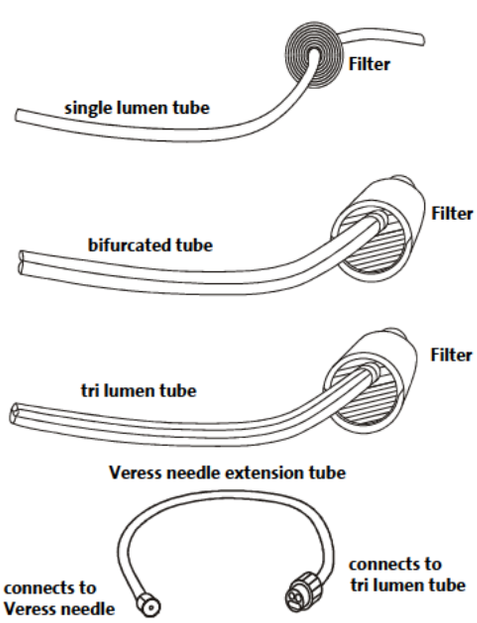

EN

SurgiQuest AirSeal® Bladeless Optical Tip Trocar (hereafter referred to as Optical Trocar)

SurgiQuest AirSeal® Blunt Tip Trocar (hereafter referred to as Blunt Tip Trocar)

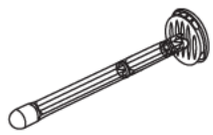

SurgiQuest AirSeal® Cannula (hereafter referred to as AirSeal® Cannula)

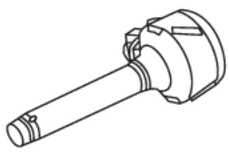

After pressing the operating mode key, an informational window opens for the required tube (only for **AirSeal** and **Smoke Evacuation Mode)**. Insert the tube set by positioning the filter cannister into the DPIS 2000 Unit and pulling down the lever (**AirSeal and Smoke Evacuation Mode)** or by pushing the open side of the tube set over the Christmas tree connector **(Standard Insufflation Mode)**.

5.5.3 Starting/Stopping Insufflation

Start insufflation:

Press **START** to start insufflation.

Activated insufflation:

The status line depicts **Initial Insufflation.** The **Initial Insufflation** phase remains in operation until the set nominal pressure has been reached through the insufflation for the first time.

WARNING!
For the safety of the patient please fill the tbe set with CO2 gas prior to beginning the insufflation by activating the insufflation for a few seconds and then turning it off again before introducing the insufflation instrument to the abdomen and beginning the surgery.

Stop insufflation:

Press **STOP** to stop insufflation.

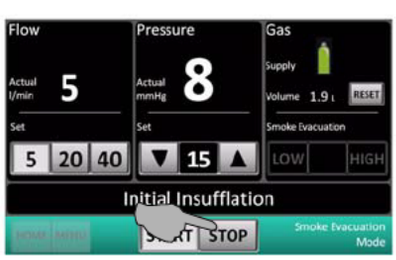

5.5.4 Switching Device Off

Use the ON/OFF switch to turn the device off.

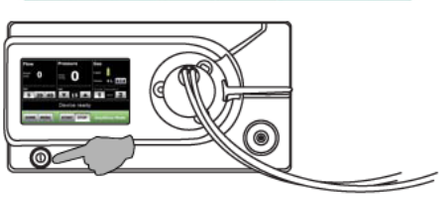

EN

6 Using and Controlling the DPIS 2000 System in its Different Modes

The device can be used with three different insufflation operating modes (see 5.5.2 "Insufflation Tube Sets"):

1. **Standard Insufflation Mode:** Traditional insufflation with a single-lumen conventional tube and trocar.
2. **Smoke Evacuation Mode:** Traditional insufflation and smoke gas evacuation with a double-lumen bifurcated tube for two conventional trocars.
3. **AirSeal Mode:** Insufflation with AirSeal® trocar.

6.1 Standard Insufflation Mode

The **Standard Insufflation Mode** is intended for use with a standard insufflation tube set and standard trocars.

1. Switch device on (consult section 5.5 "Switching Device On", page 15 for additional information).
2. Press the **Standard Insufflation Mode** key to select this operating mode.
3. Insert the standard insufflation tube set.

Inserting the standard insufflation tube set

To be carried out by non-sterile technician:

- Open packaging of the standard insufflation tube set.
- Have a sterile technician remove the tube set from the inside of the package.

To be carried out by sterile technician:

- Keep the distal tube Luer lock connector in the sterile area and hand the proximal tube end with filter to the non-sterile technician.
- Connect the Luer lock connector with the instrument (e.g. inflow cannula). Open inflow valve at instrument.

To be carried out by non-sterile technician:

- Insert the insufflation tube set into the insufflation tube set connection at the front of the device (Christmas tree connector).

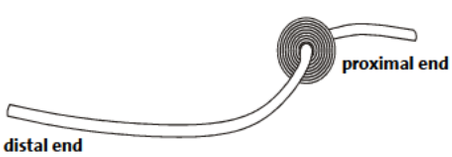

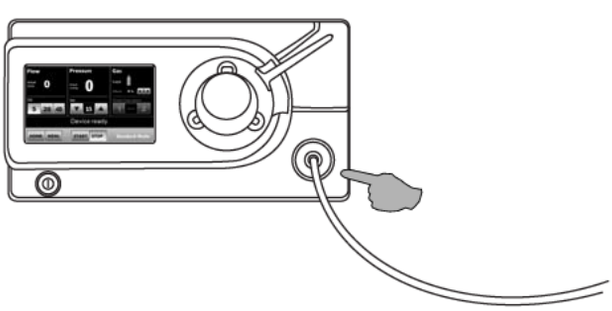

4. Choose desired settings

Setting the nominal flow and nominal pressure (increase/decrease) is possible during insufflation or while insufflation is stopped.

Setting the nominal flow:

The device features three different flow level rates that can be adjusted in the user menu (see chapter 8 "User Menu" for additional information):

Level 1 -> 5 l/min

Level 2 -> 20 l/min

Level 3 -> 40 l/min

- To set the flow rate, press the key ①, ③ or ④.

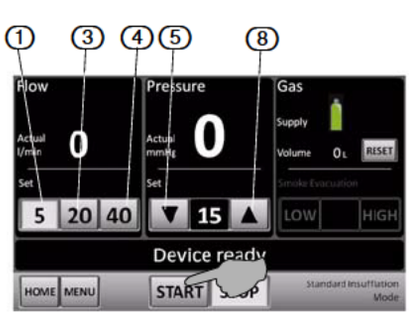

Setting the nominal pressure:

Press the key ▼ or ▲ (⑤ or ⑧) to set the nominal pressure. Values may range from **5 to max. 20 mmHg** and can be adjusted in increments of 1. The starting value for the pressure can be set in the user menu within a range of

EN

5 - 15 mmHg.

- Scrolling is enabled by keeping the ▼ or ▲ key depressed longer than 1.5 seconds.

Safety limit:

When wanting to **Increase** the nominal pressure to > 15 mmHg, the status line depicts the message **Safety Limit**. This is where the recommended range for the intra-abdominal pressure ends. Pressing the nominal pressure key ▲ again does not increase the pressure any further. Release the key for 2 seconds. Then a value up to 20 mmHg can be set.

WARNING!
Exceeding this safety limit is to be decided by and the responsibility of the user/ operator.

5. Start insufflation by pressing the **START** key.

The status line depicts **Initial Insufflation.** The **Initial Insufflation** ends when the nominal pressure value has been reached for the first time. After the **Initial Insufflation**, the flow rate automatically increases to the nominal gas flow specified for level 3. The status line depicts **Insufflating.**

NOTE!
For the safety of the patient, it is advised to start insufflation with a Veress cannula and at the lowest flow rate (level 1, key ①). Exchange the Veress cannula against a conventional trocar once the nominal pressure is reached and the initial insufflation phase ends.

WARNING!
Always use standard insufflation tube set with filter (see 5.5.2 "Insufflation Tube Sets").

DANGER!
Positioning the patient
Always position the patient lower than the device to prevent body fluids from leaking into the insufflation tube. Actual pressure may increase and fluid may penetrate the insufflation tube if the patient is repositioned during surgery. If this occurs, immediately disconnect the insufflation tube. When the patient is repositioned onto his or her side, internal tissue may block the insufflation channel. Always insufflate through the elevated side of the patient.

DANGER!
Backflow
Body secretions or contaminated gas may backflow into the device through the insufflation tube if

- **a filter is not used,**
- **the actual pressure is higher than the nominal pressure or**
- **the automatic venting valve is activated.**

6. Stop insufflation by pressing the **STOP** key.

When working in the **Standard Insufflation Mode**, it is advised to work with an activated venting valve that will automatically release CO_2 gas in case of an overpressure situation. The default mode of the venting valve is **ON.**

EN

6.2 Smoke Evacuation Mode

The **Smoke Evacuation Mode** is intended for standard insufflation under simultaneous evacuation of smoke from the abdomen as it may occur during the use of standard ultrasonic, laser and electric energy devices. Use the two-lumen Smoke Evacuation tube set such as two standard trocars when working in this mode. The **Smoke Evacuation Mode** is automatically activated with an abdominal pressure of over 5 mmHg and a CO_2 concentration in the abdomen over 80% if the second trocar is inserted into the abdomen and attached to the evacuation line of the bifurcated tube (blue-colored tube with blue Luer lock).

1. Switch device on.
   If a Smoke Evacuation tube set or an AirSeal® tube set with tri lumen tube is already inserted at the moment when the device is activated, it will be recognized after the initial self-check of the device and the display depicts the message **Remove tube set.** Remove the tube set from the DPIS 2000 Unit.
2. Press the **Smoke Evacuation Mode** key.

3. Insert the Smoke Evacuation tube set with bifurcated tube.

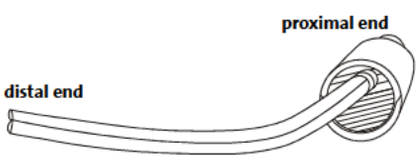

Inserting the Smoke Evacuation tube set

To be carried out by non-sterile technician:

- Open packaging of the Smoke Evacuation tube set.
- Have a sterile technician to remove the tube set from the inside of the package.

To be carried out by sterile technician:

- Keep the luer lock connectors of the distal bifurcated tube in the sterile area and hand the proximal tube end connected to the filter to the non-sterile technician.
- Connect the clear Luer lock connector of the bifurcated tube with the conventional trocar. Open the inflow valve.
- If additional trocars are to be attached, connect the blue Luer lock connector of the bifurcated tube to a different conventional trocar.

To be carried out by non-sterile technician:

- Insert the Smoke Evacuation filter housing into the receptacle at the front of the device. Use the lever to lock the filter housing in place or to unlock and release it.

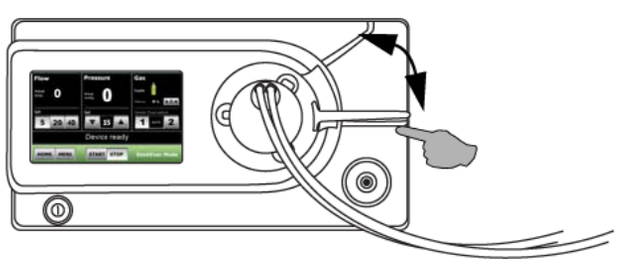

NOTE!
If the inserted tube set does not match the selected mode, a corresponding text is displayed (Automatic Tube Detection). Exchange the tube set or choose the corresponding mode to the tube set.

NOTE!
If a Smoke Evacuation or AirSeal® tube set is inserted into the device before the desired mode key is pressed, the respective surgery mode corresponding to the set opens at once.

EN

4. Choose desired settings

   Setting the nominal flow and nominal pressure (increase/decrease) is possible during insufflation or while insufflation is stopped.

   Setting the nominal flow:

   The device features three different flow level rates that can be adjusted in the user menu (see chapter 8 "User Menu" for additional information):

   Level 1 -> 5 l/min

   Level 2 -> 20 l/min

   Level 3 -> 40 l/min

   - To set the flow rate, press the key ①, ③ or ④.

   Setting the nominal pressure:

   Press the key ▼ or ▲ (⑤ or ⑧) to set the nominal pressure. Values may range from **5 to max. 20 mmHg** and can be adjusted in increments of 1. The starting value for the pressure can be set in the user menu within a range of 5 - 15 mmHg.

   - Scrolling is enabled by keeping the ▼ or ▲ key depressed longer than 1.5 seconds.

   Safety limit:

   When wanting to **Increase** the nominal pressure to > 15 mmHg, the status line depicts the message **Safety Limit**. This is where the recommended range for the intra-abdominal pressure ends. Pressing the nominal pressure key ▲ again does not increase the pressure any further. Release the key for 2 seconds. Then a value up to 20 mmHg can be set.

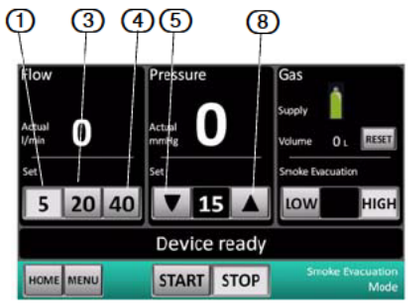

WARNING!

Exceeding this safety limit is to be decided by and the responsibility of the user/ operator.

5. Start insufflation by pressing the **START** key.

   The status line depicts **Initial Insufflation.** The **Initial Insufflation** ends when the nominal pressure value has been reached for the first time. After the **Initial Insufflation**, the flow rate automatically increases to the nominal gas flow specified for level 3. The status line depicts **Insufflating-Connect blue Smoke Evacuation tube.**

   To enable smoke gas evacuation, connect the blue Luer lock of the Smoke Evacuation bifurcated tube to a second conventional trocar. The smoke gas evacuation can now be set to **Level LOW** (evacuation of approx. 4 l/min.) or **Level HIGH** (evacuation of approx. 8 l/min.) (⑫ or ⑭).

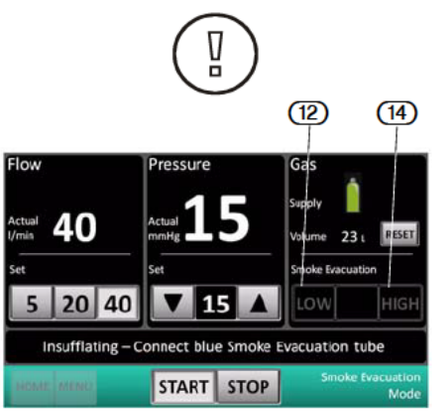

NOTE!

For the safety of the patient, it is advised to start insufflation with a Veress cannula and at the lowest flow rate (level 1, key ①). Exchange the Veress cannula against a conventional trocar once the nominal pressure is reached and the initial insufflation phase ends.

6. Stop insufflation by pressing the **STOP** key.

When working in the **Smoke Evacuation Mode**, it is possible that body fluids are extracted from the surgical field over the evacuation line. In order to prevent contamination of the device, these are retained by the fluid trap of the Smoke Evacuation tube set filter component. The capacity of the fluid trap is limited. A warning message will be emitted if the capacity of the fluid trap is reached to 75%. If the fluid trap is full, the Smoke Evacuation function will stop and the message **Filter contaminated! Smoke Evacuation function stopped! Change tube set to continue Smoke Evacuation** will be depicted.

EN

6.3 AirSeal Mode

The **AirSeal Mode** is intended to establish and maintain a pathway of entry for laparoendoscopic intruments to the field of surgery within laparoscopic procedures. The abdominal pressure is maintained by an air cushion within the Cannula System that allows barrier-free access to the body cavity and that does not collapse when introducing instruments.

DANGER!
Please read the respective instruction manual before using the AirSeal® trocar.

6.3.1 AirSeal® Optical Obturator and Cannula System

Fig. 6-1 AirSeal® System

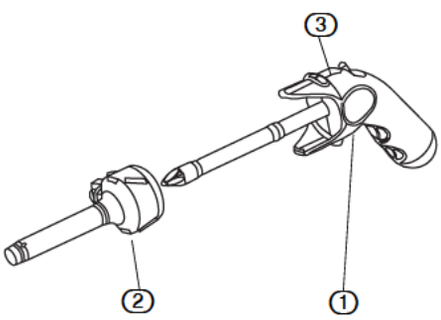

The AirSeal® Optical Obturator and Cannula System is packaged in three configurations:

- Optical obturator
- Non-blade obturator
- Blunt obturator with suture anchor

The AirSeal® Optical Obturator and Cannula System is composed of a sterile single patient use instrument consisting of an obturator ① and the cannula ② (see Fig. 6-1 "AirSeal® System"). The obturator may be used with or without visualization for primary and secondary insertions.

If the Optical Trocar is being used for primary entry, use of a laparoscope to provide visualization to enhance safe abdominal entry is advised.

1. Use sterile techniques to remove the instrument from the package.
2. The obturator ① and the cannula ② (see Fig. 6.1) are packaged unassembled. Assemble the obturator by inserting the obturator into the cannula until they lock securely together.
3. **When using optical obturator**
   - Connect the 0° endoscope to the light supply and monitor (see manufacturer's instructions).
   - Insert the endoscope into the opening at the proximal end of the obturator until it reaches the distal tip of the obturator. Secure the endoscope in the obturator using the scope lock ③ (see Fig. 6.1).

6.3.2 Initial Insufflation

When working in the **AirSeal Mode**, it is possible to initiate insufflation either over the open cannula, over the cannula with inserted obturator or over a Veress needle.

WARNING!
The manufacturer strongly advises to begin the insufflation by using the Veress needle.

This option is covered in the following passage.

Initial insufflation with Veress needle optical entry

1. Switch device on (consult section 5.5 "Switching Device On", page 15 for additional information).
2. At the conclusion of the initial self-check, press the **AirSeal Mode** key to select

this operating mode.

3. Insert the AirSeal® tube set.

Inserting the AirSeal® tube set

To be carried out by non-sterile technician:

- Open packaging of the AirSeal® tube set.
- Have a sterile technician to remove the tube set from the inside of the package.

To be carried out by sterile technician:

- Keep the triple-lumen AirSeal® trocar connector in the sterile area and hand the tube end with filter to the non-sterile technician.

  Option a) Initial insufflation with Veress cannula or conventional trocar (advised)

  Use the AirSeal-Luer-Lock adapter to connect the triple-lumen AirSeal® tube with the Luer lock connector of a conventional Veress cannula or a conventional trocar (see 5.5.2 "Insufflation Tube Sets"). The Veress adapter comes connected to the AirSeal® tube set upon delivery.

  Option b) Initial insufflation with AirSeal® trocar

  Connect the triple-lumen AirSeal® trocar connector with the AirSeal® trocar (see 6.3.1 "AirSeal® Optical Obturator and Cannula System").

To be carried out by non-sterile technician:

- Insert the insufflation tube set into the insufflation tube set connection at the front of the device. Use the lever to lock the insufflation tube set in place or to release it.

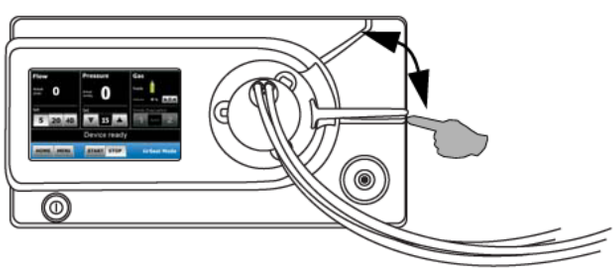

NOTE!

If the inserted tube set does not match the selected mode, a corresponding text is displayed (Automatic Tube Detection). Exchange the tube set or choose the corresponding mode to the tube set.

NOTE!

If a Smoke Evacuation or AirSeal® tube set is inserted into the device before the desired mode key is pressed, the respective surgery mode corresponding to the set opens at once.

4. Continued initial insufflation with Veress needle.
5. Connect the Veress needle single-lumen tube to the distal end of the Veress needle adapter (AirSeal-Luer-Lock adapter) and insert in accordance with proper laparoscopic technique.
6. Ensure that the obturator and cannula are properly inserted.
7. Choose desired settings

   Setting the nominal flow and nominal pressure (increase/decrease) is possible during insufflation or while insufflation is stopped.

   Setting the nominal flow:

   The device features three different flow level rates that can be adjusted in the

EN

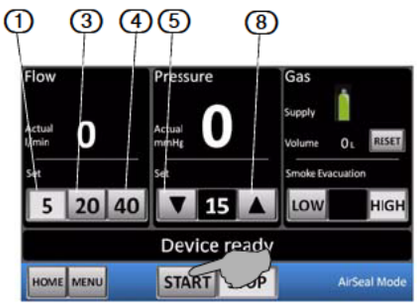

user menu:

Level 1 -> 5 l/min

Level 2 -> 20 l/min

Level 3 -> 40 l/min

- To set the flow rate, press the key ①, ③ or ④.

Setting the nominal pressure:

Press the key ▼ or ▲ (⑤ or ⑧) to set the nominal pressure. Values may range from **5 to max. 20 mmHg** and can be adjusted in increments of 1. The starting value for the pressure can be set in the user menu within a range of 5 - 15 mmHg.

- Scrolling is enabled by keeping the ▼ or ▲ key depressed longer than 1.5 seconds.

Safety limit:

Increase the nominal pressure to > 15 mmHg, status line depicts the message **Safety Limit**. This is where the recommended range for the intra-abdominal pressure ends. Pressing the nominal pressure key ▲ again does not increase the pressure any further. Release the key for 2 seconds. Now you can set a value up to 20 mmHg.

WARNING!

Exceeding this safety limit is to be decided by and the responsibility of the user/ operator.

8. Start insufflation by pressing the **START** key.
9. The status line depicts **Initial Insufflation.** The **Initial Insufflation** ends when the nominal pressure value has been reached for the first time. After the **Initial Insufflation**, the flow rate automatically increases to the nominal gas flow specified for level 3. The status line depicts **AirSeal Activated.**

   Note that the use of a Veress cannula is automatically detected by the device. The AirSeal recirculation gas flow is NOT ACTIVATED when performing initial insufflation in the **AirSeal Mode.**

NOTE!

For the safety of the patient, it is advised to start insufflation with a Veress cannula and at the lowest flow rate (level 1, key ①). Exchange the Veress cannula against a conventional trocar once the nominal pressure is reached and the initial insufflation phase ends.

10.

   I. Once the initial insufflation mode is achieved, detach the three-lumen tube set from the single lumen Veress needle extension tube. Remove the blue manifold plug from the side of the cannula housing and attach the tri lumen tube set to the AirSeal® cannula manifold and tighten.

   Push the **AirSeal Mode** button on the device to activate the recirculation gas flow for building up the air seal.

WARNING!

Should the AirSeal Mode button not be pushed before removing the obturator from the cannula, the overpressure in the abdomen can not be maintained. Make sure the recirculation gas flow is activated before removing the obturator.

   II. Once the recirculation gas flow is activated by pushing the **AirSeal Mode** button, the obturator can be removed. The air seal will automatically estab-

lish.

When working in the **AirSeal Mode**, it is possible that body fluids can be extracted from the surgical field over the evacuation line and into the filter housing. In order to prevent contamination of the device, bodily fluid is retained by the fluid trap of the housing component. The capacity of the fluid trap is limited. A warning message will be emitted if the capacity of the fluid trap is reached to 75%. If the fluid trap is full, the AirSeal and the Smoke Evacuation function will stop and the message **Filter contaminated! AirSeal or Smoke Evacuation function stopped! Change tube set to continue operation** will be depicted.

11. Stop insufflation by pressing the **STOP** key.
12. Exchange the tube set as follows:
    - Remove the contaminated tube set from the device by pushing the lever up and pulling the filter component from the receptacle; discharge the used tube set according to applicable waste conditions;
    - Insert new tube set as described above.

EN

7 Safety Functions

7.1 General Safety Functions

Venting system

The device is equipped with an automatic venting system.

When the insufflator detects that the nominal pressure was exceeded by more than 3 to 5 mmHg for longer than 3 to 5 seconds, it automatically activates the venting system. The status line then depicts **Venting Active**.

DANGER!
Please note that the automatic venting system is only active if this function was enabled in the user menu.

DANGER!
The venting rate of the automatic venting system is limited. Always monitor the actual pressure when using additional insufflation sources.

Overpressure

If the overpressure of 3 to 5 mmHg exists longer than 3 to 5 seconds, the status line depicts a corresponding message and a warning signal is emitted.

WARNING!
In case of overpressure above 30 mmHg for longer than 5 seconds insufflation is deactivated.

7.2 Safety Functions in Standard Insufflation Mode and Smoke Evacuation Mode

Occlusion

When tube, Veress needle, or AirSeal® trocar are blocked, the message **Occlusion** is depicted and a warning signal is emitted. The actual pressure display depicts **0**.

Contamination

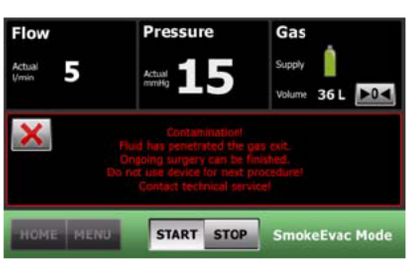

When fluid has penetrated the device via the insufflation tube connection, a **contamination message** is displayed and 3 warning signals. This contamination message is repeated with each Start/Stop. It is possible to conclude the currently ongoing surgery with this device. Insufflation is no longer possible after turning the device off and back on using the ON/OFF key. This is to prevent cross-contamination.

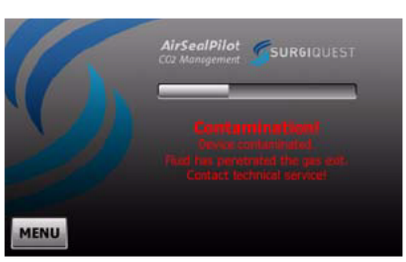

The display depicts **Contamination** if you are switching on an already contaminated device. The device can no longer be used. The contaminated device has to be clearly marked as contaminated and sealed in two separate protective layers of safety foil. Make sure the device can no longer be used until a qualified service technician conducts the appropriate tests and repairs.

7.3 Safety Functions in AirSeal Mode

Stop insufflation

The pressure is reduced slowly before the system comes to a complete stop when stopping the AirSeal insufflation.

Severed tube connection

If the connection of the AirSeal® filter tube set with the AirSeal® trocar is interrupted or severed, the system stops and the warning **Check connection of the AirSeal tube set** is depicted.

Low CO2 concentration

The warning **Check for excessive leakage! Must correct condition!** is depicted when the CO_2 levels drop for 10 seconds. An acoustic warning signal is emitted. The warning disappears if the CO_2 level is restored for 1 second or after pressing the **X** key.

If the CO_2 levels drop for 10 seconds, a new warning replaces the first one: **Continued leckage detected! Unit will shut off in 120 seconds and insufflation will stop!.** An acoustic warning signal is emitted. The warning disappears and the pressure value returns to the previous value once the CO_2 level is restored.

Trocar occlusion

The following warnings are displayed if the trocar is blocked: **Gas exit occluded! Check position of AirSeal® trocar!** An acoustic warning signal is emitted.

7.4 Fill Level Display

The AirSeal® and smoke evacuation tube sets are equipped with fluid sensors to monitor the fluid level in the filters and to warn users of a possible device contamination.

Low fluid level

If the fluid trap of the filter housing is filled to the **Low** fluid level, a **Fill Level Warning** is depicted and an acoustic signal is emitted.

The fill level warning disappears after a few seconds and replaced by **Fluid in filter-Change Cannula position.**

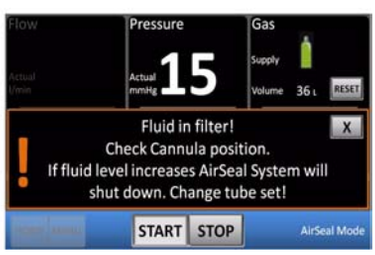

High fluid level

If the fluid trap of the filter housing is filled to the **High** fluid level, a **Contamination Warning** is depicted and an acoustic signal is emitted as well.

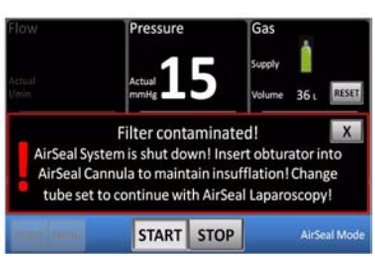

Press the **X** key and the contamination warning disappears and is replaced by the following: **Filter contaminated. AirSeal shut down.**

The AirSeal® system is now switched off but surgery may continue using **Standard Insufflation Mode**. This requires that the obturator is reinserted into the AirSeal® trocar or the AirSeal® tube is connected with the tube adapter to a conventional trocar after conventional trocar is inserted. If AirSeal trocar is removed, the surgeon may wish to insert conventional trocars in same entry point.

Fluid in filter before surgery

If fluid is in the fluid trap before starting insufflation, the warnings **Fluid in filter! Change tube set!** as soon as the **START** key is pressed. An **OK** key is depicted and a warning signal is emitted as well.

Insufflation cannot be restarted until a new tube set has been inserted.

EN

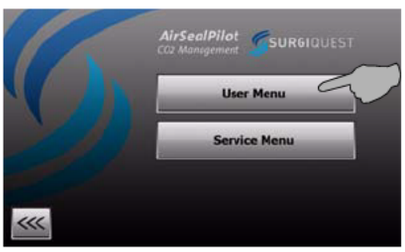

8 User Menu

While insufflation is stopped, press the **MENU** key to open the user or service menu.l

Press the **User Menu** key to access the user menu. Access to the service menu is restricted to trained and authorized service personnel.

Device parameters can be changed in the user menu. The following pages provide an overview as well as a detail description.

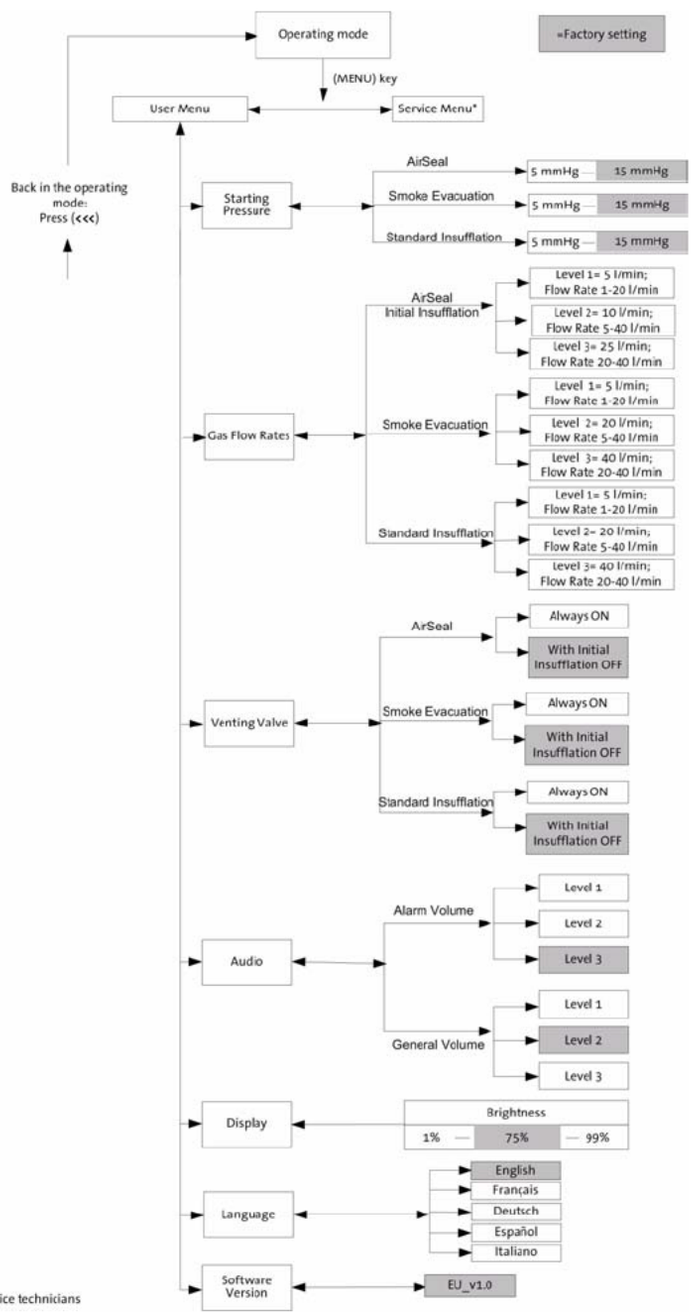

*Access only for service technicians

EN

8.1 Setting First Nominal Pressure

In the user menu, press the **Starting Pressure** key to access the setting.

Select the desired **Starting Pressure** for the currently selected insufflation mode.

Press the **+** or **-** keys to increase or decrease the nominal pressure.

Insufflation operating mode	Factory setting	Range
AirSeal Mode	**15 mmHg**	1-15 mmHg
Smoke Evacuation Mode	**15 mmHg**	1-15 mmHg
Standard Insufflation Mode	**15 mmHg**	1-15 mmHg

8.2 Gas Flow Rates

In the user menu, tap the **Gas Flow Rates** key to access the selection. You can select one of three gas flow rates for each type of insufflation.

Press the **+** or **-** keys to increase or decrease the gas flow.

Insufflation operating mode	Range
AirSeal Mode (Initial Insufflation)	Level 1= 5 l/min (range between 1 and 20)
	Level 2= 20 l/min (range between 5 and 40)
	Level 3= 40 l/min (range between 20 and 40)
Smoke Evacuation Mode	Level 1= 5 l/min (range between 1 and 20)
	Level 2= 20 l/min (range between 5 and 40)
	Level 3= 40 l/min (range between 20 and 40)
Standard Insufflation Mode	Level 1= 5 l/min (range between 1 and 20)
	Level 2= 20 l/min (range between 5 and 40)
	Level 3= 40 l/min (range between 20 and 40)

8.3 Setting the Venting Controls

In the user menu, tap the **Venting** key to access the selection. You can select one of two settings for each type of insufflation.

Insufflation operating mode	
AirSeal Mode	With Initial Insufflation OFF (factory setting)
	Always ON
Smoke Evacuation Mode	With Initial Insufflation OFF (factory setting)
	Always ON
Standard Mode	With Initial Insufflation OFF (factory setting)
	Always ON

8.4 Setting the Alarm Volume

In the user menu, tap the **Volume** key to access the signal volume selection.

You can select one of three volume levels for the warning signals as well as the general signals, all in the form of acoustic signals. The selection/setting applies to all insufflation operating modes.

Press key I, II or III to set the desired volume.

EN

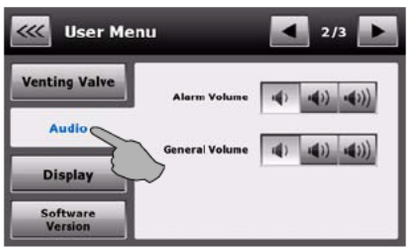

Warning signals	General signals
I (Low)	I (Low)
II (Medium)	II (Medium) factory setting
III (High) factory setting	III (High)

8.5 Configuring the Display

Use the **Display** option to adjust the screen display automatically to the ambient light conditions within the operating room.

Press the ▶ key in the user menu to open the second page of the user menu; then press the **Display** key again to open the brightness setting. Now you can automatically adjust the screen display to the ambient light conditions of the operating room.

Select a brightness setting between 1 and 99%.

Factory setting: 75%

Press the **+** or **-** keys to increase or decrease brightness.

8.6 Setting the Language

Press the ▶ key in the user menu to open the second page of the user menu; then press the **Language** key again to open the language selection.

Select one of five available languages.

Language
English (factory setting)
French
German
Spanish
Italian

Press the corresponding language key to select the desired language.

8.7 Checking Software Version

Press the ▶ key in the user menu to open the second page of the user menu; then press the **Software Version** key again to open the corresponding display.

The software version is depicted.

EN

9 Care and Maintenance

Special care is necessary when servicing, maintaining, and storing the device and its accessories to maintain the functionality of the device and its accessories.

9.1 Cleaning the Device

1. Use the On/Off key to turn the device off.
2. Remove the power cable.
3. Wipe the surface of the device with a soft cloth moistened with the surface disinfectant (for example Meliseptol® rapid). The concentration of the used disinfectant depends on the information provided by the manufacturer of the disinfectant. Make sure moisture does not enter the device.

NOTE!
Do not sterilize the device.

9.2 Annual Inspection

Manufacturer's specifications

The manufacturer stipulates that qualified personnel or hospital technicians must regularly test the device to assess its functionality and technical safety. This inspection has to be carried out once a year. The tests are described in chapter 9 "Care and Maintenance".

Regular inspections will assist in early detection of possible malfunctions. This helps preserve the device and increases its safety and service life.

9.3 Maintenance by Authorized Service Technician

Two-year maintenance interval

An authorized service technician has to inspect and service the device at appropriate intervals to ensure the safety and functionality of the unit. The minimum service interval is two years, depending on frequency and duration of use. If the service interval is not maintained, the manufacturer does not assume any liability for the functional safety of the device.

A sticker located on the rear panel of the device will remind you of the latest date for the next service or maintenance check.

Authorized service technicians are only trained and certified by the manufacturer.

Authorized trained personnel

All of the service tasks, such as changes, modifications, repairs, calibrations, etc. may be carried out only by the manufacturer or manufacturer-approved trained and skilled technicians.

Unauthorized personnel

The manufacturer is not liable for the operational safety of the device if unauthorized persons conduct this maintenance or any other service tasks.

Liability

Unauthorized opening of the device and repairs performed by unauthorized personnel or third parties and/or changes or modifications release the manufacturer of any liability concerning the operational safety of the device.

Technical documents

Receiving technical documentation from the manufacturer does not authorize individuals to perform repairs, adjustments, or alterations on the device or accessories/peripherals.

Certification

Ask the service technician for a certificate after he or she has inspected the unit or performed any service tasks. This certificate lists the type and scope of the service as well as the date and name of the servicing company together wit the signature of the service technician.

EN

9.4 Replacing the Fuse

WARNING!
Before replacing the fuse, check the values of the fuse to be inserted acc. to chapter 13 "Technical Data", page 45.

The fuse may be defective and is in need of replacement if:

- displays and LEDs (if available on your equipment) do not light up,
- the device does not function.

Check to make sure

- the main power supply cable is properly connected to the power supply input and to a safety socket,
- the house power supply fuse is functioning.

DANGER!
Unplug the power cable from the device before checking the fuse.

The device does **not** have to be opened to replace the fuse.

1. Switch device off.
2. Disconnect device from power supply.
3. Remove power connection cable from mains socket.
4. The fuse holder is located next to the mains socket.
5. Remove fuse holder as depicted in Fig. 9-1 "Opening the fuse holder".
6. **A** Undo the latch of the fuse holder with a small screwdriver.
7. **B** Remove the fuse holder.
8. **C** Check fuse.
9. Insert a new fuse. Use only the specified type of fuse (see chapter 13 "Technical Data", page 45).
10. Insert the fuse holder until it can be heard snapping into place.
11. Use the power cable to reconnect the shockproof safety socket with the rear mains socket.

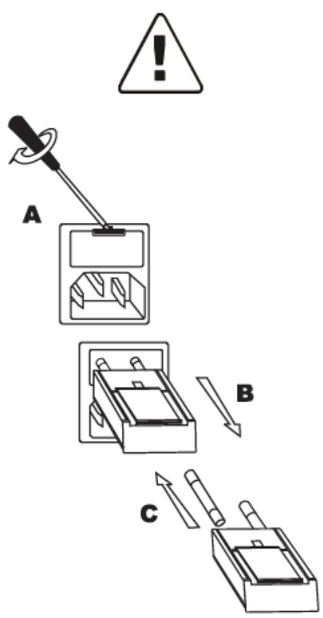

Fig. 9-1 Opening the fuse holder

10 Annual Inspection

Each test conducted has to be documented with date and signature on the test log.

Measured values and tolerances

The following measuring tools and resources were used by the manufacturer to determine the listed measurements and tolerances:

Manometer	Range 0-100 mm Hg, error class 1.6
Syringe	60 ml
Silicone tube	8 x 2 mm
T adapter	8-8-8 mm
Veress cannula	length 100 mm
	opening diameter 1.4 mm,
	inner cannula diameter 1.6 mm

An authorized service technician must check the device if the specified parameters and tolerances are exceeded.

10.1 Safety Test

1. Perform a visual inspection. Make sure that
   - the fuse corresponds with the specifications indicated by the manufacturer,
   - labels and stickers on device are legible,
   - the mechanical condition of the device allows for its safe use,
   - the device is clean to ensure proper and safe functionality.
2. Measure leakage currents according to IEC 60601-1 / EN 60601-1.
3. Measure protective conductor resistance according to IEC 60601-1 / EN 60601-1. The protective conductor resistance is measured while device is connected to the power supply. The max. value is 0.2 Ω.
4. Measure the insulation resistance with 500-700 V DC. The min. value is 50 MΩ The electric strength with high voltage cannot be measured.

As an alternative, perform safety test according to IEC 62353 / EN 62353.

10.2 Basic Function Test

1. Remove single lumen standard insufflation tube from device.
2. Use the ON/OFF switch to turn the device on. The device now conducts a initial self-check. A short acoustic signal can be heard. Select **Standard Insufflation Mode** as the operating mode.
3. The factory default settings are 15 mmHg for the nominal pressure and 3 l/min for the nominal flow.
4. The following values are displayed:
   Nominal Pressure 15 mmHg
   Nominal gas flow rate 3* [mmHg]
   Actual pressure 0 [mmHg]
   Gas consumption 0 [l]
5. Start insufflation:
   Press the START key.
   The following values are displayed: Actual pressure 0 [mmHg]
   Initial insufflation is depicted.
   Streaming gas can be heard at the insufflation tube connection.

EN

6. Select the max. nominal gas flow.
   The following values are displayed:
   Nominal gas flow max. value [l/min]
   Actual pressure 0 [mmHg]
   Insufflating is displayed.
   Streaming gas can be heard at the insufflation tube connection.
7. Stop insufflation:
   Press the **STOP** key.
   The following values are displayed:
   Actual pressure 0 [mmHg]
   Gas consumption >0.0 [l]
8. Press the **RESET** key.
   Gas consumption 0.0 [l]

The basic function check of the device is complete.

10.3 Pressure Sensor Test

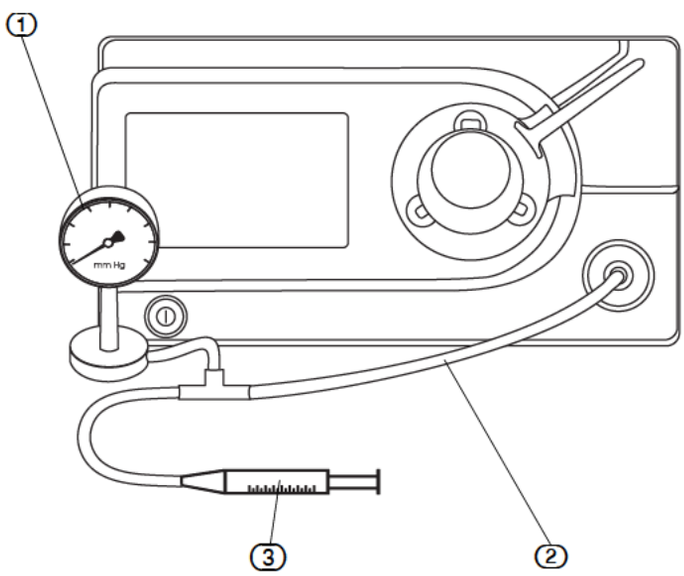

1. Select **Standard Insufflation Mode** as the operating mode.
2. Select a nominal gas flow rate of 1.0 l/min. Do not press the **START/STOP** key.

WARNING!
Never use the syringe to extract gas from the device.

3. Connect a manometer (1) and an air-filled syringe (3) to the insufflation tube connection (2).
4. Use the syringe to generate a pressure of at least 10 mmHg, which is indicated on the manometer.
   Actual pressure display: 10 ±2 [mmHg]
5. Use the syringe to generate a pressure of at least 20 mmHg, which is indicated on the manometer.
   Actual pressure display: 20 ±2 [mmHg]
6. Use the syringe to generate a pressure of at least 30 mmHg, which registers on the manometer.
   Actual pressure display: 30 ±2 [mmHg]

10.4 Pressure Monitoring Test

1. Select **Standard Insufflation Mode** as the operating mode.
2. Select a nominal pressure of 15 mmHg and a nominal gas flow of 3 l/min.
3. Use the syringe to generate a pressure of at least 19 mmHg, which registers on the manometer.

   Start insufflation: Press the **START** key.

   An acoustic warning signal is emitted with a pressure of more than 19 mm Hg (for 5 seconds) and the display depicts **Overpressure**.
4. Reduce the pressure.

   The warning ends when the pressure falls below 19 mmHg (nominal pressure plus 4 mmHg).

   Stop insufflation: Press the **STOP** key.
5. Select a nominal pressure of 29 mmHg.
6. Use the syringe to generate a pressure of at least 30 mmHg, which registers on the manometer.

   Start insufflation: Press the **START** key. An acoustic warning sound is emitted without delay in case pressure exceeds 30 mm Hg and the display then depicts **Overpressure**.
7. Reduce the pressure.

   The warning ends when the pressure falls below 30 mm Hg.
   Stop insufflation: Press the **STOP** key.

10.5 Venting Valve Test

1. Select a nominal pressure of 15 mmHg and a nominal gas flow of 10 l/min.
2. Use the syringe to generate a pressure of at least 18 mm Hg, which registers on the manometer. Start insufflation. The venting valve is activated and the display depicts **Venting system active** if pressure exceeds 18 mm Hg (for 3 seconds).

10.6 Max. Device Pressure Test

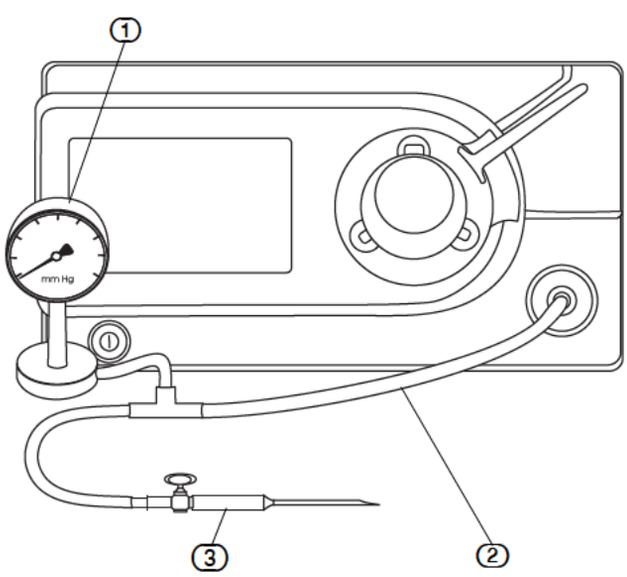

1. Select **Standard Insufflation Mode** as the operating mode.
2. Select the max. nominal gas flow.
3. Connect a manometer (1) and an open Veress cannula (3) to the insufflation tube connection (2).
4. Select the max. gas flow.
5. Start insufflation:

   Press the **START** key.

   The manometer registers a pulsing pressure increase. When the pressure stabilizes, the manometer indicates a maximum pressure between 65 and 75

EN

mmHg.

6. Stop insufflation:
   Press the **STOP** key.

10.7 Gas Flow Rate Test

Test setup with open connection, without connected insufflation tube.

1. Select a nominal gas flow rate of 15 l/min.
2. Start insufflation:
   Press the **START** key.
3. Press the **RESET** key (0.0 l must be depicted).
4. Stop insufflation:
   Press the **STOP** key.

EN

11 Electromagnetic Compatibility

Precautionary measures

Medical devices are subject to special precautionary measures concerning electromagnetic compatibility (hereafter abbreviated as EMC).

Medical devices are subject to special safety and protective measures concerning electromagnetic compatibility (hereafter abbreviated as EMC). This device is to be used only for the purposes described in the manual and has to be installed, set up, and operated in compliance with the EMC notes and instructions.

11.1 Impact of Mobile and Portable HF Communication Devices

The emission of high frequency energy by mobile communication devices may impact the function of the electrical medical device. Operating such devices (e.g., cell phones, GPS phones) in the proximity of the electrical medical device is prohibited.

11.2 Electrical Connections

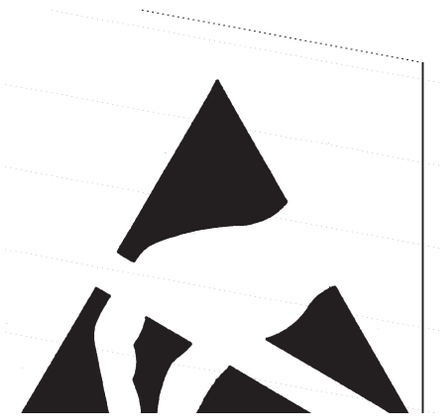

Do not touch electrical connections identified with this warning label. Do not establish a connection between these plugs and sockets without first implementing precautionary ESD (electrostatic discharge) measures.

ESD (Electrostatic Discharge) precautionary measures

The following are ESD precautionary measures:

- Apply potential equalization (PE), if available on your equipment, to all devices to be connected.
- Use only the listed equipment and accessories.

Employees have to be informed about and trained in ESD precautionary measures.

11.3 Accessories (TBD)

11.4 Guidelines and Manufacturer's Statement – Electromagnetic Emissions

The device DPIS 2000 System is intended for use in the electromagnetic environment specified below. The user/operator of the DPIS 2000 System should make sure the device is operated within such an environment.

Emitted interference measurements	Compliance	Electromagnetic environment guidelines
HF emission according to CISPR 11	Group 1	The device DPIS 2000 System uses HF energy solely for its internal functions. Therefore, the camera's HF emission is very low and it is unlikely that devices in close proximity will experience interference.
HF emission according to CISPR 11	Class B	The device DPIS 2000 System is suitable for use in all facilities including those in residential areas and those directly connected to a public utility network supplying buildings used for residential purposes as well.
Emission of harmonic oscillations according to IEC 61000-3-2	Class A	
Emission of voltage fluctuations / flickers according to IEC 61000-3-3	In compliance	

11.5 Guidelines and Manufacturer's Statement - Electromagnetic Interference Immunity

The device DPIS 2000 System is intended for use in an electromagnetic environment as described below. The user/operator of the DPIS 2000 System should make sure the device is operated within such an environment.

Electromagnetic interference immunity tests	Test level	Compliance	Electromagnetic environment guidelines
Discharge of static electricity (ESD) according to IEC 61000-4-2	± 6 kV contact discharge ± 8 kV air discharge	In compliance	Floors should be made from wood or concrete or covered with ceramic tiles. If the floor covering consists of synthetic material, the relative humidity should be at least 30%.
Electrical fast transients / bursts according to IEC 61000-4-4	± 2 kV for AC power lines ± 1 kV for input and output lines	In compliance	The quality of the supply voltage should be the same as the voltage of a typical business or hospital environment.
Surges according to IEC 61000-4-5	± 1 kV normal mode voltage, ± 2 kV common mode voltage	In compliance	The quality of the supply voltage should be the same as the voltage of a typical business or hospital environment.
Blackouts, brownouts, and fluctuations of the power supply according to IEC 61000-4-11	< 5% U_T* (> 95% dip in the U_T) for ½ cycle	In compliance	The quality of the supply voltage should be the same as the voltage of a typical business or hospital environment. If the user/operator of device requires the continuation of functionality after power interruptions/disruptions, it is recommended to supply the device with power from an uninterruptible power supply.
	40% U_T (60% dip in the U_T) for 5 cycles.		
	70% U_T (30% dip in the U_T) for 25 cycles.		
	< 5% U_T (> 95% dip in the U_T)for 5 s		
Supply frequency magnetic field (50/60 Hz) according to IEC 61000-4-8	3 A/m	In compliance	Magnetic fields of the mains power frequency should comply with the typical values of business and hospital environments.

*Note: U_T is the mains alternating voltage before applying the test levels.

EN

11.6 Guidelines and Manufacturer's Statement - Electromagnetic Interference Immunity - for the Device DPIS 2000 System

Electromagnetic interference immunity tests	Test level	Compliance	Electromagnetic environment guidelines
Conducted HF interference quantities according to IEC 61000-4-6 Radiated HF interference quantities according to IEC 61000-4-3	3 V_{eff} 150 kHz to 80 MHz 3 V/m 80 MHz to 2.5 GHz	In compliance In compliance	Portable and mobile wireless devices should not be used in closer proximity to the device DPIS 2000 System (including cables/lines) than the recommended safety distance calculated based on the transmitting frequency and the applicable formula. Recommended safety distance: $d = 1.2\sqrt{P}$ for 150 KHz to 80 MHz $d = 1.2\sqrt{P}$ for 80 MHz to 800 MHz $d = 2.3\sqrt{P}$ for 800 MHz to 2.5 GHz With **P** as the rated output of the transmitter in watts [W] according to the information provided by the manufacturer of the transmitter and **d** as recommended safety distance in meters [m]. The field strength of stationary transmitters for all frequencies tested on site [a] should be lower than the concordance level. [b] Interference is possible in the proximity of devices featuring the following pictograph. 

Note 1: The higher frequency range applies for 80 and 800 MHz.

Note 2: These guidelines are probably not realizable in all cases. The distribution and spread of electromagnetic quantities differs depending on the absorption and reflection of buildings, objects, and people.

[a] The field strength of stationary transmitters such as base stations of wireless phones and cell phones, ham radio operators, AM and FM radio and TV stations can theoretically not always determined in advance. A study of the installation site should be considered to determine the electromagnetic environment concerning the stationary transmitter. If the measured field strength at the proposed DPIS 2000 System installation and operation site exceeds the concordance levels listed above, the DPIS 2000 System should be monitored to document proper functionality and operation as intended. If unusual performance characteristics are observed, additional measures may be required such as changing orientation or the location of the device DPIS 2000 System.

[b] The field strength should be less than 3 V/m for the frequency range of 150 kHz to 80 MHz.

11.7 Recommended Safety Distances between Portable and Mobile HF Telecommunications Devices and the DPIS 2000 System

Recommended safety distances between portable and mobile HF telecommunications devices and the DPIS 2000 System			
The DPIS 2000 System is intended for use in an electromagnetic environment where HF interferences are controlled. The user/operator of the DPIS 2000 System can contribute to lowering electromagnetic emissions by complying with the minimum distance between portable and mobile HF telecommunications devices (transmitters) and the DPIS 2000 System - depending on the output power of the communication device listed below.			
Rated output of the transmitter [W]	Safety distance based on the transmitting frequency [m]		
	150 kHz to 80 MHz $d = 1.2\sqrt{P}$	**80 MHz to 800 MHz** $d = 1.2\sqrt{P}$	**800 MHz to 2.5 GHz** $d = 2.3\sqrt{P}$
0,01	0,12	0,12	0,23
0,1	0,38	0,38	0,73
1	1,2	1,2	2,3
10	3,8	3,8	7,3
100	12	12	23

The safety distance d in meters [m] for transmitters with a max. rated output not listed in the table above can be calculated by applying the corresponding formula in the respective column. P is the max. rated output of the transmitter in watts [W] according to the information provided by the manufacturer of the transmitter.

Note 1: The higher frequency range applies to 80 and 800 MHz.

Note 2: These guidelines are probably not realizable in all cases. The distribution and spread of electromagnetic quantities differs depending on the absorption and reflection of buildings, objects, and people.

EN

12 Error and Warning Messages

Status line display

Information for users displayed in the status display are depicted only temporarily and disappear again after a few seconds.

Information for users	Cause
Initial insufflation!	Displayed until the set nominal pressure is reached.
Insufflating	Insufflation is carried out in Smoke Evacuation or Standard Insufflation Mode.
Device ready	Operating mode selected and valid tube inserted. Insufflation can be started.

Information, error and warning messages

Depending on the type of message (error message, warning messages, informational message), windows with green, yellow, and red frames are depicted.

Informational message	Green frame
Warning message	Yellow frame
Error message	Red frame

The message windows may feature an OK key, a service key, or no key, depending on content.

- OK key: The user must acknowledge the message.
- Service key: Select this key to open the service area.
- No key: Message windows are automatically hidden if certain criteria have been met (e.g. warming up a device if temperature is too low).

Informational message	Cause	Remedy
Demo mode!	The device is "running" in demo mode.	Switch to operating mode.
AirSeal activated!	Nominal pressure has been reached. The device is "running" in AirSeal mode.	Switch to operating mode.
Insufflation stopped!	In Smoke Evacuation and Standard Insufflation Mode. Insufflation stopped by pressing the STOP key.	Switch to operating mode.
AirSeal stopped!	AirSeal insufflation stopped by pressing the STOP key.	Switch to operating mode.
Connect Smoke Evacuation tube set!	Smoke Evacuation mode selected.	Insert a valid tube set.
Connect AirSeal® tube set!	AirSeal mode selected.	Insert a valid tube set.
Venting active!	The venting valve is enabled.	
Insufflating-connect green Smoke Evacuation tube!	Insufflation in Smoke Evacuation mode started. Evacuation tube not connected.	Connect a valid tube.

Warning Messages	Cause	Remedy
Demo mode!	The device is "running" in demo mode and the START key was pressed.	Switch to operating mode.
Invalid code!	Incorrect code entered to access the service menu.	Enter the correct code.
Starting....Don't install tube set until self test complete!	Initial self-check is "running."	Wait until the initial self-check has completed.
Smoke Evacuation stopped-suction line blocked!	Evacuation blocked.	Check the evacuation/suction system for proper function.
Smoke Evacuation stopped- low pressure!	Pressure too low.	Check for possible leaks.

Smoke Evacuation stopped-low CO2 level!	CO2 concentration too low.	Check for possible leaks.
Occlusion!	The tube, Veress cannula, or the AirSeal® trocar has a blockage:	Localize the cause and open/eliminate the occlusion.
Gas exit occluded! Check position of AirSeal® Trocar!	AirSeal® trocar occlusion.	Check to see the trocar is correctly positioned in the abdomen.
Fluid in filter! Check trocar position! If fluid level increases, Smoke Evacuation will stop! Change tube set!	Low fluid level of the fluid trap in the filter housing during Smoke Evacuation mode.	Please insert a new tube set.
Fluid in filter! Check trocar position! If fluid level increases, AirSeal will shut down! Change tube set!	Low fluid level of the fluid trap in the filter housing during AirSeal mode.	Please insert a new tube set.
Fluid in filter! Change tube set!	Low fluid level of the fluid trap in the filter housing during AirSeal mode.	Please insert a new tube set.
Filter contaminated! Smoke Evacuation function stopped! Change tube set to continue Smoke Evacuation!	High fluid level of the fluid trap in the filter housing during Smoke Evacuation mode.	Please insert a new tube set.
Filter contaminated! AirSeal is shut down! Change tube set to continue with AirSeal!	High fluid level of the fluid trap in the filter housing during AirSeal mode.	Please insert a new tube set.
Change gas bottle!	Gas bottle pressure 15-30 bar.	Prepare for changing the gas bottle.
Check for excessive leakage!	CO2 < 70% 10 seconds long.	Check for possible leaks.
Change gas bottle! AirSeal will shut down soon!	Very low gas bottle pressure.	Prepare for changing the gas bottle.

Error Messages	**Cause**	**Remedy**
Safety threshold > 15 mmHg!	The pressure monitor shows that the actual pressure is 15 mmHg above the safety threshold.	Determine the cause for exceeding the nominal pressure. Check the electronic controls of the device if overpressure exists for a longer period of time.
Filter contaminated! Smoke Evacuation function stopped! Change tube set to continue Smoke Evacuation!	High fluid level of the fluid trap in the filter housing during Smoke Evacuation mode.	Please insert a valid tube.
Contamination! Fluid has penetrated the gas exit! Ongoing surgery can be finished! Do not use device for next procedure! Contact technical service!	The device is contaminated with fluid.	The device must be checked by an authorized service technician or clearly marked with a label referring to the contamination and then twice enclosed in a safety foil, sealed, and returned to the manufacturer for repairs.
Concentration of the abdominal CO2 is low! Abdominal pressure is reduced to 12 mmHg. Seal excessive leakage!	CO2 < 70% 10 second + 30 seconds long.	Check for possible leaks.
Check gas supply! AirSeal will shut down after 30s! Abdominal pressure is reduced to 12 mmHg!	Insufflation gas supply (bottle or house supply) during AirSeal insufflation.	Check gas supply.
Check gas supply! Insufflation stopped!	Insufflation gas supply (bottle or house supply).	Check gas supply.
Check gas supply! AirSeal is shut down!	Insufflation gas supply (bottle or house supply) during AirSeal insufflation.	Check gas supply.
Overpressure! Venting active!	The actual pressure is above the nominal pressure.	Determine the cause for exceeding the nominal pressure. Check the electronic controls of the device if overpressure exists for a longer period of time.
Overpressure!	The actual pressure is 3 mmHg above the nominal pressure for longer than 5 seconds.	Determine the cause for exceeding the nominal pressure. Check the electronic controls of the device if overpressure exists for a longer period of time.
Check connection of AirSeal® tube set!	Connection between AirSeal® tube set and the AirSeal® trocar severed.	Check connections between AirSeal® tube set and AirSeal® trocar.

EN

Venting valve defective!	Defective venting valve.	Please contact the service department.
Remove wrong tube set! Connect Smoke Evacuation tube set!	Smoke Evacuation mode selected with AirSeal® tube set inserted.	Please insert a valid tube.
Remove wrong tube set! Connect AirSeal® tube set!	AirSeal mode selected and Smoke Evacuation tube set inserted.	Please insert a valid tube.
Remove wrong tube set!	Tube set inserted during initial self-check.	Please remove tube set.
Tube set contaminated! Insert new tube set!	Contamination.	Please insert a valid tube.
Device contaminated! Fluid has penetrated the gas exit. Contact technical service!	Contamination.	Please contact the service department.
Check gas supply!	Insufflation gas supply (bottle or house supply).	Check gas supply.
Electronic defective!	Malfunctions in the electronic system.	Restart the device. If the malfunction or error occurs again, please contact the service department.
Calibration error!	The device is not calibrated properly.	The device must be re-calibrated. Please contact the service department.
Sensor defective!	Defective pressure sensor.	Restart the device. If the malfunction or error occurs again, please contact the service department.
Device temperature error!	Temperature in device too high.	Serious error. Do not use device. Please contact the service department.
Valve error!	Defective valve.	Serious error. Do not use device. Please contact the service department.

EN

13 Technical Data

Mains voltage range[1] [V]		115V/230V		
Supply frequency range [Hz]		230V 50 Hz 115V 60Hz		
Fuse designation[2]		T 10 A, UL-recognized		
Power consumption		Current [A]	Voltage [V]	Power consumption [VA]
Upper voltage range				
	Normal operation	2,5	230	460
	Full load	4	230	736
Lower voltage range				
	Normal operation	5	115	460
	Full load	8	115	736
Protection class (I, II, III)		I		
Application part of the type (B, BF, CF)		BF		
IP code[3])		21		
Classification[4] (I, IIa, IIb, III)		IIa		
Conformity with the following standards:		EN 60601-1:2006 / IEC 60601-1:2005 EN 60601-1-2:2007 / IEC 60601-1-2:2007		
Operating conditions		10 to 30°C / 50 to 86°F 30 to 75% rel. humidity 700 to 1060 hPa air pressure 3000 m max. altitude above sea level for device use		
Storage and transportation conditions		-25 to +70°C /-13 to 158°F 10 to 95 % rel. humidity 700 to 1060 hPa air pressure		
Max. sound level:		tbd		
Inlet pressure range		80 bar		
Flow volume (range)		40 sl/min.		
Adjustable values	Pressure [mmHg]	20		
	Flow [l/min]	1-40		
Precision[5]	Pressure [mmHg]	+- 1 mmHg		
	Flow [l/min]	+- 2.5 sl/min.		
Accuracy[6]	Pressure [mmHg]	+- 1 mmHg		
	Flow [l/min]	+- 2.5 sl/min.		
Dimensions	Width x Height x Depth [mm³]	420 x 220 x 470		
Weight [kg]		27		
Interfaces:		Service interface (USB port)		
		Mains power connection (IEC-60320-1 C14)		
Software version:	How to determine the software version: See service manual			

1. Identification according to IEC 61293; example: 100-240V or 110V/220V

2. Identification necessary if fuse holder is contact part; information about voltage, power, trigger speed, and shutdown ability required; example: 2x T 3.15 AH, 250 V, UL-recognized

3. See DIN EN 60529, part 9

EN

4. Acc. to 93/42/EEC

5. Formerly "repetition accuracy" - describes the reproducibility of a measurement ("internal precision")

6. Degree of match between displayed (actual) and correct (nominal) value; typical info "x% Full Scale"

EN

14 Accessories (TBD)

EN

15 Test Log

15.1 Test Log

Date	Results	Comment	Signature

EN

15.2 Return Form

Please fill out this form when returning the device:

Name of owner:

Sales partner:

Address of person returning unit:

Street:	**House number**:

ZIP/Postal code:	**City:**

Country:

IMPORTANT!

Serial number (see identification plate):

Device type:

Description of defect:

Contact **Signature** **Date**

EN

Index

14. Sterilization and Shelf Life

Please refer to the attached information regarding the sterilization and shelf life validation.

14. Sterilization and Shelf Life

The SurgiQuest AirSeal® Optical Trocar & Cannula System with integrated Insufflator DPIS 2000 (the "DPIS 2000 System") is equipped with the following single use components that will be supplied sterile:

- AirSeal® Optical Trocar (the "Optical Trocar")
- Air Seal® Blunt Tipped Trocar (the "Blunt Tip Trocar")
- AirSeal® Cannula (the "Cannula")
- Smoke Evacuation Tube Set (the "Smoke Evacuation Tube Set")
- AirSeal® Tube Set (the "AirSeal Tube Set") with attached Veress Needle Adapter Tube Set (the "Veress Needle Tube Set")
- Standard Insufflation Tube Set (the "Insufflation Tube Set")

1. Optical Trocar, Blunt Tip Trocar, Cannula, Smoke Evacuation Tube Set, Air Seal Tube Set with attached Veress Needle Tube Set

Each Optical Trocar and each Blunt Tip Trocar will be packed and supplied together with a Cannula in a PETG Blister with Tyvek Lid. Each Smoke Evacuation Tube Set and each Air Seal Tube Set with attached Veress Needle Tube Set will be packed and supplied in a double mylar / Tyvek pouch.

The Optical Trocar, the Blunt Tip Trocar, the Cannula, the Smoke Evacuation Tube Set and the AirSeal Tube Set with attached Veress Needle Tube Set will be supplied sterile by means of gamma radiation. The validation of the sterilization was completed in connection with the pre-market clearance submissions for the predicate devices AirSeal Optical Trocar & Cannula System, which have been cleared by FDA (k092504, k083211, k071571) (the "AirSeal Predicate Devices") and in accordance with the international standard **ISO 11137 -1, "Sterilization of health care products - Radiation - Part 1: Requirements for development, validation, and routine control of a sterilization process for medical devices"**, **ISO 11137 -2, "Sterilization of health care products -- Radiation -- Part 2: Establishing the sterilization dose"** and **AAMI TIR 27, "Sterilization of Healthcare Products: Radiation Sterilization - Substantiation of 25kGY as a Sterilization Dose - Method VD Max".** A sterility assurance level (SAL) of 10^{-6} was achieved. The Optical Trocar, the Blunt Tip Trocar, the Cannula and the Air Seal® Tube Sets are identical in design, material and packaging to the trocars, cannula and tube set available with AirSeal Predicate Devices except for minor dimensional modifications that do not have any effect on sterilization.

The sterility shelf life for the Optical Trocar, the Blunt Tip Trocar, the Cannula, the Smoke Evacuation Tube Set and the Air Seal Tube Set with attached Veress Needle Tube Set is three (3) years. The samples used for stability testing were

sterilized through two (2) sterilization exposure cycles and also underwent accelerated aging studies along with parallel real time studies. Testing was completed in accordance with **ISO11607-1, "Packaging for Terminally Sterilized Medical Devices", ASTM-F-1980-02, "Standard for Accelerated Aging of Sterile Medical Device Packages"** and **ISO 11137 -2, "Sterilization of health care products -- Radiation -- Part 2: Establishing the sterilization dose".** Both package and product integrity were tested in accordance with these standards.

The Smoke Evacuation Tube Set will be supplied sterile by means of gamma radiation. The validation of the sterilization will be completed in accordance with **ISO 11137 -1 "Sterilization of health care products - Radiation - Part 1: Requirements for development, validation, and routine control of a sterilization process for medical devices"** and **AAMI TIR 27:2001 "Sterilization of Healthcare Products: Radiation Sterilization - Substantiation of 25kGY as a Sterilization Dose - Method VD Max.** The sterility shelf life for the Smoke Evacuation Tube Set will be three (3) years. Stability testing will be performed using samples that will be sterilized through two (2) sterilization exposure cycles and will also undergo accelerated aging studies along with parallel real time studies. Testing will be completed in accordance with **ISO11607-1, "Packaging for Terminally Sterilized Medical Devices"** and **ASTM-F-1980-02, "Standard for Accelerated Aging of Sterile Medical Device Packages"**. Both package and product integrity will be tested in accordance with these standards.

2. Insufflation Tube Set

The Insufflation Tube Set of the DPIS 2000 System will be packed and supplied in a soft Tyvek blister covered with PA/PE foil.

The tubing of the Insufflation Tube Set for use with the DPIS 2000 is identical in material to the tubing of the insufflation tube set that has been cleared by FDA as an accessory to the predicate device 45 L CORE Insufflator F114 (k063367), (b)(4) [redacted] Accordingly the sterilization validation is also valid for the Insufflation Tube Set of the DPIS 2000 System. (b)(4) (b)(4) [redacted] materials of the Insufflation Tube Set consist of ETO-non absorbable materials. Therefore these materials have no effect on the sterilization process.

The validation of the sterilization was made in accordance with the international standard **ISO 11135-1, "Sterilization of health care products – Ethylene Oxide – Part 1: Requirements for the development, validation, and routine control of a sterilization process for medical devices"**. The maximum levels of residual gas were determined in accordance with the FDA recognized standard **ISO 10993-7,** "**Biological Evaluation of Medical Devices – Part 7: Ethylene Oxide sterilization residuals**". Residual ethylene oxide (EO) and ethylene

chlorohydrin (ECH) data shows that the limit of EO < 5 mg / 10 days and ECH < 5 mg / 10 days that remain on the tube set will not be exceeded. A sterility assurance level (SAL) was $\leq 10^{-6}$.

The sterility shelf life for the Insufflation Tube Set will be three (3) years. The samples to be used for stability testing will be sterilized through two (2) sterilization exposure cycles and also undergo accelerated aging studies along with parallel real time studies. Testing will be done in accordance with **ISO11607-1, "Packaging for Terminally Sterilized Medical Devices"** and **ASTM-F-1980-02, "Standard for Accelerated Aging of Sterile Medical Device Packages"**. Both package and product integrity will be tested in accordance with these standards.

15. Biocompatibility

Please refer to the attached information about the biocompatibility evaluation.

15. Biocompatibility

1. AirSeal® Trocars and Cannula

The only components of the SurgiQuest AirSeal® Optical Trocar & Cannula System with integrated Insufflator DPIS 2000 (the "DPIS 2000 System") that come into short term direct tissue contact are the (b)(4) [redacted] (b)(4) [redacted]

The Cannula consists of medical grade (b)(4) [redacted] has been well characterized chemically and physically in the published literature and has a long history of safe use with regards to biocompatibility. In addition, the Cannula of the proposed device is identical in material and manufacturing to the cannula of the predicate AirSeal Optical Trocar & Cannula Systems (k092504, k083211 and k071571) (the "AirSeal Predicate Devices").

The tip and the shaft of the Optical Trocar consist of medical grade (b)(4) [redacted] and medical grade stainless steel, respectively. The O-Ring located on the shaft consists of medical grade silicone. Like (b)(4) [redacted] medical grade stainless steel and medical grade silicone have been well characterized chemically and physically in the published literature and have a long history of safe use with regards to biocompatibility. In addition, the Optical Trocar of the proposed device is identical in material and manufacturing to the trocar of the AirSeal Predicate Devices.

The tip and the shaft of the Blunt Tip Trocar consist of medical grade (b)(4) [redacted] and the O-Ring located on the shaft consists of medical grade silicone. The fixation device consists of medical grade (b)(4) [redacted] medical grade stainless steel, medical grade (b)(4) [redacted] and medical grade silicone. All above listed materials have been well characterized chemically and physically in the published literature and have

a long history of safe use with regards to biocompatibility. In addition, each of the Blunt Tip Trocar and the fixation device of the proposed device are identical in material and manufacturing to the blunt tipped trocar and fixation device of the AirSeal Predicate Devices.

Finally, cytotoxicity, irritation and hypersensitivity testing following GLP with the cannula, the optical trocar, the blunt tipped trocar and fixation device of the AirSeal Predicate Devices in accordance with the FDA recognized standard **ISO 10993-5, "Biological Evaluation of Medical Devices – Part 5: Tests for InVitro Cytotoxicity"**, **ISO 10993-10, "Biological Evaluation of Medical Devices – Part 10: Tests for Irritation and Delayed Type Hypersensitivity",** and **ISO 10993-12, "Biological Evaluation of Medical Devices – Part 12: Sample Preparation and Reference Material"** has been performed by (b)(4) [redacted] (b)(4) [redacted]

2. **Smoke Evacuation Tube Set and AirSeal Tube Set with attached Veress Needle Adapter Tube Set, Standard Insufflation Tube Set**

The only components of both the Smoke Evacuation Tube Set and the AirSeal Tube Set with attached Veress Needle Adapter Tube Set that come into short term indirect contact with the patient are the filter housing, the filters and the tubing, which consist of the following medical grade materials:

(b)(4) [redacted]

All the above listed materials have been well characterized chemically and physically in the published literature and have a long history of safe use with regards to biocompatibility. In addition, the AirSeal Tube Set with attached Veress Needle Adapter Tube Set is identical in material and manufacturing to the tube set of the Tube Set of the AirSeal Predicate Devices.

Finally, cytotoxicity, irritation and hypersensitivity testing following GLP with the tube set of the AirSeal Predicate Devices in accordance with the FDA recognized standard **ISO 10993-5, "Biological Evaluation of Medical Devices – Part 5: Tests for InVitro Cytotoxicity"**, **ISO 10993-10, "Biological Evaluation of Medical Devices – Part 10: Tests for Irritation and Delayed Type Hypersensitivity", as amended 2006** and **ISO 10993-5, "Biological Evaluation of Medical Devices – Part 12: Sample Preparation and Reference Material"** has been performed by (b)(4) [redacted]

The ISO 10993 tripartite testing sighted above will be conducted on the Smoke Evacuation Tube Set.

The components of the Insufflation Tube Set for the DPIS 2000 System that come into indirect short term contact with the patient are the filter, the tubing, the Luer Lock connectors and the suction connector and consist of the following medical grade plastic and glass fiber materials:

(b)(4) [redacted]

All the above listed materials have been well characterized chemically and physically in the published literature and have a long history of safe use with regards to biocompatibility.

16. Software

Please refer to the attached Software Documentation for the proposed device.

16. Software

Please refer to the attached software documentation for the insufflation, recirculation and filtration unit of the DPIS 2000 System (the "DPIS 2000 Unit") of the proposed device. The software development was performed in accordance with the (b)(4) [redacted] As described in the attached software documentation the software for device presents a (b)(4) [redacted] level of concern as defined in FDA's *Guidance for the Content of Premarket Submissions for Software Contained in Medical Devices*, issued on May 11, 2005 ("Software Guidance Document").

[Accordingly, the software documentation of the DPIS 2000 Unit includes the following chapters as required for a software-controlled device that presents a (b)(4) [redacted] level of concern: (1) Software Description, (2) Device Hazard Analysis, (3) Summary of Software Requirements Specification (SRS), (4) Traceability Analysis, (5) Verification, Validation Documentation, (6) Revision Level History, (7) Unresolved Anomalies (Bugs), and (8) the Release Version Number. Please refer to the software documentation attached hereto as **Attachment 1**.]

The device hazard analysis is provided in form of a risk analysis in accordance with the consensus standard ISO 14971, "Medical Devices - Application of risk management to medical devices". Please refer to the risk analysis attached hereto as **Attachment 2**. In addition, please refer to the (b)(4) [redacted] (b)(4) [redacted] attached hereto as **Attachment 3**.

Attachment 1

(b)(4) Third Party Software Documentation

(b)(4) Third Party Software Documentation

(b)(4) Third Party Software Documentation

(b)(4) Third Party Software Documentation

(b)(4) Third Party Software Documentation

(b)(4) Third Party Software Documentation

(b)(4) Third Party Software Documentation

(b)(4) Third Party Software Documentation

(b)(4) Third Party Software Documentation

(b)(4) Third Party Software Documentation

(b)(4) Third Party Software Documentation

(b)(4) Third Party Software Documentation

(b)(4) Third Party Software Documentation

(b)(4) Third Party Software Documentation

(b)(4) Third Party Software Documentation

(b)(4) Third Party Software Documentation

(b)(4) Third Party Software Documentation

(b)(4) Third Party Software Documentation

(b)(4) Third Party Software Documentation

(b)(4) Third Party Software Documentation

(b)(4) Third Party Software Documentation

(b)(4) Third Party Software Documentation

(b)(4) Third Party Software Documentation

(b)(4) Third Party Software Documentation

(b)(4) Third Party Software Documentation

(b)(4) Third Party Software Documentation

(b)(4) Third Party Software Documentation

(b)(4) Third Party Software Documentation

(b)(4) Third Party Software Documentation

(b)(4) Third Party Software Documentation

(b)(4) Third Party Software Documentation

(b)(4) Third Party Software Documentation

(b)(4) Third Party Software Documentation

(b)(4) Third Party Software Documentation

(b)(4) Third Party Software Documentation

(b)(4) Third Party Software Documentation

(b)(4) Third Party Software Documentation

(b)(4) Third Party Software Documentation

(b)(4) Third Party Software Documentation

(b)(4) Third Party Software Documentation

(b)(4) Third Party Software Documentation

(b)(4) Third Party Software Documentation

(b)(4) Third Party Software Documentation

(b)(4) Third Party Software Documentation

(b)(4) Third Party Software Documentation

(b)(4) Third Party Software Documentation

(b)(4) Third Party Software Documentation

(b)(4) Third Party Software Documentation

(b)(4) Third Party Software Documentation

(b)(4) Third Party Software Documentation

(b)(4) Third Party Software Documentation

(b)(4) Third Party Software Documentation

(b)(4) Third Party Software Documentation

Attachment 2

(b)(4) Risk Analysis

(b)(4) Risk Analysis

(b)(4) Risk Analysis

(b)(4) Risk Analysis

(b)(4) Risk Analysis

(b)(4) Risk Analysis

(b)(4) Risk Analysis

(b)(4) Risk Analysis

(b)(4) Risk Analysis

(b)(4) Risk Analysis

(b)(4) Risk Analysis

(b)(4) Risk Analysis

(b)(4) Risk Analysis

(b)(4) Risk Analysis

(b)(4) Risk Analysis

(b)(4) Risk Analysis

(b)(4) Risk Analysis

(b)(4) Risk Analysis

(b)(4) Risk Analysis

(b)(4) Risk Analysis

(b)(4) Risk Analysis

Attachment 3

(b)(4) Third Party Risk Analysis

(b)(4) Third Party Risk Analysis

(b)(4) Third Party Risk Analysis

(b)(4) Third Party Risk Analysis

(b)(4) Third Party Risk Analysis

(b)(4) Third Party Risk Analysis

(b)(4) Third Party Risk Analysis

(b)(4) Third Party Risk Analysis

(b)(4) Third Party Risk Analysis

(b)(4) Third Party Risk Analysis

(b)(4) Third Party Risk Analysis

(b)(4) Third Party Risk Analysis

(b)(4) Third Party Risk Analysis

(b)(4) Third Party Risk Analysis

(b)(4) Third Party Risk Analysis

(b)(4) Third Party Risk Analysis

(b)(4) Third Party Risk Analysis

(b)(4) Third Party Risk Analysis

(b)(4) Third Party Risk Analysis

(b)(4) Third Party Risk Analysis

(b)(4) Third Party Risk Analysis

(b)(4) Third Party Risk Analysis

(b)(4) Third Party Risk Analysis

(b)(4) Third Party Risk Analysis

(b)(4) Third Party Risk Analysis

(b)(4) Third Party Risk Analysis

(b)(4) Third Party Risk Analysis

(b)(4) Third Party Risk Analysis

(b)(4) Third Party Risk Analysis

(b)(4) Third Party Risk Analysis

(b)(4) Third Party Risk Analysis

(b)(4) Third Party Risk Analysis

19. Performance Testing – Animal

This section does not apply.

20. Performance Testing – Clinical

This section does not apply.

21. Others

Please refer to the attached Forms FDA-3654 for all standards referenced in this submission.

Form Approved: OMB No. 0910-0120; Expiration Date: 8/31/10

Department of Health and Human Services

Food and Drug Administration

STANDARDS DATA REPORT FOR 510(K)S

(To be filled in by applicant)

This report and the Summary Report Table are to be completed by the applicant when submitting a 510(k) that references a national or international standard. A separate report is required for each standard referenced in the 510(k).

TYPE OF 510(K) SUBMISSION

☒ Traditional ☐ Special ☐ Abbreviated

STANDARD TITLE [1]

IIEC 60601-1, Medical Electrical Equipment - Part 1: General Requirements for Safety

Please answer the following questions	*Yes*	*No*
Is this standard recognized by FDA [2]?	☒	☐
FDA Recognition number [3]	# 5-4	
Was a third party laboratory responsible for testing conformity of the device to this standard identified in the 510(k)?	☒	☐
Is a summary report [4] describing the extent of conformance of the standard used included in the 510(k)? If no, complete a summary report table.	☐	☒
Does the test data for this device demonstrate conformity to the requirements of this standard as it pertains to this device?	☒	☐
Does this standard include acceptance criteria? If no, include the results of testing in the 510(k).	☒	☐
Does this standard include more than one option or selection of the standard? If yes, report options selected in the summary report table.	☐	☒
Were there any deviations or adaptations made in the use of the standard?	☐	☒
If yes, were deviations in accordance with the FDA supplemental information sheet (SIS) [5]?	☐	☐
Were deviations or adaptations made beyond what is specified in the FDA SIS? If yes, report these deviations or adaptations in the summary report table.	☐	☒
Were there any exclusions from the standard? If yes, report these exclusions in the summary report table.	☐	☒
Is there an FDA guidance [6] that is associated with this standard?	☐	☒
If yes, was the guidance document followed in preparation of this 510k?	☐	☐

Title of guidance: _____

[1] The formatting convention for the title is: [SDO] [numeric identifier] [title of standard] [date of publication]

[2] Authority [21 U.S.C. 360d], www.fda.gov/cdrh/stdsprog.html

[3] http://www.accessdata.fda.gov/scripts/cdrh/cfdocs/cfStandards/search.cfm

[4] The summary report should include: any adaptations used to adapt to the device under review (for example, alternative test methods); choices made when options or a selection of methods are descr bed; deviations from the standard; requirements not applicable to the device; and the name address of the test laboratory or certification body involved in conformance assessment to this standard. The summary report includes information on all standards utilized during the development of the device.

[5] The supplemental information sheet (SIS) is additional information which is necessary before FDA recognizes the standard. Found at http:/www.accessdata.fda.gov/scripts/cdrh/cfdocs/cfStandards/search.cfm

[6] The online search of CDRH Guidance Documents can be found at www.fda.gov/cdrh/guidance.html

EXTENT OF STANDARD CONFORMANCE
SUMMARY REPORT TABLE

STANDARD TITLE

CONFORMANCE WITH STANDARD SECTIONS*

SECTION NUMBER	SECTION TITLE	CONFORMANCE? ☐ Yes ☐ No ☐ N/A
TYPE OF DEVIATION OR OPTION SELECTED*		
DESCRIPTION		
JUSTIFICATION		
SECTION NUMBER	SECTION TITLE	CONFORMANCE? ☐ Yes ☐ No ☐ N/A
TYPE OF DEVIATION OR OPTION SELECTED*		
DESCRIPTION		
JUSTIFICATION		
SECTION NUMBER	SECTION TITLE	CONFORMANCE? ☐ Yes ☐ No ☐ N/A
TYPE OF DEVIATION OR OPTION SELECTED*		
DESCRIPTION		
JUSTIFICATION		

* For completeness list all sections of the standard and indicate whether conformance is met. If a section is not applicable (N/A) an explanation is needed under "justification." Some standards include options, so similar to deviations, the option chosen needs to be described and adequately justified as appropriate for the subject device. Explanation of all deviations or description of options selected when following a standard is required under "type of deviation or option selected," "description" and "justification" on the report. More than one page may be necessary.

❖ Types of deviations can include an exclusion of a section in the standard, a deviation brought out by the FDA supplemental information sheet (SIS), a deviation to adapt the standard to the device, or any adaptation of a section.

Paperwork Reduction Act Statement

Public reporting burden for this collection of information is estimated to average 1 hour per response, including the time for reviewing instructions, searching existing data sources, gathering and maintaining the data needed, and completing and reviewing the collection of information. Send comments regarding this burden estimate or any other aspect of this collection of information, including suggestions for reducing this burden, to:

Center for Devices and Radiological Health
1350 Piccard Drive
Rockville, MD 20850

An agency may not conduct or sponsor, and a person is not required to respond to, a collection of information unless it displays a currently valid OMB control number.

Form Approved: OMB No. 0910-0120; Expiration Date: 8/31/10

Department of Health and Human Services

Food and Drug Administration

STANDARDS DATA REPORT FOR 510(K)S

(To be filled in by applicant)

This report and the Summary Report Table are to be completed by the applicant when submitting a 510(k) that references a national or international standard. A separate report is required for each standard referenced in the 510(k).

TYPE OF 510(K) SUBMISSION

☒ Traditional ☐ Special ☐ Abbreviated

STANDARD TITLE [1]

AAMI TIR 28, Product adoption and process equivalency for ethylene oxide sterilization

Please answer the following questions	*Yes*	*No*
Is this standard recognized by FDA [2]?	☐	☒
FDA Recognition number [3]	# _____	
Was a third party laboratory responsible for testing conformity of the device to this standard identified in the 510(k)?	☐	☒
Is a summary report [4] describing the extent of conformance of the standard used included in the 510(k)? If no, complete a summary report table.	☐	☒
Does the test data for this device demonstrate conformity to the requirements of this standard as it pertains to this device?	☒	☐
Does this standard include acceptance criteria? If no, include the results of testing in the 510(k).	☒	☐
Does this standard include more than one option or selection of the standard? If yes, report options selected in the summary report table.	☐	☒
Were there any deviations or adaptations made in the use of the standard?	☐	☒
If yes, were deviations in accordance with the FDA supplemental information sheet (SIS) [5]?	☐	☐
Were deviations or adaptations made beyond what is specified in the FDA SIS? If yes, report these deviations or adaptations in the summary report table.	☐	☒
Were there any exclusions from the standard? If yes, report these exclusions in the summary report table.	☐	☒
Is there an FDA guidance [6] that is associated with this standard?	☐	☒
If yes, was the guidance document followed in preparation of this 510k?	☐	☐

Title of guidance: _____

[1] The formatting convention for the title is: [SDO] [numeric identifier] [title of standard] [date of publication]

[2] Authority [21 U.S.C. 360d], www.fda.gov/cdrh/stdsprog.html

[3] http://www.accessdata.fda.gov/scripts/cdrh/cfdocs/cfStandards/search.cfm

[4] The summary report should include: any adaptations used to adapt to the device under review (for example, alternative test methods); choices made when options or a selection of methods are descr bed; deviations from the standard; requirements not applicable to the device; and the name address of the test laboratory or certification body involved in conformance assessment to this standard. The summary report includes information on all standards utilized during the development of the device.

[5] The supplemental information sheet (SIS) is additional information which is necessary before FDA recognizes the standard. Found at http:/www.accessdata.fda.gov/scripts/cdrh/cfdocs/cfStandards/search.cfm

[6] The online search of CDRH Guidance Documents can be found at www.fda.gov/cdrh/guidance.html

EXTENT OF STANDARD CONFORMANCE
SUMMARY REPORT TABLE

STANDARD TITLE

CONFORMANCE WITH STANDARD SECTIONS*

SECTION NUMBER

SECTION TITLE

CONFORMANCE? ☐ Yes ☐ No ☐ N/A

TYPE OF DEVIATION OR OPTION SELECTED❖

DESCRIPTION

JUSTIFICATION

SECTION NUMBER

SECTION TITLE

CONFORMANCE? ☐ Yes ☐ No ☐ N/A

TYPE OF DEVIATION OR OPTION SELECTED❖

DESCRIPTION

JUSTIFICATION

SECTION NUMBER

SECTION TITLE

CONFORMANCE? ☐ Yes ☐ No ☐ N/A

TYPE OF DEVIATION OR OPTION SELECTED❖

DESCRIPTION

JUSTIFICATION

* For completeness list all sections of the standard and indicate whether conformance is met. If a section is not applicable (N/A) an explanation is needed under “justification.” Some standards include options, so similar to deviations, the option chosen needs to be described and adequately justified as appropriate for the subject device. Explanation of all deviations or description of options selected when following a standard is required under “type of deviation or option selected,” “description” and “justification” on the report. More than one page may be necessary.

❖ Types of deviations can include an exclusion of a section in the standard, a deviation brought out by the FDA supplemental information sheet (SIS), a deviation to adapt the standard to the device, or any adaptation of a section.

Paperwork Reduction Act Statement

Public reporting burden for this collection of information is estimated to average 1 hour per response, including the time for reviewing instructions, searching existing data sources, gathering and maintaining the data needed, and completing and reviewing the collection of information. Send comments regarding this burden estimate or any other aspect of this collection of information, including suggestions for reducing this burden, to:

Center for Devices and Radiological Health
1350 Piccard Drive
Rockville, MD 20850

An agency may not conduct or sponsor, and a person is not required to respond to, a collection of information unless it displays a currently valid OMB control number.

Form Approved: OMB No. 0910-0120; Expiration Date: 8/31/10

Department of Health and Human Services

Food and Drug Administration

STANDARDS DATA REPORT FOR 510(K)S

(To be filled in by applicant)

This report and the Summary Report Table are to be completed by the applicant when submitting a 510(k) that references a national or international standard. A separate report is required for each standard referenced in the 510(k).

TYPE OF 510(K) SUBMISSION

☒ Traditional ☐ Special ☐ Abbreviated

STANDARD TITLE [1]

ASTM - F1980-02, Standard for Accelerated Aging of Sterile Medical Device Packages

Please answer the following questions	*Yes*	*No*
Is this standard recognized by FDA [2]?	☐	☒
FDA Recognition number [3]	# _____	
Was a third party laboratory responsible for testing conformity of the device to this standard identified in the 510(k)?	☐	☒
Is a summary report [4] describing the extent of conformance of the standard used included in the 510(k)? If no, complete a summary report table.	☐	☒
Does the test data for this device demonstrate conformity to the requirements of this standard as it pertains to this device?	☒	☐
Does this standard include acceptance criteria? If no, include the results of testing in the 510(k).	☒	☐
Does this standard include more than one option or selection of the standard? If yes, report options selected in the summary report table.	☐	☒
Were there any deviations or adaptations made in the use of the standard?	☐	☒
If yes, were deviations in accordance with the FDA supplemental information sheet (SIS) [5]?	☐	☐
Were deviations or adaptations made beyond what is specified in the FDA SIS? If yes, report these deviations or adaptations in the summary report table.	☐	☒
Were there any exclusions from the standard? If yes, report these exclusions in the summary report table.	☐	☒
Is there an FDA guidance [6] that is associated with this standard?	☐	☒
If yes, was the guidance document followed in preparation of this 510k?	☐	☐

Title of guidance: _____

[1] The formatting convention for the title is: [SDO] [numeric identifier] [title of standard] [date of publication]

[2] Authority [21 U.S.C. 360d], www.fda.gov/cdrh/stdsprog.html

[3] http://www.accessdata.fda.gov/scripts/cdrh/cfdocs/cfStandards/search.cfm

[4] The summary report should include: any adaptations used to adapt to the device under review (for example, alternative test methods); choices made when options or a selection of methods are descr bed; deviations from the standard; requirements not applicable to the device; and the name address of the test laboratory or certification body involved in conformance assessment to this standard. The summary report includes information on all standards utilized during the development of the device.

[5] The supplemental information sheet (SIS) is additional information which is necessary before FDA recognizes the standard. Found at http:/www.accessdata.fda.gov/scripts/cdrh/cfdocs/cfStandards/search.cfm

[6] The online search of CDRH Guidance Documents can be found at www.fda.gov/cdrh/guidance.html

EXTENT OF STANDARD CONFORMANCE
SUMMARY REPORT TABLE

STANDARD TITLE

CONFORMANCE WITH STANDARD SECTIONS*

SECTION NUMBER	SECTION TITLE	CONFORMANCE? ☐ Yes ☐ No ☐ N/A

TYPE OF DEVIATION OR OPTION SELECTED❖

DESCRIPTION

JUSTIFICATION

SECTION NUMBER	SECTION TITLE	CONFORMANCE? ☐ Yes ☐ No ☐ N/A

TYPE OF DEVIATION OR OPTION SELECTED❖

DESCRIPTION

JUSTIFICATION

SECTION NUMBER	SECTION TITLE	CONFORMANCE? ☐ Yes ☐ No ☐ N/A

TYPE OF DEVIATION OR OPTION SELECTED❖

DESCRIPTION

JUSTIFICATION

* For completeness list all sections of the standard and indicate whether conformance is met. If a section is not applicable (N/A) an explanation is needed under "justification." Some standards include options, so similar to deviations, the option chosen needs to be described and adequately justified as appropriate for the subject device. Explanation of all deviations or description of options selected when following a standard is required under "type of deviation or option selected," "description" and "justification" on the report. More than one page may be necessary.

❖ Types of deviations can include an exclusion of a section in the standard, a deviation brought out by the FDA supplemental information sheet (SIS), a deviation to adapt the standard to the device, or any adaptation of a section.

Paperwork Reduction Act Statement

Public reporting burden for this collection of information is estimated to average 1 hour per response, including the time for reviewing instructions, searching existing data sources, gathering and maintaining the data needed, and completing and reviewing the collection of information. Send comments regarding this burden estimate or any other aspect of this collection of information, including suggestions for reducing this burden, to:

Center for Devices and Radiological Health
1350 Piccard Drive
Rockville, MD 20850

An agency may not conduct or sponsor, and a person is not required to respond to, a collection of information unless it displays a currently valid OMB control number.

Form Approved: OMB No. 0910-0120; Expiration Date: 8/31/10

Department of Health and Human Services

Food and Drug Administration

STANDARDS DATA REPORT FOR 510(K)S

(To be filled in by applicant)

This report and the Summary Report Table are to be completed by the applicant when submitting a 510(k) that references a national or international standard. A separate report is required for each standard referenced in the 510(k).

TYPE OF 510(K) SUBMISSION

☒ Traditional ☐ Special ☐ Abbreviated

STANDARD TITLE [1]

I10993-7, Biological Evaluation of Medical Devices - Part 7: Ethylene Oxide Sterilization Residuals

Please answer the following questions	*Yes*	*No*
Is this standard recognized by FDA [2]?	☒	☐
FDA Recognition number [3]	# 14-193	
Was a third party laboratory responsible for testing conformity of the device to this standard identified in the 510(k)?	☒	☐
Is a summary report [4] describing the extent of conformance of the standard used included in the 510(k)? If no, complete a summary report table.	☐	☒
Does the test data for this device demonstrate conformity to the requirements of this standard as it pertains to this device?	☒	☐
Does this standard include acceptance criteria? If no, include the results of testing in the 510(k).	☒	☐
Does this standard include more than one option or selection of the standard? If yes, report options selected in the summary report table.	☐	☒
Were there any deviations or adaptations made in the use of the standard?	☐	☒
If yes, were deviations in accordance with the FDA supplemental information sheet (SIS) [5]?	☐	☐
Were deviations or adaptations made beyond what is specified in the FDA SIS? If yes, report these deviations or adaptations in the summary report table.	☐	☒
Were there any exclusions from the standard? If yes, report these exclusions in the summary report table.	☐	☒
Is there an FDA guidance [6] that is associated with this standard?	☐	☒
If yes, was the guidance document followed in preparation of this 510k?	☐	☐

Title of guidance: _____

[1] The formatting convention for the title is: [SDO] [numeric identifier] [title of standard] [date of publication]

[2] Authority [21 U.S.C. 360d], www.fda.gov/cdrh/stdsprog.html

[3] http://www.accessdata.fda.gov/scripts/cdrh/cfdocs/cfStandards/search.cfm

[4] The summary report should include: any adaptations used to adapt to the device under review (for example, alternative test methods); choices made when options or a selection of methods are descr bed; deviations from the standard; requirements not applicable to the device; and the name address of the test laboratory or certification body involved in conformance assessment to this standard. The summary report includes information on all standards utilized during the development of the device.

[5] The supplemental information sheet (SIS) is additional information which is necessary before FDA recognizes the standard. Found at http:/www.accessdata.fda.gov/scripts/cdrh/cfdocs/cfStandards/search.cfm

[6] The online search of CDRH Guidance Documents can be found at www.fda.gov/cdrh/guidance.html

EXTENT OF STANDARD CONFORMANCE
SUMMARY REPORT TABLE

STANDARD TITLE

CONFORMANCE WITH STANDARD SECTIONS*

SECTION NUMBER	SECTION TITLE	CONFORMANCE? ☐ Yes ☐ No ☐ N/A

TYPE OF DEVIATION OR OPTION SELECTED❖

DESCRIPTION

JUSTIFICATION

SECTION NUMBER	SECTION TITLE	CONFORMANCE? ☐ Yes ☐ No ☐ N/A

TYPE OF DEVIATION OR OPTION SELECTED❖

DESCRIPTION

JUSTIFICATION

SECTION NUMBER	SECTION TITLE	CONFORMANCE? ☐ Yes ☐ No ☐ N/A

TYPE OF DEVIATION OR OPTION SELECTED❖

DESCRIPTION

JUSTIFICATION

* For completeness list all sections of the standard and indicate whether conformance is met. If a section is not applicable (N/A) an explanation is needed under “justification.” Some standards include options, so similar to deviations, the option chosen needs to be described and adequately justified as appropriate for the subject device. Explanation of all deviations or description of options selected when following a standard is required under “type of deviation or option selected,” “description” and “justification” on the report. More than one page may be necessary.

❖ Types of deviations can include an exclusion of a section in the standard, a deviation brought out by the FDA supplemental information sheet (SIS), a deviation to adapt the standard to the device, or any adaptation of a section.

Paperwork Reduction Act Statement

Public reporting burden for this collection of information is estimated to average 1 hour per response, including the time for reviewing instructions, searching existing data sources, gathering and maintaining the data needed, and completing and reviewing the collection of information. Send comments regarding this burden estimate or any other aspect of this collection of information, including suggestions for reducing this burden, to:

Center for Devices and Radiological Health
1350 Piccard Drive
Rockville, MD 20850

An agency may not conduct or sponsor, and a person is not required to respond to, a collection of information unless it displays a currently valid OMB control number.

Form Approved: OMB No. 0910-0120; Expiration Date: 8/31/10

Department of Health and Human Services

Food and Drug Administration

STANDARDS DATA REPORT FOR 510(K)S

(To be filled in by applicant)

This report and the Summary Report Table are to be completed by the applicant when submitting a 510(k) that references a national or international standard. A separate report is required for each standard referenced in the 510(k).

TYPE OF 510(K) SUBMISSION

☒ Traditional ☐ Special ☐ Abbreviated

STANDARD TITLE [1]

ISO 10993-5, Biological Evaluation of Medical Devices – Part 5: Tests for InVitro Cytotoxicity

Please answer the following questions	*Yes*	*No*
Is this standard recognized by FDA [2]?	☒	☐
FDA Recognition number [3]	# 2-153	
Was a third party laboratory responsible for testing conformity of the device to this standard identified in the 510(k)?	☒	☐
Is a summary report [4] describing the extent of conformance of the standard used included in the 510(k)? If no, complete a summary report table.	☐	☒
Does the test data for this device demonstrate conformity to the requirements of this standard as it pertains to this device?	☒	☐
Does this standard include acceptance criteria? If no, include the results of testing in the 510(k).	☒	☐
Does this standard include more than one option or selection of the standard? If yes, report options selected in the summary report table.	☐	☒
Were there any deviations or adaptations made in the use of the standard?	☐	☒
If yes, were deviations in accordance with the FDA supplemental information sheet (SIS) [5]?	☐	☐
Were deviations or adaptations made beyond what is specified in the FDA SIS? If yes, report these deviations or adaptations in the summary report table.	☐	☒
Were there any exclusions from the standard? If yes, report these exclusions in the summary report table.	☐	☒
Is there an FDA guidance [6] that is associated with this standard?	☐	☒
If yes, was the guidance document followed in preparation of this 510k?	☐	☐

Title of guidance: _____

[1] The formatting convention for the title is: [SDO] [numeric identifier] [title of standard] [date of publication]

[2] Authority [21 U.S.C. 360d], www.fda.gov/cdrh/stdsprog.html

[3] http://www.accessdata.fda.gov/scripts/cdrh/cfdocs/cfStandards/search.cfm

[4] The summary report should include: any adaptations used to adapt to the device under review (for example, alternative test methods); choices made when options or a selection of methods are descr bed; deviations from the standard; requirements not applicable to the device; and the name address of the test laboratory or certification body involved in conformance assessment to this standard. The summary report includes information on all standards utilized during the development of the device.

[5] The supplemental information sheet (SIS) is additional information which is necessary before FDA recognizes the standard. Found at http:/www.accessdata.fda.gov/scripts/cdrh/cfdocs/cfStandards/search.cfm

[6] The online search of CDRH Guidance Documents can be found at www.fda.gov/cdrh/guidance.html

EXTENT OF STANDARD CONFORMANCE
SUMMARY REPORT TABLE

STANDARD TITLE

CONFORMANCE WITH STANDARD SECTIONS*

SECTION NUMBER	SECTION TITLE	CONFORMANCE? ☐ Yes ☐ No ☐ N/A

TYPE OF DEVIATION OR OPTION SELECTED❖

DESCRIPTION

JUSTIFICATION

SECTION NUMBER	SECTION TITLE	CONFORMANCE? ☐ Yes ☐ No ☐ N/A

TYPE OF DEVIATION OR OPTION SELECTED❖

DESCRIPTION

JUSTIFICATION

SECTION NUMBER	SECTION TITLE	CONFORMANCE? ☐ Yes ☐ No ☐ N/A

TYPE OF DEVIATION OR OPTION SELECTED❖

DESCRIPTION

JUSTIFICATION

* For completeness list all sections of the standard and indicate whether conformance is met. If a section is not applicable (N/A) an explanation is needed under "justification." Some standards include options, so similar to deviations, the option chosen needs to be described and adequately justified as appropriate for the subject device. Explanation of all deviations or description of options selected when following a standard is required under "type of deviation or option selected," "description" and "justification" on the report. More than one page may be necessary.

❖ Types of deviations can include an exclusion of a section in the standard, a deviation brought out by the FDA supplemental information sheet (SIS), a deviation to adapt the standard to the device, or any adaptation of a section.

Paperwork Reduction Act Statement

Public reporting burden for this collection of information is estimated to average 1 hour per response, including the time for reviewing instructions, searching existing data sources, gathering and maintaining the data needed, and completing and reviewing the collection of information. Send comments regarding this burden estimate or any other aspect of this collection of information, including suggestions for reducing this burden, to:

Center for Devices and Radiological Health
1350 Piccard Drive
Rockville, MD 20850

An agency may not conduct or sponsor, and a person is not required to respond to, a collection of information unless it displays a currently valid OMB control number.

Form Approved: OMB No. 0910-0120; Expiration Date: 8/31/10

Department of Health and Human Services

Food and Drug Administration

STANDARDS DATA REPORT FOR 510(K)S

(To be filled in by applicant)

This report and the Summary Report Table are to be completed by the applicant when submitting a 510(k) that references a national or international standard. A separate report is required for each standard referenced in the 510(k).

TYPE OF 510(K) SUBMISSION

☒ Traditional ☐ Special ☐ Abbreviated

STANDARD TITLE [1]

ISO 10993-10, Biological evaluation of medical devices - Part 10: Tests for irritation and delayed-type hypersensitivity

Please answer the following questions	*Yes*	*No*
Is this standard recognized by FDA [2]?	☒	☐
FDA Recognition number [3]	# 2-152	
Was a third party laboratory responsible for testing conformity of the device to this standard identified in the 510(k)?	☒	☐
Is a summary report [4] describing the extent of conformance of the standard used included in the 510(k)? If no, complete a summary report table.	☐	☒
Does the test data for this device demonstrate conformity to the requirements of this standard as it pertains to this device?	☒	☐
Does this standard include acceptance criteria? If no, include the results of testing in the 510(k).	☒	☐
Does this standard include more than one option or selection of the standard? If yes, report options selected in the summary report table.	☐	☒
Were there any deviations or adaptations made in the use of the standard?	☐	☒
If yes, were deviations in accordance with the FDA supplemental information sheet (SIS) [5]?	☐	☐
Were deviations or adaptations made beyond what is specified in the FDA SIS? If yes, report these deviations or adaptations in the summary report table.	☐	☒
Were there any exclusions from the standard? If yes, report these exclusions in the summary report table.	☐	☒
Is there an FDA guidance [6] that is associated with this standard?	☐	☒
If yes, was the guidance document followed in preparation of this 510k?	☐	☐

Title of guidance: _____

[1] The formatting convention for the title is: [SDO] [numeric identifier] [title of standard] [date of publication]

[2] Authority [21 U.S.C. 360d], www.fda.gov/cdrh/stdsprog.html

[3] http://www.accessdata.fda.gov/scripts/cdrh/cfdocs/cfStandards/search.cfm

[4] The summary report should include: any adaptations used to adapt to the device under review (for example, alternative test methods); choices made when options or a selection of methods are descr bed; deviations from the standard; requirements not applicable to the device; and the name address of the test laboratory or certification body involved in conformance assessment to this standard. The summary report includes information on all standards utilized during the development of the device.

[5] The supplemental information sheet (SIS) is additional information which is necessary before FDA recognizes the standard. Found at http:/www.accessdata.fda.gov/scripts/cdrh/cfdocs/cfStandards/search.cfm

[6] The online search of CDRH Guidance Documents can be found at www.fda.gov/cdrh/guidance.html

EXTENT OF STANDARD CONFORMANCE
SUMMARY REPORT TABLE

STANDARD TITLE

CONFORMANCE WITH STANDARD SECTIONS*

SECTION NUMBER	SECTION TITLE	CONFORMANCE? ☐ Yes ☐ No ☐ N/A

TYPE OF DEVIATION OR OPTION SELECTED❖

DESCRIPTION

JUSTIFICATION

SECTION NUMBER	SECTION TITLE	CONFORMANCE? ☐ Yes ☐ No ☐ N/A

TYPE OF DEVIATION OR OPTION SELECTED❖

DESCRIPTION

JUSTIFICATION

SECTION NUMBER	SECTION TITLE	CONFORMANCE? ☐ Yes ☐ No ☐ N/A

TYPE OF DEVIATION OR OPTION SELECTED❖

DESCRIPTION

JUSTIFICATION

* For completeness list all sections of the standard and indicate whether conformance is met. If a section is not applicable (N/A) an explanation is needed under "justification." Some standards include options, so similar to deviations, the option chosen needs to be described and adequately justified as appropriate for the subject device. Explanation of all deviations or description of options selected when following a standard is required under "type of deviation or option selected," "description" and "justification" on the report. More than one page may be necessary.

❖ Types of deviations can include an exclusion of a section in the standard, a deviation brought out by the FDA supplemental information sheet (SIS), a deviation to adapt the standard to the device, or any adaptation of a section.

Paperwork Reduction Act Statement

Public reporting burden for this collection of information is estimated to average 1 hour per response, including the time for reviewing instructions, searching existing data sources, gathering and maintaining the data needed, and completing and reviewing the collection of information. Send comments regarding this burden estimate or any other aspect of this collection of information, including suggestions for reducing this burden, to:

Center for Devices and Radiological Health
1350 Piccard Drive
Rockville, MD 20850

An agency may not conduct or sponsor, and a person is not required to respond to, a collection of information unless it displays a currently valid OMB control number.

Form Approved: OMB No. 0910-0120; Expiration Date: 8/31/10

Department of Health and Human Services

Food and Drug Administration

STANDARDS DATA REPORT FOR 510(K)S

(To be filled in by applicant)

This report and the Summary Report Table are to be completed by the applicant when submitting a 510(k) that references a national or international standard. A separate report is required for each standard referenced in the 510(k).

TYPE OF 510(K) SUBMISSION

☒ Traditional ☐ Special ☐ Abbreviated

STANDARD TITLE [1]

ISO 10993-12, Biological evaluation of medical devices -- Part 12: Sample preparation and reference materials

Please answer the following questions	*Yes*	*No*
Is this standard recognized by FDA [2]?	☒	☐
FDA Recognition number [3]	# 2-135	
Was a third party laboratory responsible for testing conformity of the device to this standard identified in the 510(k)?	☒	☐
Is a summary report [4] describing the extent of conformance of the standard used included in the 510(k)? If no, complete a summary report table.	☐	☒
Does the test data for this device demonstrate conformity to the requirements of this standard as it pertains to this device?	☒	☐
Does this standard include acceptance criteria? If no, include the results of testing in the 510(k).	☒	☐
Does this standard include more than one option or selection of the standard? If yes, report options selected in the summary report table.	☐	☒
Were there any deviations or adaptations made in the use of the standard?	☐	☒
If yes, were deviations in accordance with the FDA supplemental information sheet (SIS) [5]?	☐	☐
Were deviations or adaptations made beyond what is specified in the FDA SIS? If yes, report these deviations or adaptations in the summary report table.	☐	☒
Were there any exclusions from the standard? If yes, report these exclusions in the summary report table.	☐	☒
Is there an FDA guidance [6] that is associated with this standard?	☐	☒
If yes, was the guidance document followed in preparation of this 510k?	☐	☐

Title of guidance: _____

[1] The formatting convention for the title is: [SDO] [numeric identifier] [title of standard] [date of publication]

[2] Authority [21 U.S.C. 360d], www.fda.gov/cdrh/stdsprog.html

[3] http://www.accessdata.fda.gov/scripts/cdrh/cfdocs/cfStandards/search.cfm

[4] The summary report should include: any adaptations used to adapt to the device under review (for example, alternative test methods); choices made when options or a selection of methods are descr bed; deviations from the standard; requirements not applicable to the device; and the name address of the test laboratory or certification body involved in conformance assessment to this standard. The summary report includes information on all standards utilized during the development of the device.

[5] The supplemental information sheet (SIS) is additional information which is necessary before FDA recognizes the standard. Found at http:/www.accessdata.fda.gov/scripts/cdrh/cfdocs/cfStandards/search.cfm

[6] The online search of CDRH Guidance Documents can be found at www.fda.gov/cdrh/guidance.html

EXTENT OF STANDARD CONFORMANCE
SUMMARY REPORT TABLE

STANDARD TITLE

CONFORMANCE WITH STANDARD SECTIONS*

SECTION NUMBER	SECTION TITLE	CONFORMANCE? ☐ Yes ☐ No ☐ N/A
TYPE OF DEVIATION OR OPTION SELECTED*		
DESCRIPTION		
JUSTIFICATION		
SECTION NUMBER	SECTION TITLE	CONFORMANCE? ☐ Yes ☐ No ☐ N/A
TYPE OF DEVIATION OR OPTION SELECTED*		
DESCRIPTION		
JUSTIFICATION		
SECTION NUMBER	SECTION TITLE	CONFORMANCE? ☐ Yes ☐ No ☐ N/A
TYPE OF DEVIATION OR OPTION SELECTED*		
DESCRIPTION		
JUSTIFICATION		

* For completeness list all sections of the standard and indicate whether conformance is met. If a section is not applicable (N/A) an explanation is needed under "justification." Some standards include options, so similar to deviations, the option chosen needs to be described and adequately justified as appropriate for the subject device. Explanation of all deviations or description of options selected when following a standard is required under "type of deviation or option selected," "description" and "justification" on the report. More than one page may be necessary.

* Types of deviations can include an exclusion of a section in the standard, a deviation brought out by the FDA supplemental information sheet (SIS), a deviation to adapt the standard to the device, or any adaptation of a section.

Paperwork Reduction Act Statement

Public reporting burden for this collection of information is estimated to average 1 hour per response, including the time for reviewing instructions, searching existing data sources, gathering and maintaining the data needed, and completing and reviewing the collection of information. Send comments regarding this burden estimate or any other aspect of this collection of information, including suggestions for reducing this burden, to:

Center for Devices and Radiological Health
1350 Piccard Drive
Rockville, MD 20850

An agency may not conduct or sponsor, and a person is not required to respond to, a collection of information unless it displays a currently valid OMB control number.

Form Approved: OMB No. 0910-0120; Expiration Date: 8/31/10

Department of Health and Human Services

Food and Drug Administration

STANDARDS DATA REPORT FOR 510(K)S

(To be filled in by applicant)

This report and the Summary Report Table are to be completed by the applicant when submitting a 510(k) that references a national or international standard. A separate report is required for each standard referenced in the 510(k).

TYPE OF 510(K) SUBMISSION

☒ Traditional ☐ Special ☐ Abbreviated

STANDARD TITLE [1]

EN 980, Graphical Symbols for use in the labeling of medical devices

Please answer the following questions	*Yes*	*No*
Is this standard recognized by FDA [2]?	☐	☒
FDA Recognition number [3] # _____		
Was a third party laboratory responsible for testing conformity of the device to this standard identified in the 510(k)?	☐	☒
Is a summary report [4] describing the extent of conformance of the standard used included in the 510(k)? If no, complete a summary report table.	☒	☐
Does the test data for this device demonstrate conformity to the requirements of this standard as it pertains to this device?	☒	☐
Does this standard include acceptance criteria? If no, include the results of testing in the 510(k).	☒	☐
Does this standard include more than one option or selection of the standard? If yes, report options selected in the summary report table.	☐	☒
Were there any deviations or adaptations made in the use of the standard?	☐	☒
If yes, were deviations in accordance with the FDA supplemental information sheet (SIS) [5]?	☐	☐
Were deviations or adaptations made beyond what is specified in the FDA SIS? If yes, report these deviations or adaptations in the summary report table.	☐	☒
Were there any exclusions from the standard? If yes, report these exclusions in the summary report table.	☐	☒
Is there an FDA guidance [6] that is associated with this standard?	☐	☒
If yes, was the guidance document followed in preparation of this 510k?	☐	☐

Title of guidance: _____

[1] The formatting convention for the title is: [SDO] [numeric identifier] [title of standard] [date of publication]

[2] Authority [21 U.S.C. 360d], www.fda.gov/cdrh/stdsprog.html

[3] http://www.accessdata.fda.gov/scripts/cdrh/cfdocs/cfStandards/search.cfm

[4] The summary report should include: any adaptations used to adapt to the device under review (for example, alternative test methods); choices made when options or a selection of methods are descr bed; deviations from the standard; requirements not applicable to the device; and the name address of the test laboratory or certification body involved in conformance assessment to this standard. The summary report includes information on all standards utilized during the development of the device.

[5] The supplemental information sheet (SIS) is additional information which is necessary before FDA recognizes the standard. Found at http:/www.accessdata.fda.gov/scripts/cdrh/cfdocs/cfStandards/search.cfm

[6] The online search of CDRH Guidance Documents can be found at www.fda.gov/cdrh/guidance.html

EXTENT OF STANDARD CONFORMANCE
SUMMARY REPORT TABLE

STANDARD TITLE

CONFORMANCE WITH STANDARD SECTIONS*

SECTION NUMBER	SECTION TITLE	CONFORMANCE? ☐ Yes ☐ No ☐ N/A

TYPE OF DEVIATION OR OPTION SELECTED*

DESCRIPTION

JUSTIFICATION

SECTION NUMBER	SECTION TITLE	CONFORMANCE? ☐ Yes ☐ No ☐ N/A

TYPE OF DEVIATION OR OPTION SELECTED*

DESCRIPTION

JUSTIFICATION

SECTION NUMBER	SECTION TITLE	CONFORMANCE? ☐ Yes ☐ No ☐ N/A

TYPE OF DEVIATION OR OPTION SELECTED*

DESCRIPTION

JUSTIFICATION

* For completeness list all sections of the standard and indicate whether conformance is met. If a section is not applicable (N/A) an explanation is needed under "justification." Some standards include options, so similar to deviations, the option chosen needs to be described and adequately justified as appropriate for the subject device. Explanation of all deviations or description of options selected when following a standard is required under "type of deviation or option selected," "description" and "justification" on the report. More than one page may be necessary.

❖ Types of deviations can include an exclusion of a section in the standard, a deviation brought out by the FDA supplemental information sheet (SIS), a deviation to adapt the standard to the device, or any adaptation of a section.

Paperwork Reduction Act Statement

Public reporting burden for this collection of information is estimated to average 1 hour per response, including the time for reviewing instructions, searching existing data sources, gathering and maintaining the data needed, and completing and reviewing the collection of information. Send comments regarding this burden estimate or any other aspect of this collection of information, including suggestions for reducing this burden, to:

Center for Devices and Radiological Health
1350 Piccard Drive
Rockville, MD 20850

An agency may not conduct or sponsor, and a person is not required to respond to, a collection of information unless it displays a currently valid OMB control number.

Form Approved: OMB No. 0910-0120; Expiration Date: 8/31/10

Department of Health and Human Services

Food and Drug Administration

STANDARDS DATA REPORT FOR 510(K)S

(To be filled in by applicant)

This report and the Summary Report Table are to be completed by the applicant when submitting a 510(k) that references a national or international standard. A separate report is required for each standard referenced in the 510(k).

TYPE OF 510(K) SUBMISSION

☒ Traditional ☐ Special ☐ Abbreviated

STANDARD TITLE [1]

ISO 7000, Graphical symbols for use on equipment

Please answer the following questions	*Yes*	*No*
Is this standard recognized by FDA [2]?	☐	☒
FDA Recognition number [3]	# _____	
Was a third party laboratory responsible for testing conformity of the device to this standard identified in the 510(k)?	☐	☒
Is a summary report [4] describing the extent of conformance of the standard used included in the 510(k)? If no, complete a summary report table.	☐	☒
Does the test data for this device demonstrate conformity to the requirements of this standard as it pertains to this device?	☒	☐
Does this standard include acceptance criteria? If no, include the results of testing in the 510(k).	☒	☐
Does this standard include more than one option or selection of the standard? If yes, report options selected in the summary report table.	☐	☒
Were there any deviations or adaptations made in the use of the standard?	☐	☒
If yes, were deviations in accordance with the FDA supplemental information sheet (SIS) [5]?	☐	☐
Were deviations or adaptations made beyond what is specified in the FDA SIS? If yes, report these deviations or adaptations in the summary report table.	☐	☒
Were there any exclusions from the standard? If yes, report these exclusions in the summary report table.	☐	☒
Is there an FDA guidance [6] that is associated with this standard?	☐	☒
If yes, was the guidance document followed in preparation of this 510k?	☐	☐

Title of guidance: _____

[1] The formatting convention for the title is: [SDO] [numeric identifier] [title of standard] [date of publication]

[2] Authority [21 U.S.C. 360d], www.fda.gov/cdrh/stdsprog.html

[3] http://www.accessdata.fda.gov/scripts/cdrh/cfdocs/cfStandards/search.cfm

[4] The summary report should include: any adaptations used to adapt to the device under review (for example, alternative test methods); choices made when options or a selection of methods are descr bed; deviations from the standard; requirements not applicable to the device; and the name address of the test laboratory or certification body involved in conformance assessment to this standard. The summary report includes information on all standards utilized during the development of the device.

[5] The supplemental information sheet (SIS) is additional information which is necessary before FDA recognizes the standard. Found at http:/www.accessdata.fda.gov/scripts/cdrh/cfdocs/cfStandards/search.cfm

[6] The online search of CDRH Guidance Documents can be found at www.fda.gov/cdrh/guidance.html

EXTENT OF STANDARD CONFORMANCE
SUMMARY REPORT TABLE

STANDARD TITLE

CONFORMANCE WITH STANDARD SECTIONS*

SECTION NUMBER	SECTION TITLE	CONFORMANCE? ☐ Yes ☐ No ☐ N/A
TYPE OF DEVIATION OR OPTION SELECTED❖		
DESCRIPTION		
JUSTIFICATION		

SECTION NUMBER	SECTION TITLE	CONFORMANCE? ☐ Yes ☐ No ☐ N/A
TYPE OF DEVIATION OR OPTION SELECTED❖		
DESCRIPTION		
JUSTIFICATION		

SECTION NUMBER	SECTION TITLE	CONFORMANCE? ☐ Yes ☐ No ☐ N/A
TYPE OF DEVIATION OR OPTION SELECTED❖		
DESCRIPTION		
JUSTIFICATION		

* For completeness list all sections of the standard and indicate whether conformance is met. If a section is not applicable (N/A) an explanation is needed under "justification." Some standards include options, so similar to deviations, the option chosen needs to be described and adequately justified as appropriate for the subject device. Explanation of all deviations or description of options selected when following a standard is required under "type of deviation or option selected," "description" and "justification" on the report. More than one page may be necessary.

❖ Types of deviations can include an exclusion of a section in the standard, a deviation brought out by the FDA supplemental information sheet (SIS), a deviation to adapt the standard to the device, or any adaptation of a section.

Paperwork Reduction Act Statement

Public reporting burden for this collection of information is estimated to average 1 hour per response, including the time for reviewing instructions, searching existing data sources, gathering and maintaining the data needed, and completing and reviewing the collection of information. Send comments regarding this burden estimate or any other aspect of this collection of information, including suggestions for reducing this burden, to:

Center for Devices and Radiological Health
1350 Piccard Drive
Rockville, MD 20850

An agency may not conduct or sponsor, and a person is not required to respond to, a collection of information unless it displays a currently valid OMB control number.

Form Approved: OMB No. 0910-0120; Expiration Date: 8/31/10

Department of Health and Human Services

Food and Drug Administration

STANDARDS DATA REPORT FOR 510(K)S

(To be filled in by applicant)

This report and the Summary Report Table are to be completed by the applicant when submitting a 510(k) that references a national or international standard. A separate report is required for each standard referenced in the 510(k).

TYPE OF 510(K) SUBMISSION

☒ Traditional ☐ Special ☐ Abbreviated

STANDARD TITLE [1]

EN 60417, Graphical Symbols for use in the labeling of medical devices

Please answer the following questions	*Yes*	*No*
Is this standard recognized by FDA [2]?	☐	☒
FDA Recognition number [3]	# _____	
Was a third party laboratory responsible for testing conformity of the device to this standard identified in the 510(k)?	☐	☒
Is a summary report [4] describing the extent of conformance of the standard used included in the 510(k)? If no, complete a summary report table.	☐	☒
Does the test data for this device demonstrate conformity to the requirements of this standard as it pertains to this device?	☒	☐
Does this standard include acceptance criteria? If no, include the results of testing in the 510(k).	☒	☐
Does this standard include more than one option or selection of the standard? If yes, report options selected in the summary report table.	☐	☒
Were there any deviations or adaptations made in the use of the standard?	☐	☒
If yes, were deviations in accordance with the FDA supplemental information sheet (SIS) [5]?	☐	☐
Were deviations or adaptations made beyond what is specified in the FDA SIS? If yes, report these deviations or adaptations in the summary report table.	☐	☒
Were there any exclusions from the standard? If yes, report these exclusions in the summary report table.	☐	☒
Is there an FDA guidance [6] that is associated with this standard?	☐	☒
If yes, was the guidance document followed in preparation of this 510k?	☐	☐

Title of guidance: _____

[1] The formatting convention for the title is: [SDO] [numeric identifier] [title of standard] [date of publication]

[2] Authority [21 U.S.C. 360d], www.fda.gov/cdrh/stdsprog.html

[3] http://www.accessdata.fda.gov/scripts/cdrh/cfdocs/cfStandards/search.cfm

[4] The summary report should include: any adaptations used to adapt to the device under review (for example, alternative test methods); choices made when options or a selection of methods are descr bed; deviations from the standard; requirements not applicable to the device; and the name address of the test laboratory or certification body involved in conformance assessment to this standard. The summary report includes information on all standards utilized during the development of the device.

[5] The supplemental information sheet (SIS) is additional information which is necessary before FDA recognizes the standard. Found at http:/www.accessdata.fda.gov/scripts/cdrh/cfdocs/cfStandards/search.cfm

[6] The online search of CDRH Guidance Documents can be found at www.fda.gov/cdrh/guidance.html

EXTENT OF STANDARD CONFORMANCE
SUMMARY REPORT TABLE

STANDARD TITLE

CONFORMANCE WITH STANDARD SECTIONS*

SECTION NUMBER	SECTION TITLE	CONFORMANCE? ☐ Yes ☐ No ☐ N/A

TYPE OF DEVIATION OR OPTION SELECTED❖

DESCRIPTION

JUSTIFICATION

SECTION NUMBER	SECTION TITLE	CONFORMANCE? ☐ Yes ☐ No ☐ N/A

TYPE OF DEVIATION OR OPTION SELECTED❖

DESCRIPTION

JUSTIFICATION

SECTION NUMBER	SECTION TITLE	CONFORMANCE? ☐ Yes ☐ No ☐ N/A

TYPE OF DEVIATION OR OPTION SELECTED❖

DESCRIPTION

JUSTIFICATION

* For completeness list all sections of the standard and indicate whether conformance is met. If a section is not applicable (N/A) an explanation is needed under "justification." Some standards include options, so similar to deviations, the option chosen needs to be described and adequately justified as appropriate for the subject device. Explanation of all deviations or description of options selected when following a standard is required under "type of deviation or option selected," "description" and "justification" on the report. More than one page may be necessary.

❖ Types of deviations can include an exclusion of a section in the standard, a deviation brought out by the FDA supplemental information sheet (SIS), a deviation to adapt the standard to the device, or any adaptation of a section.

Paperwork Reduction Act Statement

Public reporting burden for this collection of information is estimated to average 1 hour per response, including the time for reviewing instructions, searching existing data sources, gathering and maintaining the data needed, and completing and reviewing the collection of information. Send comments regarding this burden estimate or any other aspect of this collection of information, including suggestions for reducing this burden, to:

Center for Devices and Radiological Health
1350 Piccard Drive
Rockville, MD 20850

An agency may not conduct or sponsor, and a person is not required to respond to, a collection of information unless it displays a currently valid OMB control number.

Form Approved: OMB No. 0910-0120; Expiration Date: 8/31/10

Department of Health and Human Services

Food and Drug Administration

STANDARDS DATA REPORT FOR 510(K)S

(To be filled in by applicant)

This report and the Summary Report Table are to be completed by the applicant when submitting a 510(k) that references a national or international standard. A separate report is required for each standard referenced in the 510(k).

TYPE OF 510(K) SUBMISSION

☒ Traditional ☐ Special ☐ Abbreviated

STANDARD TITLE [1]

IIEC 60601-1-2, Medical Electrical Equipment - Part 1-2: General Requirements for Safety - Collateral Standard: Electromagnetic Compatibility - Requirements and Tests

Please answer the following questions	*Yes*	*No*
Is this standard recognized by FDA [2]?	☒	☐
FDA Recognition number [3]	# 5-53	
Was a third party laboratory responsible for testing conformity of the device to this standard identified in the 510(k)?	☒	☐
Is a summary report [4] describing the extent of conformance of the standard used included in the 510(k)? If no, complete a summary report table.	☐	☒
Does the test data for this device demonstrate conformity to the requirements of this standard as it pertains to this device?	☒	☐
Does this standard include acceptance criteria? If no, include the results of testing in the 510(k).	☒	☐
Does this standard include more than one option or selection of the standard? If yes, report options selected in the summary report table.	☐	☒
Were there any deviations or adaptations made in the use of the standard?	☐	☒
If yes, were deviations in accordance with the FDA supplemental information sheet (SIS) [5]?	☐	☐
Were deviations or adaptations made beyond what is specified in the FDA SIS? If yes, report these deviations or adaptations in the summary report table.	☐	☒
Were there any exclusions from the standard? If yes, report these exclusions in the summary report table.	☐	☒
Is there an FDA guidance [6] that is associated with this standard?	☐	☒
If yes, was the guidance document followed in preparation of this 510k?	☐	☐

Title of guidance: _____

[1] The formatting convention for the title is: [SDO] [numeric identifier] [title of standard] [date of publication]

[2] Authority [21 U.S.C. 360d], www.fda.gov/cdrh/stdsprog.html

[3] http://www.accessdata.fda.gov/scripts/cdrh/cfdocs/cfStandards/search.cfm

[4] The summary report should include: any adaptations used to adapt to the device under review (for example, alternative test methods); choices made when options or a selection of methods are descr bed; deviations from the standard; requirements not applicable to the device; and the name address of the test laboratory or certification body involved in conformance assessment to this standard. The summary report includes information on all standards utilized during the development of the device.

[5] The supplemental information sheet (SIS) is additional information which is necessary before FDA recognizes the standard. Found at http:/www.accessdata.fda.gov/scripts/cdrh/cfdocs/cfStandards/search.cfm

[6] The online search of CDRH Guidance Documents can be found at www.fda.gov/cdrh/guidance.html

EXTENT OF STANDARD CONFORMANCE
SUMMARY REPORT TABLE

STANDARD TITLE

CONFORMANCE WITH STANDARD SECTIONS*

SECTION NUMBER	SECTION TITLE	CONFORMANCE? ☐ Yes ☐ No ☐ N/A

TYPE OF DEVIATION OR OPTION SELECTED❖

DESCRIPTION

JUSTIFICATION

SECTION NUMBER	SECTION TITLE	CONFORMANCE? ☐ Yes ☐ No ☐ N/A

TYPE OF DEVIATION OR OPTION SELECTED❖

DESCRIPTION

JUSTIFICATION

SECTION NUMBER	SECTION TITLE	CONFORMANCE? ☐ Yes ☐ No ☐ N/A

TYPE OF DEVIATION OR OPTION SELECTED❖

DESCRIPTION

JUSTIFICATION

* For completeness list all sections of the standard and indicate whether conformance is met. If a section is not applicable (N/A) an explanation is needed under “justification.” Some standards include options, so similar to deviations, the option chosen needs to be described and adequately justified as appropriate for the subject device. Explanation of all deviations or description of options selected when following a standard is required under “type of deviation or option selected,” “description” and “justification” on the report. More than one page may be necessary.

❖ Types of deviations can include an exclusion of a section in the standard, a deviation brought out by the FDA supplemental information sheet (SIS), a deviation to adapt the standard to the device, or any adaptation of a section.

Paperwork Reduction Act Statement

Public reporting burden for this collection of information is estimated to average 1 hour per response, including the time for reviewing instructions, searching existing data sources, gathering and maintaining the data needed, and completing and reviewing the collection of information. Send comments regarding this burden estimate or any other aspect of this collection of information, including suggestions for reducing this burden, to:

Center for Devices and Radiological Health
1350 Piccard Drive
Rockville, MD 20850

An agency may not conduct or sponsor, and a person is not required to respond to, a collection of information unless it displays a currently valid OMB control number.

Form Approved: OMB No. 0910-0120; Expiration Date: 8/31/10

Department of Health and Human Services

Food and Drug Administration

STANDARDS DATA REPORT FOR 510(K)S

(To be filled in by applicant)

This report and the Summary Report Table are to be completed by the applicant when submitting a 510(k) that references a national or international standard. A separate report is required for each standard referenced in the 510(k).

TYPE OF 510(K) SUBMISSION

☒ Traditional ☐ Special ☐ Abbreviated

STANDARD TITLE [1]

ISO 14971: Medical Devices - Application of risk management to medical devices

Please answer the following questions	*Yes*	*No*
Is this standard recognized by FDA [2]?	☐	☒
FDA Recognition number [3]	# _____	
Was a third party laboratory responsible for testing conformity of the device to this standard identified in the 510(k)?	☐	☒
Is a summary report [4] describing the extent of conformance of the standard used included in the 510(k)? If no, complete a summary report table.	☐	☒
Does the test data for this device demonstrate conformity to the requirements of this standard as it pertains to this device?	☐	☒
Does this standard include acceptance criteria? If no, include the results of testing in the 510(k).	☐	☒
Does this standard include more than one option or selection of the standard? If yes, report options selected in the summary report table.	☐	☒
Were there any deviations or adaptations made in the use of the standard?	☐	☒
If yes, were deviations in accordance with the FDA supplemental information sheet (SIS) [5]?	☐	☐
Were deviations or adaptations made beyond what is specified in the FDA SIS? If yes, report these deviations or adaptations in the summary report table.	☐	☒
Were there any exclusions from the standard? If yes, report these exclusions in the summary report table.	☐	☒
Is there an FDA guidance [6] that is associated with this standard?	☐	☒
If yes, was the guidance document followed in preparation of this 510k?	☐	☐

Title of guidance: _____

[1] The formatting convention for the title is: [SDO] [numeric identifier] [title of standard] [date of publication]

[2] Authority [21 U.S.C. 360d], www.fda.gov/cdrh/stdsprog.html

[3] http://www.accessdata.fda.gov/scripts/cdrh/cfdocs/cfStandards/search.cfm

[4] The summary report should include: any adaptations used to adapt to the device under review (for example, alternative test methods); choices made when options or a selection of methods are descr bed; deviations from the standard; requirements not applicable to the device; and the name address of the test laboratory or certification body involved in conformance assessment to this standard. The summary report includes information on all standards utilized during the development of the device.

[5] The supplemental information sheet (SIS) is additional information which is necessary before FDA recognizes the standard. Found at http:/www.accessdata.fda.gov/scripts/cdrh/cfdocs/cfStandards/search.cfm

[6] The online search of CDRH Guidance Documents can be found at www.fda.gov/cdrh/guidance.html

EXTENT OF STANDARD CONFORMANCE
SUMMARY REPORT TABLE

STANDARD TITLE

CONFORMANCE WITH STANDARD SECTIONS*

SECTION NUMBER	SECTION TITLE	CONFORMANCE? ☐ Yes ☐ No ☐ N/A

TYPE OF DEVIATION OR OPTION SELECTED❖

DESCRIPTION

JUSTIFICATION

SECTION NUMBER	SECTION TITLE	CONFORMANCE? ☐ Yes ☐ No ☐ N/A

TYPE OF DEVIATION OR OPTION SELECTED❖

DESCRIPTION

JUSTIFICATION

SECTION NUMBER	SECTION TITLE	CONFORMANCE? ☐ Yes ☐ No ☐ N/A

TYPE OF DEVIATION OR OPTION SELECTED❖

DESCRIPTION

JUSTIFICATION

* For completeness list all sections of the standard and indicate whether conformance is met. If a section is not applicable (N/A) an explanation is needed under "justification." Some standards include options, so similar to deviations, the option chosen needs to be described and adequately justified as appropriate for the subject device. Explanation of all deviations or description of options selected when following a standard is required under "type of deviation or option selected," "description" and "justification" on the report. More than one page may be necessary.

❖ Types of deviations can include an exclusion of a section in the standard, a deviation brought out by the FDA supplemental information sheet (SIS), a deviation to adapt the standard to the device, or any adaptation of a section.

Paperwork Reduction Act Statement

Public reporting burden for this collection of information is estimated to average 1 hour per response, including the time for reviewing instructions, searching existing data sources, gathering and maintaining the data needed, and completing and reviewing the collection of information. Send comments regarding this burden estimate or any other aspect of this collection of information, including suggestions for reducing this burden, to:

Center for Devices and Radiological Health
1350 Piccard Drive
Rockville, MD 20850

An agency may not conduct or sponsor, and a person is not required to respond to, a collection of information unless it displays a currently valid OMB control number.

Form Approved: OMB No. 0910-0120; Expiration Date: 8/31/10

Department of Health and Human Services

Food and Drug Administration

STANDARDS DATA REPORT FOR 510(K)S

(To be filled in by applicant)

This report and the Summary Report Table are to be completed by the applicant when submitting a 510(k) that references a national or international standard. A separate report is required for each standard referenced in the 510(k).

TYPE OF 510(K) SUBMISSION

☒ Traditional ☐ Special ☐ Abbreviated

STANDARD TITLE [1]

ISO 11137-1, Sterilization of health care products - Radiation - Part 1: Requirements for development, validation, and routine control of a sterilization process for medical devices

Please answer the following questions	*Yes*	*No*
Is this standard recognized by FDA [2]?	☒	☐
FDA Recognition number [3]	# 14-297	
Was a third party laboratory responsible for testing conformity of the device to this standard identified in the 510(k)?	☒	☐
Is a summary report [4] describing the extent of conformance of the standard used included in the 510(k)? If no, complete a summary report table.	☐	☒
Does the test data for this device demonstrate conformity to the requirements of this standard as it pertains to this device?	☒	☐
Does this standard include acceptance criteria? If no, include the results of testing in the 510(k).	☒	☐
Does this standard include more than one option or selection of the standard? If yes, report options selected in the summary report table.	☐	☒
Were there any deviations or adaptations made in the use of the standard?	☐	☒
If yes, were deviations in accordance with the FDA supplemental information sheet (SIS) [5]?	☐	☐
Were deviations or adaptations made beyond what is specified in the FDA SIS? If yes, report these deviations or adaptations in the summary report table.	☐	☒
Were there any exclusions from the standard? If yes, report these exclusions in the summary report table.	☐	☒
Is there an FDA guidance [6] that is associated with this standard?	☐	☒
If yes, was the guidance document followed in preparation of this 510k?	☐	☐

Title of guidance: _____

[1] The formatting convention for the title is: [SDO] [numeric identifier] [title of standard] [date of publication]

[2] Authority [21 U.S.C. 360d], www.fda.gov/cdrh/stdsprog.html

[3] http://www.accessdata.fda.gov/scripts/cdrh/cfdocs/cfStandards/search.cfm

[4] The summary report should include: any adaptations used to adapt to the device under review (for example, alternative test methods); choices made when options or a selection of methods are descr bed; deviations from the standard; requirements not applicable to the device; and the name address of the test laboratory or certification body involved in conformance assessment to this standard. The summary report includes information on all standards utilized during the development of the device.

[5] The supplemental information sheet (SIS) is additional information which is necessary before FDA recognizes the standard. Found at http:/www.accessdata.fda.gov/scripts/cdrh/cfdocs/cfStandards/search.cfm

[6] The online search of CDRH Guidance Documents can be found at www.fda.gov/cdrh/guidance.html

EXTENT OF STANDARD CONFORMANCE
SUMMARY REPORT TABLE

STANDARD TITLE

CONFORMANCE WITH STANDARD SECTIONS*

SECTION NUMBER	SECTION TITLE	CONFORMANCE? ☐ Yes ☐ No ☐ N/A

TYPE OF DEVIATION OR OPTION SELECTED❖

DESCRIPTION

JUSTIFICATION

SECTION NUMBER	SECTION TITLE	CONFORMANCE? ☐ Yes ☐ No ☐ N/A

TYPE OF DEVIATION OR OPTION SELECTED❖

DESCRIPTION

JUSTIFICATION

SECTION NUMBER	SECTION TITLE	CONFORMANCE? ☐ Yes ☐ No ☐ N/A

TYPE OF DEVIATION OR OPTION SELECTED❖

DESCRIPTION

JUSTIFICATION

* For completeness list all sections of the standard and indicate whether conformance is met. If a section is not applicable (N/A) an explanation is needed under "justification." Some standards include options, so similar to deviations, the option chosen needs to be described and adequately justified as appropriate for the subject device. Explanation of all deviations or description of options selected when following a standard is required under "type of deviation or option selected," "description" and "justification" on the report. More than one page may be necessary.

❖ Types of deviations can include an exclusion of a section in the standard, a deviation brought out by the FDA supplemental information sheet (SIS), a deviation to adapt the standard to the device, or any adaptation of a section.

Paperwork Reduction Act Statement

Public reporting burden for this collection of information is estimated to average 1 hour per response, including the time for reviewing instructions, searching existing data sources, gathering and maintaining the data needed, and completing and reviewing the collection of information. Send comments regarding this burden estimate or any other aspect of this collection of information, including suggestions for reducing this burden, to:

Center for Devices and Radiological Health
1350 Piccard Drive
Rockville, MD 20850

An agency may not conduct or sponsor, and a person is not required to respond to, a collection of information unless it displays a currently valid OMB control number.

Form Approved: OMB No. 0910-0120; Expiration Date: 8/31/10

Department of Health and Human Services

Food and Drug Administration

STANDARDS DATA REPORT FOR 510(K)S

(To be filled in by applicant)

This report and the Summary Report Table are to be completed by the applicant when submitting a 510(k) that references a national or international standard. A separate report is required for each standard referenced in the 510(k).

TYPE OF 510(K) SUBMISSION

☒ Traditional ☐ Special ☐ Abbreviated

STANDARD TITLE [1]

ISO 11137 -2, Sterilization of health care products -- Radiation -- Part 2: Establishing the sterilization dose

Please answer the following questions	*Yes*	*No*
Is this standard recognized by FDA [2]?	☒	☐
FDA Recognition number [3]	# 14-225	
Was a third party laboratory responsible for testing conformity of the device to this standard identified in the 510(k)?	☒	☐
Is a summary report [4] describing the extent of conformance of the standard used included in the 510(k)? If no, complete a summary report table.	☐	☒
Does the test data for this device demonstrate conformity to the requirements of this standard as it pertains to this device?	☒	☐
Does this standard include acceptance criteria? If no, include the results of testing in the 510(k).	☒	☐
Does this standard include more than one option or selection of the standard? If yes, report options selected in the summary report table.	☐	☒
Were there any deviations or adaptations made in the use of the standard?	☐	☒
If yes, were deviations in accordance with the FDA supplemental information sheet (SIS) [5]?	☐	☐
Were deviations or adaptations made beyond what is specified in the FDA SIS? If yes, report these deviations or adaptations in the summary report table.	☐	☒
Were there any exclusions from the standard? If yes, report these exclusions in the summary report table.	☐	☒
Is there an FDA guidance [6] that is associated with this standard?	☐	☒
If yes, was the guidance document followed in preparation of this 510k?	☐	☐

Title of guidance: _____

[1] The formatting convention for the title is: [SDO] [numeric identifier] [title of standard] [date of publication]

[2] Authority [21 U.S.C. 360d], www.fda.gov/cdrh/stdsprog.html

[3] http://www.accessdata.fda.gov/scripts/cdrh/cfdocs/cfStandards/search.cfm

[4] The summary report should include: any adaptations used to adapt to the device under review (for example, alternative test methods); choices made when options or a selection of methods are descr bed; deviations from the standard; requirements not applicable to the device; and the name address of the test laboratory or certification body involved in conformance assessment to this standard. The summary report includes information on all standards utilized during the development of the device.

[5] The supplemental information sheet (SIS) is additional information which is necessary before FDA recognizes the standard. Found at http:/www.accessdata.fda.gov/scripts/cdrh/cfdocs/cfStandards/search.cfm

[6] The online search of CDRH Guidance Documents can be found at www.fda.gov/cdrh/guidance.html

EXTENT OF STANDARD CONFORMANCE
SUMMARY REPORT TABLE

STANDARD TITLE

CONFORMANCE WITH STANDARD SECTIONS*

SECTION NUMBER	SECTION TITLE	CONFORMANCE? ☐ Yes ☐ No ☐ N/A

TYPE OF DEVIATION OR OPTION SELECTED❖

DESCRIPTION

JUSTIFICATION

SECTION NUMBER	SECTION TITLE	CONFORMANCE? ☐ Yes ☐ No ☐ N/A

TYPE OF DEVIATION OR OPTION SELECTED❖

DESCRIPTION

JUSTIFICATION

SECTION NUMBER	SECTION TITLE	CONFORMANCE? ☐ Yes ☐ No ☐ N/A

TYPE OF DEVIATION OR OPTION SELECTED❖

DESCRIPTION

JUSTIFICATION

* For completeness list all sections of the standard and indicate whether conformance is met. If a section is not applicable (N/A) an explanation is needed under “justification.” Some standards include options, so similar to deviations, the option chosen needs to be described and adequately justified as appropriate for the subject device. Explanation of all deviations or description of options selected when following a standard is required under “type of deviation or option selected,” “description” and “justification” on the report. More than one page may be necessary.

❖ Types of deviations can include an exclusion of a section in the standard, a deviation brought out by the FDA supplemental information sheet (SIS), a deviation to adapt the standard to the device, or any adaptation of a section.

Paperwork Reduction Act Statement

Public reporting burden for this collection of information is estimated to average 1 hour per response, including the time for reviewing instructions, searching existing data sources, gathering and maintaining the data needed, and completing and reviewing the collection of information. Send comments regarding this burden estimate or any other aspect of this collection of information, including suggestions for reducing this burden, to:

Center for Devices and Radiological Health
1350 Piccard Drive
Rockville, MD 20850

An agency may not conduct or sponsor, and a person is not required to respond to, a collection of information unless it displays a currently valid OMB control number.

Form Approved: OMB No. 0910-0120; Expiration Date: 8/31/10

Department of Health and Human Services

Food and Drug Administration

STANDARDS DATA REPORT FOR 510(K)S

(To be filled in by applicant)

This report and the Summary Report Table are to be completed by the applicant when submitting a 510(k) that references a national or international standard. A separate report is required for each standard referenced in the 510(k).

TYPE OF 510(K) SUBMISSION

☒ Traditional ☐ Special ☐ Abbreviated

STANDARD TITLE [1]

ISO 11137 -3, Sterilization of health care products - Radiation - Part 3: Guidance on dosimetric aspects

Please answer the following questions	*Yes*	*No*
Is this standard recognized by FDA [2]?	☒	☐
FDA Recognition number [3]	# 14-298	
Was a third party laboratory responsible for testing conformity of the device to this standard identified in the 510(k)?	☒	☐
Is a summary report [4] describing the extent of conformance of the standard used included in the 510(k)? If no, complete a summary report table.	☐	☒
Does the test data for this device demonstrate conformity to the requirements of this standard as it pertains to this device?	☒	☐
Does this standard include acceptance criteria? If no, include the results of testing in the 510(k).	☒	☐
Does this standard include more than one option or selection of the standard? If yes, report options selected in the summary report table.	☐	☒
Were there any deviations or adaptations made in the use of the standard?	☐	☒
If yes, were deviations in accordance with the FDA supplemental information sheet (SIS) [5]?	☐	☐
Were deviations or adaptations made beyond what is specified in the FDA SIS? If yes, report these deviations or adaptations in the summary report table.	☐	☒
Were there any exclusions from the standard? If yes, report these exclusions in the summary report table.	☐	☒
Is there an FDA guidance [6] that is associated with this standard?	☐	☒
If yes, was the guidance document followed in preparation of this 510k?	☐	☐

Title of guidance: _____

[1] The formatting convention for the title is: [SDO] [numeric identifier] [title of standard] [date of publication]

[2] Authority [21 U.S.C. 360d], www.fda.gov/cdrh/stdsprog.html

[3] http://www.accessdata.fda.gov/scripts/cdrh/cfdocs/cfStandards/search.cfm

[4] The summary report should include: any adaptations used to adapt to the device under review (for example, alternative test methods); choices made when options or a selection of methods are descr bed; deviations from the standard; requirements not applicable to the device; and the name address of the test laboratory or certification body involved in conformance assessment to this standard. The summary report includes information on all standards utilized during the development of the device.

[5] The supplemental information sheet (SIS) is additional information which is necessary before FDA recognizes the standard. Found at http:/www.accessdata.fda.gov/scripts/cdrh/cfdocs/cfStandards/search.cfm

[6] The online search of CDRH Guidance Documents can be found at www.fda.gov/cdrh/guidance.html

EXTENT OF STANDARD CONFORMANCE
SUMMARY REPORT TABLE

STANDARD TITLE

CONFORMANCE WITH STANDARD SECTIONS*

SECTION NUMBER	SECTION TITLE	CONFORMANCE? ☐ Yes ☐ No ☐ N/A

TYPE OF DEVIATION OR OPTION SELECTED❖

DESCRIPTION

JUSTIFICATION

SECTION NUMBER	SECTION TITLE	CONFORMANCE? ☐ Yes ☐ No ☐ N/A

TYPE OF DEVIATION OR OPTION SELECTED❖

DESCRIPTION

JUSTIFICATION

SECTION NUMBER	SECTION TITLE	CONFORMANCE? ☐ Yes ☐ No ☐ N/A

TYPE OF DEVIATION OR OPTION SELECTED❖

DESCRIPTION

JUSTIFICATION

* For completeness list all sections of the standard and indicate whether conformance is met. If a section is not applicable (N/A) an explanation is needed under “justification.” Some standards include options, so similar to deviations, the option chosen needs to be described and adequately justified as appropriate for the subject device. Explanation of all deviations or description of options selected when following a standard is required under “type of deviation or option selected,” “description” and “justification” on the report. More than one page may be necessary.

❖ Types of deviations can include an exclusion of a section in the standard, a deviation brought out by the FDA supplemental information sheet (SIS), a deviation to adapt the standard to the device, or any adaptation of a section.

Paperwork Reduction Act Statement

Public reporting burden for this collection of information is estimated to average 1 hour per response, including the time for reviewing instructions, searching existing data sources, gathering and maintaining the data needed, and completing and reviewing the collection of information. Send comments regarding this burden estimate or any other aspect of this collection of information, including suggestions for reducing this burden, to:

Center for Devices and Radiological Health
1350 Piccard Drive
Rockville, MD 20850

An agency may not conduct or sponsor, and a person is not required to respond to, a collection of information unless it displays a currently valid OMB control number.

Form Approved: OMB No. 0910-0120; Expiration Date: 8/31/10

Department of Health and Human Services

Food and Drug Administration

STANDARDS DATA REPORT FOR 510(K)S

(To be filled in by applicant)

This report and the Summary Report Table are to be completed by the applicant when submitting a 510(k) that references a national or international standard. A separate report is required for each standard referenced in the 510(k).

TYPE OF 510(K) SUBMISSION

☒ Traditional ☐ Special ☐ Abbreviated

STANDARD TITLE [1]

AAMI-TIR27, Sterilization of Healthcare Products: Radiation Sterilization - Substantiantion of 25kGY as a Sterilization Dose - Method VD Max

Please answer the following questions	*Yes*	*No*
Is this standard recognized by FDA [2]?	☐	☒
FDA Recognition number [3]	# _____	
Was a third party laboratory responsible for testing conformity of the device to this standard identified in the 510(k)?	☒	☐
Is a summary report [4] describing the extent of conformance of the standard used included in the 510(k)? If no, complete a summary report table.	☐	☒
Does the test data for this device demonstrate conformity to the requirements of this standard as it pertains to this device?	☒	☐
Does this standard include acceptance criteria? If no, include the results of testing in the 510(k).	☒	☐
Does this standard include more than one option or selection of the standard? If yes, report options selected in the summary report table.	☐	☒
Were there any deviations or adaptations made in the use of the standard?	☐	☒
If yes, were deviations in accordance with the FDA supplemental information sheet (SIS) [5]?	☐	☐
Were deviations or adaptations made beyond what is specified in the FDA SIS? If yes, report these deviations or adaptations in the summary report table.	☐	☒
Were there any exclusions from the standard? If yes, report these exclusions in the summary report table.	☐	☒
Is there an FDA guidance [6] that is associated with this standard?	☐	☒
If yes, was the guidance document followed in preparation of this 510k?	☐	☐

Title of guidance: _____

[1] The formatting convention for the title is: [SDO] [numeric identifier] [title of standard] [date of publication]

[2] Authority [21 U.S.C. 360d], www.fda.gov/cdrh/stdsprog.html

[3] http://www.accessdata.fda.gov/scripts/cdrh/cfdocs/cfStandards/search.cfm

[4] The summary report should include: any adaptations used to adapt to the device under review (for example, alternative test methods); choices made when options or a selection of methods are descr bed; deviations from the standard; requirements not applicable to the device; and the name address of the test laboratory or certification body involved in conformance assessment to this standard. The summary report includes information on all standards utilized during the development of the device.

[5] The supplemental information sheet (SIS) is additional information which is necessary before FDA recognizes the standard. Found at http:/www.accessdata.fda.gov/scripts/cdrh/cfdocs/cfStandards/search.cfm

[6] The online search of CDRH Guidance Documents can be found at www.fda.gov/cdrh/guidance.html

EXTENT OF STANDARD CONFORMANCE
SUMMARY REPORT TABLE

STANDARD TITLE

CONFORMANCE WITH STANDARD SECTIONS*

SECTION NUMBER	SECTION TITLE	CONFORMANCE? ☐ Yes ☐ No ☐ N/A
TYPE OF DEVIATION OR OPTION SELECTED❖		
DESCRIPTION		
JUSTIFICATION		
SECTION NUMBER	SECTION TITLE	CONFORMANCE? ☐ Yes ☐ No ☐ N/A
TYPE OF DEVIATION OR OPTION SELECTED❖		
DESCRIPTION		
JUSTIFICATION		
SECTION NUMBER	SECTION TITLE	CONFORMANCE? ☐ Yes ☐ No ☐ N/A
TYPE OF DEVIATION OR OPTION SELECTED❖		
DESCRIPTION		
JUSTIFICATION		

* For completeness list all sections of the standard and indicate whether conformance is met. If a section is not applicable (N/A) an explanation is needed under "justification." Some standards include options, so similar to deviations, the option chosen needs to be described and adequately justified as appropriate for the subject device. Explanation of all deviations or description of options selected when following a standard is required under "type of deviation or option selected," "description" and "justification" on the report. More than one page may be necessary.

❖ Types of deviations can include an exclusion of a section in the standard, a deviation brought out by the FDA supplemental information sheet (SIS), a deviation to adapt the standard to the device, or any adaptation of a section.

Paperwork Reduction Act Statement

Public reporting burden for this collection of information is estimated to average 1 hour per response, including the time for reviewing instructions, searching existing data sources, gathering and maintaining the data needed, and completing and reviewing the collection of information. Send comments regarding this burden estimate or any other aspect of this collection of information, including suggestions for reducing this burden, to:

Center for Devices and Radiological Health
1350 Piccard Drive
Rockville, MD 20850

An agency may not conduct or sponsor, and a person is not required to respond to, a collection of information unless it displays a currently valid OMB control number.

Form Approved: OMB No. 0910-0120; Expiration Date: 8/31/10

Department of Health and Human Services

Food and Drug Administration

STANDARDS DATA REPORT FOR 510(K)S

(To be filled in by applicant)

This report and the Summary Report Table are to be completed by the applicant when submitting a 510(k) that references a national or international standard. A separate report is required for each standard referenced in the 510(k).

TYPE OF 510(K) SUBMISSION

☒ Traditional ☐ Special ☐ Abbreviated

STANDARD TITLE [1]

ISO 11135-1, Sterilization of health care products –Ethylene Oxide – Part 1: Requirements for the development, validation, and routine control of a sterilization process for medical devices

Please answer the following questions	*Yes*	*No*
Is this standard recognized by FDA [2]?	☒	☐
FDA Recognition number [3]	# 14-228	
Was a third party laboratory responsible for testing conformity of the device to this standard identified in the 510(k)?	☒	☐
Is a summary report [4] describing the extent of conformance of the standard used included in the 510(k)? If no, complete a summary report table.	☐	☒
Does the test data for this device demonstrate conformity to the requirements of this standard as it pertains to this device?	☒	☐
Does this standard include acceptance criteria? If no, include the results of testing in the 510(k).	☒	☐
Does this standard include more than one option or selection of the standard? If yes, report options selected in the summary report table.	☐	☒
Were there any deviations or adaptations made in the use of the standard?	☐	☒
If yes, were deviations in accordance with the FDA supplemental information sheet (SIS) [5]?	☐	☐
Were deviations or adaptations made beyond what is specified in the FDA SIS? If yes, report these deviations or adaptations in the summary report table.	☐	☒
Were there any exclusions from the standard? If yes, report these exclusions in the summary report table.	☐	☒
Is there an FDA guidance [6] that is associated with this standard?	☐	☒
If yes, was the guidance document followed in preparation of this 510k?	☐	☐

Title of guidance: _____

[1] The formatting convention for the title is: [SDO] [numeric identifier] [title of standard] [date of publication]

[2] Authority [21 U.S.C. 360d], www.fda.gov/cdrh/stdsprog.html

[3] http://www.accessdata.fda.gov/scripts/cdrh/cfdocs/cfStandards/search.cfm

[4] The summary report should include: any adaptations used to adapt to the device under review (for example, alternative test methods); choices made when options or a selection of methods are descr bed; deviations from the standard; requirements not applicable to the device; and the name address of the test laboratory or certification body involved in conformance assessment to this standard. The summary report includes information on all standards utilized during the development of the device.

[5] The supplemental information sheet (SIS) is additional information which is necessary before FDA recognizes the standard. Found at http:/www.accessdata.fda.gov/scripts/cdrh/cfdocs/cfStandards/search.cfm

[6] The online search of CDRH Guidance Documents can be found at www.fda.gov/cdrh/guidance.html

EXTENT OF STANDARD CONFORMANCE
SUMMARY REPORT TABLE

STANDARD TITLE

CONFORMANCE WITH STANDARD SECTIONS*

SECTION NUMBER	SECTION TITLE	CONFORMANCE? ☐ Yes ☐ No ☐ N/A

TYPE OF DEVIATION OR OPTION SELECTED❖

DESCRIPTION

JUSTIFICATION

SECTION NUMBER	SECTION TITLE	CONFORMANCE? ☐ Yes ☐ No ☐ N/A

TYPE OF DEVIATION OR OPTION SELECTED❖

DESCRIPTION

JUSTIFICATION

SECTION NUMBER	SECTION TITLE	CONFORMANCE? ☐ Yes ☐ No ☐ N/A

TYPE OF DEVIATION OR OPTION SELECTED❖

DESCRIPTION

JUSTIFICATION

* For completeness list all sections of the standard and indicate whether conformance is met. If a section is not applicable (N/A) an explanation is needed under "justification." Some standards include options, so similar to deviations, the option chosen needs to be described and adequately justified as appropriate for the subject device. Explanation of all deviations or description of options selected when following a standard is required under "type of deviation or option selected," "description" and "justification" on the report. More than one page may be necessary.

❖ Types of deviations can include an exclusion of a section in the standard, a deviation brought out by the FDA supplemental information sheet (SIS), a deviation to adapt the standard to the device, or any adaptation of a section.

Paperwork Reduction Act Statement

Public reporting burden for this collection of information is estimated to average 1 hour per response, including the time for reviewing instructions, searching existing data sources, gathering and maintaining the data needed, and completing and reviewing the collection of information. Send comments regarding this burden estimate or any other aspect of this collection of information, including suggestions for reducing this burden, to:

Center for Devices and Radiological Health
1350 Piccard Drive
Rockville, MD 20850

An agency may not conduct or sponsor, and a person is not required to respond to, a collection of information unless it displays a currently valid OMB control number.

Form Approved: OMB No. 0910-0120; Expiration Date: 8/31/10

Department of Health and Human Services

Food and Drug Administration

STANDARDS DATA REPORT FOR 510(K)S

(To be filled in by applicant)

This report and the Summary Report Table are to be completed by the applicant when submitting a 510(k) that references a national or international standard. A separate report is required for each standard referenced in the 510(k).

TYPE OF 510(K) SUBMISSION

☒ Traditional ☐ Special ☐ Abbreviated

STANDARD TITLE [1]

I10993-7, Biological Evaluation of Medical Devices - Part 7: Ethylene Oxide Sterilization Residuals

Please answer the following questions	*Yes*	*No*
Is this standard recognized by FDA [2]?	☒	☐
FDA Recognition number [3]	# 14-279	
Was a third party laboratory responsible for testing conformity of the device to this standard identified in the 510(k)?	☒	☐
Is a summary report [4] describing the extent of conformance of the standard used included in the 510(k)? If no, complete a summary report table.	☐	☒
Does the test data for this device demonstrate conformity to the requirements of this standard as it pertains to this device?	☒	☐
Does this standard include acceptance criteria? If no, include the results of testing in the 510(k).	☒	☐
Does this standard include more than one option or selection of the standard? If yes, report options selected in the summary report table.	☐	☒
Were there any deviations or adaptations made in the use of the standard?	☐	☒
If yes, were deviations in accordance with the FDA supplemental information sheet (SIS) [5]?	☐	☐
Were deviations or adaptations made beyond what is specified in the FDA SIS? If yes, report these deviations or adaptations in the summary report table.	☐	☒
Were there any exclusions from the standard? If yes, report these exclusions in the summary report table.	☐	☒
Is there an FDA guidance [6] that is associated with this standard?	☐	☒
If yes, was the guidance document followed in preparation of this 510k?	☐	☐

Title of guidance: _____

[1] The formatting convention for the title is: [SDO] [numeric identifier] [title of standard] [date of publication]

[2] Authority [21 U.S.C. 360d], www.fda.gov/cdrh/stdsprog.html

[3] http://www.accessdata.fda.gov/scripts/cdrh/cfdocs/cfStandards/search.cfm

[4] The summary report should include: any adaptations used to adapt to the device under review (for example, alternative test methods); choices made when options or a selection of methods are descr bed; deviations from the standard; requirements not applicable to the device; and the name address of the test laboratory or certification body involved in conformance assessment to this standard. The summary report includes information on all standards utilized during the development of the device.

[5] The supplemental information sheet (SIS) is additional information which is necessary before FDA recognizes the standard. Found at http:/www.accessdata.fda.gov/scripts/cdrh/cfdocs/cfStandards/search.cfm

[6] The online search of CDRH Guidance Documents can be found at www.fda.gov/cdrh/guidance.html

EXTENT OF STANDARD CONFORMANCE
SUMMARY REPORT TABLE

STANDARD TITLE

CONFORMANCE WITH STANDARD SECTIONS*

SECTION NUMBER	SECTION TITLE	CONFORMANCE? ☐ Yes ☐ No ☐ N/A

TYPE OF DEVIATION OR OPTION SELECTED❖

DESCRIPTION

JUSTIFICATION

SECTION NUMBER	SECTION TITLE	CONFORMANCE? ☐ Yes ☐ No ☐ N/A

TYPE OF DEVIATION OR OPTION SELECTED❖

DESCRIPTION

JUSTIFICATION

SECTION NUMBER	SECTION TITLE	CONFORMANCE? ☐ Yes ☐ No ☐ N/A

TYPE OF DEVIATION OR OPTION SELECTED❖

DESCRIPTION

JUSTIFICATION

* For completeness list all sections of the standard and indicate whether conformance is met. If a section is not applicable (N/A) an explanation is needed under "justification." Some standards include options, so similar to deviations, the option chosen needs to be described and adequately justified as appropriate for the subject device. Explanation of all deviations or description of options selected when following a standard is required under "type of deviation or option selected," "description" and "justification" on the report. More than one page may be necessary.

❖ Types of deviations can include an exclusion of a section in the standard, a deviation brought out by the FDA supplemental information sheet (SIS), a deviation to adapt the standard to the device, or any adaptation of a section.

Paperwork Reduction Act Statement

Public reporting burden for this collection of information is estimated to average 1 hour per response, including the time for reviewing instructions, searching existing data sources, gathering and maintaining the data needed, and completing and reviewing the collection of information. Send comments regarding this burden estimate or any other aspect of this collection of information, including suggestions for reducing this burden, to:

Center for Devices and Radiological Health
1350 Piccard Drive
Rockville, MD 20850

An agency may not conduct or sponsor, and a person is not required to respond to, a collection of information unless it displays a currently valid OMB control number.

DEPARTMENT OF HEALTH AND HUMAN SERVICES **MEMORANDUM**

Food and Drug Administration
Office of Device Evaluation
9200 Corporate Boulevard
Rockville, MD 20850

Premarket Notification [510(k)] Review
Traditional

K103692/S1

Date: May 26, 2011
To: The Record
From: Dwight Yen

Office: ODE
Division: DGRND

510(k) Holder: SurgiQuest, Inc.
Device Name: SurgiQuest AirSeal Optical Trocar and Cannula System with integrated Insufflator DPIS 2000
Contact: Daniel Donovan
Phone: (203) 799-2400 x202
Fax: (203) 799-2401
Email: ddonovan@surgiquest.com

I. Purpose and Submission Summary

The 510(k) holder would like to introduce SurgiQuest AirSeal Optical Trocar and Cannula System with integrated Insufflator DPIS 2000 into interstate commerce.

The sponsor has responded to our deficiency questions dated January 20, 2011.

(b)(4) Deficiencies

[redacted]

III. Administrative Requirements

	Yes	No	N/A
Indications for Use page (Indicate if: Prescription or OTC)	x		
Truthful and Accuracy Statement	x		
510(k) Summary or 510(k) Statement	x		
Standards Form	x		

III. Device Description

	Yes	No	N/A
Is the device life-supporting or life sustaining?		x	
Is the device an implant (implanted longer than 30 days)?		x	
Does the device design use software?	x		
Is the device sterile?	x		
Is the device reusable (not reprocessed single use)?			
Are "cleaning" instructions included for the end user?	x		

The SurgiQuest AirSeal® Optical Trocar & Cannula System with integrated Insufflator DPIS 2000 (the "DPIS 2000 System") consists of the following major components: (1) a trocar, (2) a cannula, (3) tube sets, and (4) a micro-processor controlled insufflation, recirculation and filtration unit (the "DPIS 2000 Unit"). The cannula, trocar and tube sets are sterile, single-use products. The DPIS 2000 Unit is non-sterile and reusable.

1. The DPIS 2000 System will be available with an optical trocar and a "blunt tipped" trocar, each for use in the AirSeal Mode only. After insertion of the Optical Trocar or Blunt Tip Trocar into the Cannula (defined below), the device is inserted into the abdomen. The Blunt Tip Trocar can be used with or without an accessory device (fixation device) to secure the Cannula or entry port in place once entry has been achieved. The Optical Trocar will be available in 5, 12, (b)(4) Defn [redacted] diameters and in lengths of 100, 120, and 150 mm. The Blunt Tip Trocar will be available in 5, 12, or 15 mm diameters and 100 mm in length only.

2. The Cannula serves as a port of entry for instruments during laparoscopic surgery. The cannula will be available in 5, 12, (b)(4) [redacted] diameters and in lengths of 100, 120, and 150 mm.

   A manifold located on the proximal portion of the Cannula is used for attaching the AirSeal Tube Set (described below) for insufflation, creation of the gas seal and smoke evacuation. The manifold incorporates three fluid pathway channels which correspond to the three lumens of the AirSeal Tube Set described below, e.g., insufflation supply (which is guided directly into the abdomen for insufflation and pressure measurement), and a supply lumen and a return lumen for establishment and maintenance of the "pressure barrier. The SurgiQuest AirSeal incorporates a gas seal technology. As a result, the AirSeal® does not depend upon rubber mechanical seals employed in existing trocars & cannulae to maintain abdominal pressure. The seal is created by achieving a state of equilibrium within the bore of the cannula tube. The same CO_2 that is used to insufflate the patient is channeled through small orifices in the proximal portion of the cannula. The CO_2, being directed longitudinally into the cannula bore, collides and mixes with the mass of CO_2 gas attempting to escape from the abdomen as a result of peritoneal pressure behind it. At this point, the downward flows creates a pressure barrier against the CO_2 attempting to escape from the abdomen. This gas is returned to the DPIS 2000 Unit and is filtered before reentering the internal AirSeal circulation line of the DPIS 2000 Unit. The filtered gas is then circulated to the Cannula. This circulation of gas to and from the Cannula, which is accomplished within the DPIS 2000 Unit, results in the "pressure barrier" described above. As a result of the "pressure barrier", there is minimal loss of CO_2 during the insertion and removal of medical

instruments through the cannula. A constant low flow of CO_2 (b)(4) [redacted] is delivered to the abdomen through the insufflation lumen to assure a stable pneumoperitoneum during the operation of the DPIS 2000 System in the AirSeal Mode.

3. The DPIS 2000 System will be available with the following single use, sterile tube sets: (i) SurgiQuest AirSeal® Tube Set with attached SurgiQuest Veress Needle Adapter Tube Set; (ii) SugiQuest Smoke Evacuation Tube Set; and (iii) SurgiQuest Standard Insufflation Tube Set. All tube sets are approximately 10 feet long.

4. The DPIS 2000 Unit is designed to function in one of three (3) separate modes of operation: (a) *Insufflation Mode*; (b) *AirSeal Mode*; or (c) *Smoke Evacuation Mode*. In the Insufflation Mode, the DPIS 2000 System functions exclusively as a traditional laparoscopic insufflator and is used with standard veress needles and/or cannulae and the Insufflation Tube Set. In the AirSeal Mode, the DPIS 2000 System functions as a traditional laparoscopic insufflator in the initial insufflation phase and subsequently used with the AirSeal Tube Set, Trocar and Cannula to create a "pressure barrier" or state of equilibrium within the bore of the cannula tube. This pressure barrier, which is created within the cannula using an uninterrupted flow of gas, allows the free passage of various tools (scopes, graspers, clip appliers, etc.) into and out of the abdominal cavity while at the same time maintaining insufflation pressure (i.e. pneumoperitoneum) within the abdomen. In the Smoke Evacuation Mode, the DPIS 2000 System functions as a traditional laparoscopic insufflator and is also used with the Smoke Evacuation Filtered Tube Set and two traditional laparoscopic trocars to filter and evacuate surgical smoke from the abdomen.

   The DPIS 2000 Unit is designed with a tube set recognition feature in the Smoke Evacuation Mode and AirSeal Mode to ensure the insertion of the proper tube set. In addition, the DPIS 2000 Unit is designed with a gas sensor within the internal circulation line. The gas sensor monitors the concentration of CO2 in the gas that is returned from the Cannula to the DPIS 2000 Unit while working in the AirSeal Mode. If the CO2 level drops for more than 30 seconds then a visual and acoustic warning is activated and the set abdominal pressure of the DPIS 2000 Unit is automatically reduced to 12 mmHg and the flow of CO2 delivered to the abdomen through the insufflation lumen is increased. The DPIS 2000 Unit reverts to the preset pressure only after the CO2 level is restored. If the leak has not been resolved by the user within 2 minutes another visual and acoustic warning is activated, informing the user that the insufflation will stop in 2 minutes. If the leak is not resolved within this time, the insufflation stops.

   The DPIS 2000 Unit is also designed with a photo sensor, located in the filter socket of the DPIS 2000 Unit, for the AirSeal Tube Set and Smoke Evacuation Tube Set (also referred to as the filter receptacle). In the event of unintended or accidental ingressing of fluid into the filter housing is detected, visual and acoustic warnings are activated. Thereafter, the user is advised to change the tube set and, if the tube set is not replaced, the respective mode shuts down.

II. Indications for Use

The SurgiQuest AirSeal Optical Trocar & Cannula System with integrated Insufflator DPIS 2000 (the "DPIS 2000 System") is intended for use in diagnostic and/or therapeutic endoscopic procedures to distend a cavity by filling it with gas, to establish and maintain a path of entry for endoscopic instruments and to evacuate surgical

smoke. The trocar of the DPIS 2000 System is indicated for use with or without visualization. This intended use is similar to the predicates.

(b)(4)

[redacted]

III. Predicate Device Comparison

The DPIS 2000 System is a combination of two previously cleared products. The DPIS 2000 System incorporates into a single system the gas seal technology of the SurgiQuest AirSeal Optical Trocar & Cannula System that were cleared by FDA on July 30, 2007 (KO71571), on December 15, 2008 (KO83211) and on November 11, 2009 (K092504). The insufflation technology of the 45 L High Flow Insufflator F114, manufactured by W.O.M. World of Medicine AG, was cleared by FDA on May 23, 2006 (KO63367).

(b)(4) Deficiencies

[redacted]

IV. Labeling

Draft package labels and User manual are provided.

V. Sterilization/Shelf Life/Reuse

The trocars and cannula are single use devices that will be supplied sterile. The tube sets (except the insufflation tubing) are also provided sterile for single use. Method of sterilization is by gamma radiation at 25kGY. Sterility validation is based on ISO 11137-1 for SAL of 10^{-6}.

Trocars are packed and supplied together with a cannula in a PETG Blister with Tyvek Lid. All tubing sets (except the insufflation tubing) are packed and supplied in a double mylar/Tyvek pouch. Sterility shelf life will be 3 years based on accelerated aging studies along with real time studies following ASTM F 1980-02 standards for accelerated aging of sterile medical device packages.

The insufflation tubing is provided sterile by EtO method for single use. The validation was made in accordance with ISO 11135-1. Maximum residual levels are in accordance with ISO 10993-7 to an SAL of 10^{-6}. The device are packed and supplied in a soft Tyvek blister covered with PA/PE foil. Sterility shelf life will be 3 years based on accelerated aging studies along with real time studies following ASTM F 1980-02 standards for accelerated aging of sterile medical device packages.

(b)(4) Deficiencies

(b)(4) Deficiencies

(b)(4) Deficiencies

(b)(4) Deficiencies

(b)(4) Deficiencies

(b)(4) Deficiencies

[redacted]

XII. Contact History

1/20/2011 Left message for the sponsor and will send the deficiency questions above by email.

4/22/2011 Left message for the sponsor and will send the follow-up deficiency questions above by email.

XIII. Recommendation SE to predicates.

Regulation Number: 21 CFR 884.1730
Regulation Name: Laparoscopic insufflator
Regulatory Class: Class II
Product Code: HIF and GCJ

Reviewer — Date 5/26/2011

Branch Chief — I concur with SE.. — Date 5/25/11

 16

Food and Drug Administration
Office of Device Evaluation &
Office of In Vitro Diagnostics

COVER SHEET MEMORANDUM

From: Reviewer Name DWIGHT YEN

Subject: 510(k) Number K103692/S2

To: The Record

Please list CTS decision code SE

☐ Refused to accept (Note: this is considered the first review cycle, See Screening Checklist http://eroom.fda.gov/eRoomReq/Files/CDRH3/CDRHPremarketNotification510kProgram/0_5631/Screening%20Checklist%207%202%2007.doc)

☐ Hold (Additional Information or Telephone Hold).

☒ Final Decision (SE, SE with Limitations, NSE (select code below), Withdrawn, etc.).

Not Substantially Equivalent (NSE) Codes

☐	NO	NSE for lack of predicate
☐	NI	NSE for new intended use
☐	NQ	NSE for new technology that raises new questions of safety and effectiveness
☐	NP	NSE for lack of performance data
☐	NC	NSE call for PMAs
☐	NS	NSE no response
☐	NH	NSE for another reason

Please complete the following for a final clearance decision (i.e., SE, SE with Limitations, etc.):		YES	NO
Indications for Use Page	*Attach IFU*	✓	
510(k) Summary /510(k) Statement	*Attach Summary*	✓	
Truthful and Accurate Statement.	*Must be present for a Final Decision*	✓	
Is the device Class III?			✓
If yes, does firm include Class III Summary?	*Must be present for a Final Decision*		
Does firm reference standards? (If yes, please attach form from http://www.fda.gov/opacom/morechoices/fdaforms/FDA-3654.pdf)			✓
Is this a combination product? (Please specify category N, see http://eroom.fda.gov/eRoomReq/Files/CDRH3/CDRHPremarketNotification510kProgram/0_413b/COMBINATION%20PRODUCT%20ALGORITHM%20(REVISED%203-12-03).DOC			✓
Is this a reprocessed single use device? (Guidance for Industry and FDA Staff – MDUFMA - Validation Data in 510(k)s for Reprocessed Single-Use Medical Devices, http://www.fda.gov/cdrh/ode/guidance/1216.html)			✓
Is this device intended for pediatric use only?			✓
Is this a prescription device? (If both prescription & OTC, check both boxes.)		✓	
Did the application include a completed FORM FDA 3674, Certification with Requirements of ClinicalTrials.gov Data Bank?			
Is clinical data necessary to support the review of this 510(k)?			
Did the application include a completed FORM FDA 3674, *Certification with Requirements of ClinicalTrials.gov Data Bank*? (If not, then applicant must be contacted to obtain completed form.)			
Does this device include an Animal Tissue Source?			
All Pediatric Patients age<=21			

Rev. 5/12/11

Neonate/Newborn (Birth to 28 days)

Infant (29 days -< 2 years old)

Child (2 years -< 12 years old)

Adolescent (12 years -< 18 years old)

Transitional Adolescent A (18 - <21 years old) Special considerations are being given to this group, different from adults age ≥ 21 (different device design or testing, different protocol procedures, etc.)

Transitional Adolescent B (18 -<= 21; No special considerations compared to adults => 21 years old)

Nanotechnology

Is this device subject to the Tracking Regulation? (Medical Device Tracking Guidance, http://www.fda.gov/cdrh/comp/guidance/169.html) *Contact OC.*

Regulation Number	Class*	Product Code
884.1730	II	HIF, GCJ

(*If unclassified, see 510(k) Staff)

Additional Product Codes:

Review: (Branch Chief) GSDB (Branch Code) 5/25/11 (Date)

Final Review: (Division Director) 5/25/11 (Date)

Food and Drug Administration
Office of Device Evaluation &
Office of In Vitro Diagnostics

COVER SHEET MEMORANDUM

From: Reviewer Name DWIGHT YEN

Subject: 510(k) Number K103692/S1

To: The Record

Please list CTS decision code A1

☐ Refused to accept (Note: this is considered the first review cycle, See Screening Checklist http://eroom.fda.gov/eRoomReq/Files/CDRH3/CDRHPremarketNotification510kProgram/0_5631/Screening%20Checklist%207%202%2007.doc)

☑ Hold (Additional Information or Telephone Hold).

☐ Final Decision (SE, SE with Limitations, NSE, Withdrawn, etc.).

Please complete the following for a final clearance decision (i.e., SE, SE with Limitations, etc.):		YES	NO
Indications for Use Page	*Attach IFU*	✓	
510(k) Summary /510(k) Statement	*Attach Summary*	✓	
Truthful and Accurate Statement.	*Must be present for a Final Decision*	✓	
Is the device Class III?			✓
If yes, does firm include Class III Summary?	*Must be present for a Final Decision*		
Does firm reference standards? (If yes, please attach form from http://www.fda.gov/opacom/morechoices/fdaforms/FDA-3654.pdf)			✓
Is this a combination product? (Please specify category N, see http://eroom.fda.gov/eRoomReq/Files/CDRH3/CDRHPremarketNotification510kProgram/0_413b/COMBINATION%20PRODUCT%20ALGORITHM%20(REVISED%203-12-03).DOC			
Is this a reprocessed single use device? (Guidance for Industry and FDA Staff – MDUFMA - Validation Data in 510(k)s for Reprocessed Single-Use Medical Devices, http://www.fda.gov/cdrh/ode/guidance/1216.html)			
Is this device intended for pediatric use only?			
Is this a prescription device? (If both prescription & OTC, check both boxes.)		✓	
Did the application include a completed FORM FDA 3674, Certification with Requirements of ClinicalTrials.gov Data Bank?			
Is clinical data necessary to support the review of this 510(k)? Did the application include a completed FORM FDA 3674, *Certification with Requirements of ClinicalTrials.gov Data Bank*? (If not, then applicant must be contacted to obtain completed form.)			
Does this device include an Animal Tissue Source?			
All Pediatric Patients age<=21			
Neonate/Newborn (Birth to 28 days)			
Infant (29 days -< 2 years old)			
Child (2 years -< 12 years old)			
Adolescent (12 years -< 18 years old)			
Transitional Adolescent A (18 - <21 years old) Special considerations are being given to this group, different from adults age ≥ 21 (different device design or testing, different protocol procedures, etc.)			

Transitional Adolescent B (18 -<= 21; No special considerations compared to adults => 21 years old)

Nanotechnology

Is this device subject to the Tracking Regulation? (Medical Device Tracking Guidance, http://www.fda.gov/cdrh/comp/guidance/169.html) *Contact OC.*

Regulation Number	Class*	Product Code
884.1730	II	HIF

(*If unclassified, see 510(k) Staff)

Additional Product Codes: GCJ

Review: Neil R P Ogden (Branch Chief) GSDB (Branch Code) 4/22/11 (Date)

Final Review: _____ (Division Director) (Date)

DEPARTMENT OF HEALTH AND HUMAN SERVICES **MEMORANDUM**

Food and Drug Administration
Office of Device Evaluation
9200 Corporate Boulevard
Rockville, MD 20850

Premarket Notification [510(k)] Review
Traditional

K103692/S1

Date: April 22, 2011
To: The Record
From: Dwight Yen

Office: ODE
Division: DGRND

510(k) Holder: SurgiQuest, Inc.
Device Name: SurgiQuest AirSeal Optical Trocar and Cannula System with integrated Insufflator DPIS 2000
Contact: Daniel Donovan
Phone: (203) 799-2400 x202
Fax: (203) 799-2401
Email: ddonovan@surgiquest.com

I. Purpose and Submission Summary

The 510(k) holder would like to introduce SurgiQuest AirSeal Optical Trocar and Cannula System with integrated Insufflator DPIS 2000 into interstate commerce.

The sponsor has responded to our deficiency questions dated January 20, 2011.

III. Administrative Requirements

	Yes	No	N/A
Indications for Use page (Indicate if: Prescription or OTC)	x		
Truthful and Accuracy Statement	x		
510(k) Summary or 510(k) Statement	x		
Standards Form	x		

III. Device Description

	Yes	No	N/A
Is the device life-supporting or life sustaining?		x	
Is the device an implant (implanted longer than 30 days)?		x	
Does the device design use software?	x		
Is the device sterile?	x		
Is the device reusable (not reprocessed single use)? Are "cleaning" instructions included for the end user?	x		

The SurgiQuest AirSeal® Optical Trocar & Cannula System with integrated Insufflator DPIS 2000 (the "DPIS 2000 System") consists of the following major components: (1) a trocar, (2) a cannula, (3) tube sets, and (4) a micro-processor controlled insufflation, recirculation and filtration unit (the "DPIS 2000 Unit"). The cannula, trocar and tube sets are sterile, single-use products. The DPIS 2000 Unit is non-sterile and reusable.

1. The DPIS 2000 System will be available with an optical trocar and a "blunt tipped" trocar, each for use in the AirSeal Mode only. After insertion of the Optical Trocar or Blunt Tip Trocar into the Cannula (defined below), the device is inserted into the abdomen. The Blunt Tip Trocar can be used with or without an accessory device (fixation device) to secure the Cannula or entry port in place once entry has been achieved. The Optical Trocar will be available in 5, 12, (b)(4) [redacted] diameters and in lengths of 100, 120, and 150 mm. The Blunt Tip Trocar will be available in 5, 12, (b)(4) [redacted] diameters and 100 mm in length only.

2. The Cannula serves as a port of entry for instruments during laparoscopic surgery. The cannula will be available in 5, 12, (b)(4) [redacted] diameters and in lengths of 100, 120, and 150 mm.

   A manifold located on the proximal portion of the Cannula is used for attaching the AirSeal Tube Set (described below) for insufflation, creation of the gas seal and smoke evacuation. The manifold incorporates three fluid pathway channels which correspond to the three lumens of the AirSeal Tube Set described below, e.g., insufflation supply (which is guided directly into the abdomen for insufflation and pressure measurement), and a supply lumen and a return lumen for establishment and maintenance of the "pressure barrier. The SurgiQuest AirSeal incorporates a gas seal technology. As a result, the AirSeal® does not depend upon rubber mechanical seals employed in existing trocars & cannulae to maintain abdominal pressure. The seal is created by achieving a state of equilibrium within the bore of the cannula tube. The same CO_2 that is used to insufflate the patient is channeled through small orifices in the proximal portion of the cannula. The CO_2, being directed longitudinally into the cannula bore, collides and mixes with the mass of CO_2 gas attempting to escape from the abdomen as a result of peritoneal pressure behind it. At this point, the downward flows creates a pressure barrier against the CO_2 attempting to escape from the abdomen. This gas is returned to the DPIS 2000 Unit and is filtered before reentering the internal AirSeal circulation line of the DPIS 2000 Unit. The filtered gas is then circulated to the Cannula. This circulation of gas to and from the Cannula, which is accomplished within the DPIS 2000 Unit, results in the "pressure barrier" described above. As a result of the "pressure barrier", there is minimal loss of CO_2 during the insertion and removal of medical instruments through the cannula. A constant low flow of CO_2 (b)(4) [redacted] is delivered to the abdomen through the insufflation lumen to assure a stable pneumoperitoneum during the operation of the DPIS 2000 System in the AirSeal Mode.

3. The DPIS 2000 System will be available with the following single use, sterile tube sets: (i) SurgiQuest AirSeal® Tube Set with attached SurgiQuest Veress Needle Adapter Tube Set; (ii) SugiQuest Smoke Evacuation Tube Set; and (iii) SurgiQuest Standard Insufflation Tube Set. All tube sets are approximately 10 feet long.

4. The DPIS 2000 Unit is designed to function in one of three (3) separate modes of operation: (a) *Insufflation Mode*; (b) *AirSeal Mode*; or (c) *Smoke Evacuation Mode*. In the Insufflation Mode, the DPIS 2000 System functions exclusively as a traditional laparoscopic insufflator and is used with standard veress needles and/or cannulae and the Insufflation Tube Set. In the AirSeal Mode, the DPIS 2000 System functions as a traditional laparoscopic insufflator in the initial insufflation phase and subsequently used with the AirSeal Tube Set, Trocar and Cannula to create a "pressure barrier" or state of equilibrium within the bore of the cannula tube. This pressure barrier, which is created within the cannula using an uninterrupted flow of gas, allows the free passage of various tools (scopes, graspers, clip appliers, etc.) into and out of the abdominal cavity while at the same time maintaining insufflation pressure (i.e. pneumoperitoneum) within the abdomen. In the Smoke Evacuation Mode, the DPIS 2000 System functions as a traditional laparoscopic insufflator and is also used with the Smoke Evacuation Filtered Tube Set and two traditional laparoscopic trocars to filter and evacuate surgical smoke from the abdomen.

   The DPIS 2000 Unit is designed with a tube set recognition feature in the Smoke Evacuation Mode and AirSeal Mode to ensure the insertion of the proper tube set. In addition, the DPIS 2000 Unit is designed with a gas sensor within the internal circulation line. The gas sensor monitors the concentration of CO_2 in the gas that is returned from the Cannula to the DPIS 2000 Unit while working in the AirSeal Mode. If the CO_2 level drops for more than 30 seconds then a visual and acoustic warning is activated and the set abdominal pressure of the DPIS 2000 Unit is automatically reduced to 12 mmHg and the flow of CO_2 delivered to the abdomen through the insufflation lumen is increased. The DPIS 2000 Unit reverts to the preset pressure only after the CO_2 level is restored. If the leak has not been resolved by the user within 2 minutes another visual and acoustic warning is activated, informing the user that the insufflation will stop in 2 minutes. If the leak is not resolved within this time, the insufflation stops.

   The DPIS 2000 Unit is also designed with a photo sensor, located in the filter socket of the DPIS 2000 Unit, for the AirSeal Tube Set and Smoke Evacuation Tube Set (also referred to as the filter receptacle). In the event of unintended or accidental ingressing of fluid into the filter housing is detected, visual and acoustic warnings are activated. Thereafter, the user is advised to change the tube set and, if the tube set is not replaced, the respective mode shuts down.

II. Indications for Use

The SurgiQuest AirSeal Optical Trocar & Cannula System with integrated Insufflator DPIS 2000 (the "DPIS 2000 System") is intended for use in diagnostic and/or therapeutic endoscopic procedures to distend a cavity by filling it with gas, to establish

and maintain a path of entry for endoscopic instruments and to evacuate surgical smoke. The trocar of the DPIS 2000 System is indicated for use with or without visualization. This intended use is similar to the predicates.

(b)(4)

[redacted]

III. Predicate Device Comparison

The DPIS 2000 System is a combination of two previously cleared products. The DPIS 2000 System incorporates into a single system the gas seal technology of the SurgiQuest AirSeal Optical Trocar & Cannula System that were cleared by FDA on July 30, 2007 (KO71571), on December 15, 2008 (KO83211) and on November 11, 2009 (K092504). The insufflation technology of the 45 L High Flow Insufflator F114, manufactured by W.O.M. World of Medicine AG, was cleared by FDA on May 23, 2006 (KO63367).

(b)(4)

[redacted].

IV. Labeling

Draft package labels and User manual are provided.

V. Sterilization/Shelf Life/Reuse

The trocars and cannula are single use devices that will be supplied sterile. The tube sets (except the insufflation tubing) are also provided sterile for single use. Method of sterilization is by gamma radiation at 25kGY. Sterility validation is based on ISO 11137-1 for SAL of 10^{-6}.

Trocars are packed and supplied together with a cannula in a PETG Blister with Tyvek Lid. All tubing sets (except the insufflation tubing) are packed and supplied in a double mylar/Tyvek pouch. Sterility shelf life will be 3 years based on accelerated aging studies along with real time studies following ASTM F 1980-02 standards for accelerated aging of sterile medical device packages.

The insufflation tubing is provided sterile by EtO method for single use. The validation was made in accordance with ISO 11135-1. Maximum residual levels are in accordance with ISO 10993-7 to an SAL of 10^{-6}. The device are packed and supplied in a soft Tyvek blister covered with PA/PE foil. Sterility shelf life will be 3 years based on accelerated aging studies along with real time studies following ASTM F 1980-02 standards for accelerated aging of sterile medical device packages.

VI. Biocompatibility

(b)(4)

[redacted]

(b)(4) [redacted] (b)(4)

VIII. Software

Version:		
Level of Concern: Minor (**should be Moderate based on predicates**)		
	Yes	**No**
Software description:	×	
Device Hazard Analysis:	×	
Software Requirements Specifications:	×	
Architecture Design Chart:	×	
Design Specifications:	×	
Traceability Analysis/Matrix:	×	
Development:	×	
Verification & Validation Testing:		×
Revision level history:		×
Unresolved anomalies:		×

(b)(4) [redacted]

VII. Electromagnetic Compatibility and Electrical, Mechanical and Thermal Safety
Ref: K060723 memo by Jeff Silberberg
Sponsor states that the device will be tested by a 3rd party lab according to IEC 60601-1 for electrical safety and IEC 60601-1-2 for EMC.

VIII. Performance Testing – Bench

Test objectives of the 3 individual tests are:

1. when working in the Standard Insufflation Mode as the basic mode of operation for the DPIS 2000, set pressures of 10, 15 and 20 mmHg will be reached and maintained without seeing important pressure rises or drops (test 1, measurements 1 to 9)
2. the activation of the Smoke Evacuation function will not have any influence on the device maintaining the set pressure when working in the Smoke Evacuation Mode (test 2, measurements 10 and 11)
3. the set pressure is reached and accurately maintained when working in the AirSeal Mode (test 3, measurements 12 to 21)

A dummy abdominal model was used in clinical simulation. Twenty measurements were made. The results showed the device reaching stable abdominal pressure

conditions and maintaining desired pressures in all 3 modes.

Lacking bench performance testing of safety features?

IX. **Performance Testing – Animal** None

X. **Performance Testing – Clinical** None

XI. **Deficiencies**

(b)(4)

[redacted]

(b)(4) Deficiencies

(b)(4) Deficiencies

(b)(4) Deficiencies

[redacted]

XII. Contact History

1/20/2011 Left message for the sponsor and will send the deficiency questions above by email.

4/22/2011 Left message for the sponsor and will send the follow-up deficiency questions above by email.

XIII. Recommendation

This submission should be placed on hold pending responses to the follow-up deficiencies (see attached Memo dated April 22, 2011).

Regulation Number: 21 CFR 884.1730
Regulation Name: Laparoscopic insufflator
Regulatory Class: Class II
Product Code: HIF and GCJ

Reviewer — Date 4/22/2011

Branch Chief — I concur with AI issues. — Date 4/22/11

Date: April 22, 2011
To: Daniel Donovan
From: Dwight Yen

Subject: 510(k) for the SurgiQuest AirSeal Optical Trocar & Cannula System with integrated Insufflator DPIS 2000 (K103692)

Per my phone message, here are the follow-up deficiency questions on this submission.

(b)(4) Deficiencies

[redacted]

I will place this submission on hold pending your response with the requested information. You will receive a separate written notification that you have 30 days to respond to this request for additional information. If you need more than 30 days to provide a full and complete response, you should submit a request for an extension of time to Document Mail Center (HFZ 401). For further information on how to apply for an extension and for general 510(k) information, please visit the FDA Website at: http://www.fda.gov/cdrh/devadvice/31435.html#link_6

If you have any questions or need additional clarification, please contact me at (301) 796-6401.

Food and Drug Administration
Office of Device Evaluation &
Office of In Vitro Diagnostics

COVER SHEET MEMORANDUM

From: Reviewer Name DWIGHT YEN

Subject: 510(k) Number K103692

To: The Record

Please list CTS decision code A1

- ☐ Refused to accept (Note: this is considered the first review cycle, See Screening Checklist http://eroom.fda.gov/eRoomReg/Files/CDRH3/CDRHPremarketNotification510kProgram/0_5631/Screening%20Checklist%207%202%2007.doc)
- ☑ Hold (Additional Information or Telephone Hold).
- ☐ Final Decision (SE, SE with Limitations, NSE, Withdrawn, etc.).

Please complete the following for a final clearance decision (i.e., SE, SE with Limitations, etc.):		YES	NO
Indications for Use Page	*Attach IFU*	✓	
510(k) Summary /510(k) Statement	*Attach Summary*	✓	
Truthful and Accurate Statement.	*Must be present for a Final Decision*	✓	
Is the device Class III?			
If yes, does firm include Class III Summary?	*Must be present for a Final Decision*		✓
Does firm reference standards? (If yes, please attach form from http://www.fda.gov/opacom/morechoices/fdaforms/FDA-3654.pdf)		✓	
Is this a combination product? (Please specify category N, see http://eroom.fda.gov/eRoomReg/Files/CDRH3/CDRHPremarketNotification510kProgram/0_413b/COMBINATION%20PRODUCT%20ALGORITHM%20(REVISED%203-12-03).DOC			✓
Is this a reprocessed single use device? (Guidance for Industry and FDA Staff – MDUFMA - Validation Data in 510(k)s for Reprocessed Single-Use Medical Devices, http://www.fda.gov/cdrh/ode/guidance/1216.html)			✓
Is this device intended for pediatric use only?			✓
Is this a prescription device? (If both prescription & OTC, check both boxes.)		✓	
Did the application include a completed FORM FDA 3674, Certification with Requirements of ClinicalTrials.gov Data Bank?			✓
Is clinical data necessary to support the review of this 510(k)? Did the application include a completed FORM FDA 3674, *Certification with Requirements of ClinicalTrials.gov Data Bank*? (If not, then applicant must be contacted to obtain completed form.)			✓
Does this device include an Animal Tissue Source?			
All Pediatric Patients age<=21			
Neonate/Newborn (Birth to 28 days)			
Infant (29 days -< 2 years old)			
Child (2 years -< 12 years old)			
Adolescent (12 years -< 18 years old)			
Transitional Adolescent A (18 - <21 years old) Special considerations are being given to this group, different from adults age ≥ 21 (different device design or testing, different protocol procedures, etc.)			

Transitional Adolescent B (18 -<= 21; No special considerations compared to adults => 21 years old)

Nanotechnology

Is this device subject to the Tracking Regulation? (Medical Device Tracking Guidance, http://www.fda.gov/cdrh/comp/guidance/169.html) *Contact OC.*

Regulation Number	Class*	Product Code
884.1750	~~III~~ II	HIF

(*If unclassified, see 510(k) Staff)

Additional Product Codes: GCJ

Review: [signature] (Branch Chief) GSOB (Branch Code) 1/20/11 (Date)

Final Review: _____ (Division Director) _____ (Date)

DEPARTMENT OF HEALTH AND HUMAN SERVICES **MEMORANDUM**

Food and Drug Administration
Office of Device Evaluation
9200 Corporate Boulevard
Rockville, MD 20850

Premarket Notification [510(k)] Review
Traditional

K103692

Date: January 20, 2011
To: The Record
From: Dwight Yen

Office: ODE
Division: DGRND

510(k) Holder: SurgiQuest, Inc.
Device Name: SurgiQuest AirSeal Optical Trocar and Cannula System with integrated Insufflator DPIS 2000
Contact: Daniel Donovan
Phone: (203) 799-2400 x202
Fax: (203) 799-2401
Email: ddonovan@surgiquest.com

I. Purpose and Submission Summary

The 510(k) holder would like to introduce SurgiQuest AirSeal Optical Trocar and Cannula System with integrated Insufflator DPIS 2000 into interstate commerce.

III. Administrative Requirements

	Yes	No	N/A
Indications for Use page (Indicate if: Prescription or OTC)	x		
Truthful and Accuracy Statement	x		
510(k) Summary or 510(k) Statement	x		
Standards Form	x		

III. Device Description

	Yes	No	N/A
Is the device life-supporting or life sustaining?		x	
Is the device an implant (implanted longer than 30 days)?		x	
Does the device design use software?	x		
Is the device sterile?	x		
Is the device reusable (not reprocessed single use)? Are "cleaning" instructions included for the end user?	x		

 40

Adapter Tube Set; (ii) SugiQuest Smoke Evacuation Tube Set; and (iii) SurgiQuest Standard Insufflation Tube Set. All tube sets are approximately 10 feet long.

4. The DPIS 2000 Unit is designed to function in one of three (3) separate modes of operation: (a) *Insufflation Mode*; (b) *AirSeal Mode*; or (c) *Smoke Evacuation Mode*. In the Insufflation Mode, the DPIS 2000 System functions exclusively as a traditional laparoscopic insufflator and is used with standard veress needles and/or cannulae and the Insufflation Tube Set. In the AirSeal Mode, the DPIS 2000 System functions as a traditional laparoscopic insufflator in the initial insufflation phase and subsequently used with the AirSeal Tube Set, Trocar and Cannula to create a "pressure barrier" or state of equilibrium within the bore of the cannula tube. This pressure barrier, which is created within the cannula using an uninterrupted flow of gas, allows the free passage of various tools (scopes, graspers, clip appliers, etc.) into and out of the abdominal cavity while at the same time maintaining insufflation pressure (i.e. pneumoperitoneum) within the abdomen. In the Smoke Evacuation Mode, the DPIS 2000 System functions as a traditional laparoscopic insufflator and is also used with the Smoke Evacuation Filtered Tube Set and two traditional laparoscopic trocars to filter and evacuate surgical smoke from the abdomen.

   The DPIS 2000 Unit is designed with a tube set recognition feature in the Smoke Evacuation Mode and AirSeal Mode to ensure the insertion of the proper tube set. In addition, the DPIS 2000 Unit is designed with a gas sensor within the internal circulation line. The gas sensor monitors the concentration of CO_2 in the gas that is returned from the Cannula to the DPIS 2000 Unit while working in the AirSeal Mode. If the CO_2 level drops for more than 30 seconds then a visual and acoustic warning is activated and the set abdominal pressure of the DPIS 2000 Unit is automatically reduced to 12 mmHg and the flow of CO_2 delivered to the abdomen through the insufflation lumen is increased. The DPIS 2000 Unit reverts to the preset pressure only after the CO_2 level is restored. If the leak has not been resolved by the user within 2 minutes another visual and acoustic warning is activated, informing the user that the insufflation will stop in 2 minutes. If the leak is not resolved within this time, the insufflation stops.

   The DPIS 2000 Unit is also designed with a photo sensor, located in the filter socket of the DPIS 2000 Unit, for the AirSeal Tube Set and Smoke Evacuation Tube Set (also referred to as the filter receptacle). In the event of unintended or accidental ingressing of fluid into the filter housing is detected, visual and acoustic warnings are activated. Thereafter, the user is advised to change the tube set and, if the tube set is not replaced, the respective mode shuts down.

II. Indications for Use

The SurgiQuest AirSeal Optical Trocar & Cannula System with integrated Insufflator DPIS 2000 (the "DPIS 2000 System") is intended for use in diagnostic and/or therapeutic endoscopic procedures to distend a cavity by filling it with gas, to establish and maintain a path of entry for endoscopic instruments and to evacuate surgical smoke. It is indicated to facilitate the use of various laparoscopic instruments by filling

The SurgiQuest AirSeal® Optical Trocar & Cannula System with integrated Insufflator DPIS 2000 (the "DPIS 2000 System") consists of the following major components: (1) a trocar, (2) a cannula, (3) tube sets, and (4) a micro-processor controlled insufflation, recirculation and filtration unit (the "DPIS 2000 Unit"). The cannula, trocar and tube sets are sterile, single-use products. The DPIS 2000 Unit is non-sterile and reusable.

1. The DPIS 2000 System will be available with an optical trocar and a "blunt tipped" trocar, each for use in the AirSeal Mode only. After insertion of the Optical Trocar or Blunt Tip Trocar into the Cannula (defined below), the device is inserted into the abdomen. The Blunt Tip Trocar can be used with or without an accessory device (fixation device) to secure the Cannula or entry port in place once entry has been achieved. The Optical Trocar will be available in 5, 12, (b)(4) [redacted] diameters and in lengths of 100, 120, and 150 mm. The Blunt Tip Trocar will be available in 5, 12 [redacted] (b)(4) [redacted] diameters and 100 mm in length only.

2. The Cannula serves as a port of entry for instruments during laparoscopic surgery. The cannula will be available in 5, 12 [redacted] diameters and in lengths of 100, 120, and 150 mm.

   A manifold located on the proximal portion of the Cannula is used for attaching the AirSeal Tube Set (described below) for insufflation, creation of the gas seal and smoke evacuation. The manifold incorporates three fluid pathway channels which correspond to the three lumens of the AirSeal Tube Set described below, e.g., insufflation supply (which is guided directly into the abdomen for insufflation and pressure measurement), and a supply lumen and a return lumen for establishment and maintenance of the "pressure barrier. The SurgiQuest AirSeal incorporates a gas seal technology. As a result, the AirSeal® does not depend upon rubber mechanical seals employed in existing trocars & cannulae to maintain abdominal pressure. The seal is created by achieving a state of equilibrium within the bore of the cannula tube. The same CO_2 that is used to insufflate the patient is channeled through small orifices in the proximal portion of the cannula. The CO_2, being directed longitudinally into the cannula bore, collides and mixes with the mass of CO_2 gas attempting to escape from the abdomen as a result of peritoneal pressure behind it. At this point, the downward flows creates a pressure barrier against the CO_2 attempting to escape from the abdomen. This gas is returned to the DPIS 2000 Unit and is filtered before reentering the internal AirSeal circulation line of the DPIS 2000 Unit. The filtered gas is then circulated to the Cannula. This circulation of gas to and from the Cannula, which is accomplished within the DPIS 2000 Unit, results in the "pressure barrier" described above. As a result of the "pressure barrier", there is minimal loss of CO_2 during the insertion and removal of medical instruments through the cannula. A constant low flow of CO_2 (b)(4) [redacted] is delivered to the abdomen through the insufflation lumen to assure a stable pneumoperitoneum during the operation of the DPIS 2000 System in the AirSeal Mode.

3. The DPIS 2000 System will be available with the following single use, sterile tube sets: (i) SurgiQuest AirSeal® Tube Set with attached SurgiQuest Veress Needle

 42

the peritoneal cavity with gas to distend it, by creating and maintaining a gas sealed obstruction-free instrument path and by evacuating surgical smoke. The trocar of the DPIS 2000 System is indicated for use with or without visualization. This intended use is similar to the predicates

III. Predicate Device Comparison

The DPIS 2000 System is a combination of two previously cleared products. The DPIS 2000 System incorporates into a single system the gas seal technology of the SurgiQuest AirSeal Optical Trocar & Cannula System that were cleared by FDA on July 30, 2007 (KO71571), on December 15, 2008 (KO83211) and on November 11, 2009 (K092504). The insufflation technology of the 45 L High Flow Insufflator F114, manufactured by W.O.M. World of Medicine AG, was cleared by FDA on May 23, 2006 (KO63367).

(b)(4) [redacted]

IV. Labeling

Draft package labels and User manual are provided.

V. Sterilization/Shelf Life/Reuse

The trocars and cannula are single use devices that will be supplied sterile. The tube sets (except the insufflation tubing) are also provided sterile for single use. Method of sterilization is by gamma radiation at 25kGY. Sterility validation is based on ISO 11137-1 for SAL of 10^{-6}.

Trocars are packed and supplied together with a cannula in a PETG Blister with Tyvek Lid. All tubing sets (except the insufflation tubing) are packed and supplied in a double mylar/Tyvek pouch. Sterility shelf life will be 3 years based on accelerated aging studies along with real time studies following ASTM F 1980-02 standards for accelerated aging of sterile medical device packages.

The insufflation tubing is provided sterile by EtO method for single use. The validation was made in accordance with ISO 11135-1. Maximum residual levels are in accordance with ISO 10993-7 to an SAL of 10^{-6}. The device are packed and supplied in a soft Tyvek blister covered with PA/PE foil. Sterility shelf life will be 3 years based on accelerated aging studies along with real time studies following ASTM F 1980-02 standards for accelerated aging of sterile medical device packages.

VI. Biocompatibility

(b)(4) [redacted]

VIII. Software

Version:		
Level of Concern: Minor (**should be Moderate based on predicates**)		
	Yes	**No**
Software description:	×	
Device Hazard Analysis:		×
Software Requirements Specifications:	×	
Architecture Design Chart:	×	
Design Specifications:	×	
Traceability Analysis/Matrix:		×
Development:	×	
Verification & Validation Testing:		×
Revision level history:		×
Unresolved anomalies:		×

(b)(4) [redacted]

VII. Electromagnetic Compatibility and Electrical, Mechanical and Thermal Safety
Ref: K060723 memo by Jeff Silberberg
Sponsor states that the device will be tested by a 3rd party lab according to IEC 60601-1 for electrical safety and IEC 60601-1-2 for EMC.

VIII. Performance Testing – Bench

Test objectives of the 3 individual tests are:

1. when working in the Standard Insufflation Mode as the basic mode of operation for the DPIS 2000, set pressures of 10, 15 and 20 mmHg will be reached and maintained without seeing important pressure rises or drops (test 1, measurements 1 to 9)
2. the activation of the Smoke Evacuation function will not have any influence on the device maintaining the set pressure when working in the Smoke Evacuation Mode (test 2, measurements 10 and 11)
3. the set pressure is reached and accurately maintained when working in the AirSeal Mode (test 3, measurements 12 to 21)

A dummy abdominal model was used in clinical simulation. Twenty measurements were made. The results showed the device reaching stable abdominal pressure conditions and maintaining desired pressures in all 3 modes.

Lacking bench performance testing of safety features?

IX. **Performance Testing – Animal** None

X. **Performance Testing – Clinical** None

XI. **Deficiencies**

(b)(4) Deficiencies

[redacted]

(b)(4) Deficiencies

[redacted]

XII. Contact History

1/20/2011 Left message for the sponsor and will send the deficiency questions above by email.

XIII. Recommendation

This submission should be placed on hold pending responses to the deficiencies (see attached Memo dated January 20, 2011).

Regulation Number: 21 CFR 884.1730
Regulation Name: Laparoscopic insufflator
Regulatory Class: Class II
Product Code: HIF and GCJ

Reviewer _____ Date _____

Branch Chief I concur with AI Date 1/20/11

Date: January 20, 2011
To: Daniel Donovan
From: Dwight Yen

Subject: 510(k) for the SurgiQuest AirSeal Optical Trocar & Cannula System with integrated Insufflator DPIS 2000 (K103692)

Per my phone message, here are the deficiency questions on this submission.

(b)(4) Deficiencies

[redacted]

(b)(4) Deficiencies

[redacted]

I will place this submission on hold pending your response with the requested information. You will receive a separate written notification that you have 30 days to respond to this request for additional information. If you need more than 30 days to

provide a full and complete response, you should submit a request for an extension of time to Document Mail Center (HFZ 401). For further information on how to apply for an extension and for general 510(k) information, please visit the FDA Website at: http://www.fda.gov/cdrh/devadvice/31435.html#link_6

If you have any questions or need additional clarification, please contact me at (301) 796-6401.

STATEMENT FOR INDICATIONS FOR USE

510(k) Number: K092504

Device Name: SurgiQuest AirSeal™ Optical Trocar & Cannula System

Indications for Use: The SurgiQuest AirSeal™ Optical Trocar & Cannula System has applications in abdominal and thoracic minimally invasive surgical procedures to establish a path of entry for endoscopic instruments and to evacuate smoke. The trocar may be used with or without visualization for primary and secondary insertions.

Prescription Use: Yes

DO NOT WRITE BELOW THIS LINE-CONTINUE ON ANOTHER PAGE IF NEEDED

Concurrence of CDRH, Office of Device Evaluation

Neil R Ogden for mxm
(Division Sign-Off)
Division of Surgical, Orthopedic,
and Restorative Devices

510(k) Number K092504

STATEMENT FOR INDICATIONS FOR USE

510(k) Number: _____

Device Name: SurgiQuest™ AirSeal™ Optical Trocar & Cannula System *(Trademark name to be determined)*

Indications for Use: The SurgiQuest AirSeal™ Optical Trocar & Cannula System has applications in abdominal and thoracic minimally invasive surgical procedures to establish a path of entry for endoscopic instruments. The trocar may be used with or without visualization for primary and secondary insertions.

(Division Sign-Off)
Division of General, Restorative, and Neurological Devices

Prescription Use: Yes

510(k) Number K071571

DO NOT WRITE BELOW THIS LINE-CONTINUE ON ANOTHER PAGE IF NEEDED

Concurrence of CDRH, Office of Device Evaluation

STATEMENT FOR INDICATIONS FOR USE

510(k) Number: K083211

Device Name: SurgiQuest™ AirSeal™ Optical Trocar & Cannula System *(Trademark name to be determined)*

Indications for Use: The SurgiQuest AirSeal™ Optical Trocar & Cannula System has applications in abdominal and thoracic minimally invasive surgical procedures to establish a path of entry for endoscopic instruments and to evacuate smoke. The trocar may be used with or without visualization for primary and secondary insertions.
(Note: This Indication has been expanded to include smoke evacuation)

Prescription Use: Yes

DO NOT WRITE BELOW THIS LINE-CONTINUE ON ANOTHER PAGE IF NEEDED

Concurrence of CDRH, Office of Device Evaluation

(Division Sign-Off)
Division of Reproductive, Abdominal, and Radiological Devices
510(k) Number K083211

10/20/2008

52

Indication for Use

510(k) Number (if known): K063367

Device Name: 45L CORE Insufflator F114

Indications for Use:

The 45L CORE Insufflator F114 is a CO2 insufflator intended for use in diagnostic and/or therapeutic endoscopic procedures to distend a cavity by filling it with gas. The high flow application, the low flow application and the bariatric application of the device are each indicated for use in facilitating the use of a laparoscope by filling the peritoneal cavity with gas to distend it. The low flow application of the device is indicated for pediatric use. The vessel harvesting application of the F114 is indicated for use during endoscopic vessel harvesting procedures to create a cavity along the saphenous vein and/or radial artery during endoscopic vessel harvesting procedures.

Prescription Use __X___ (Part 21 CFR 801 Subpart D) AND/OR Over-The-Counter Use _____ (21 CFR 801 Subpart C)

(PLEASE DO NOT WRITE BELOW THIS LINE-CONTINUE ON ANOTHER PAGE OF NEEDED)

Concurrence of CDRH, Office of Device Evaluation (ODE)

Nancy C Brogdon
(Division Sign-Off)
Division of Reproductive, Abdominal, and Radiological Devices
510(k) Number K063367

510(k) "SUBSTANTIAL EQUIVALENCE" DECISION-MAKING PROCESS

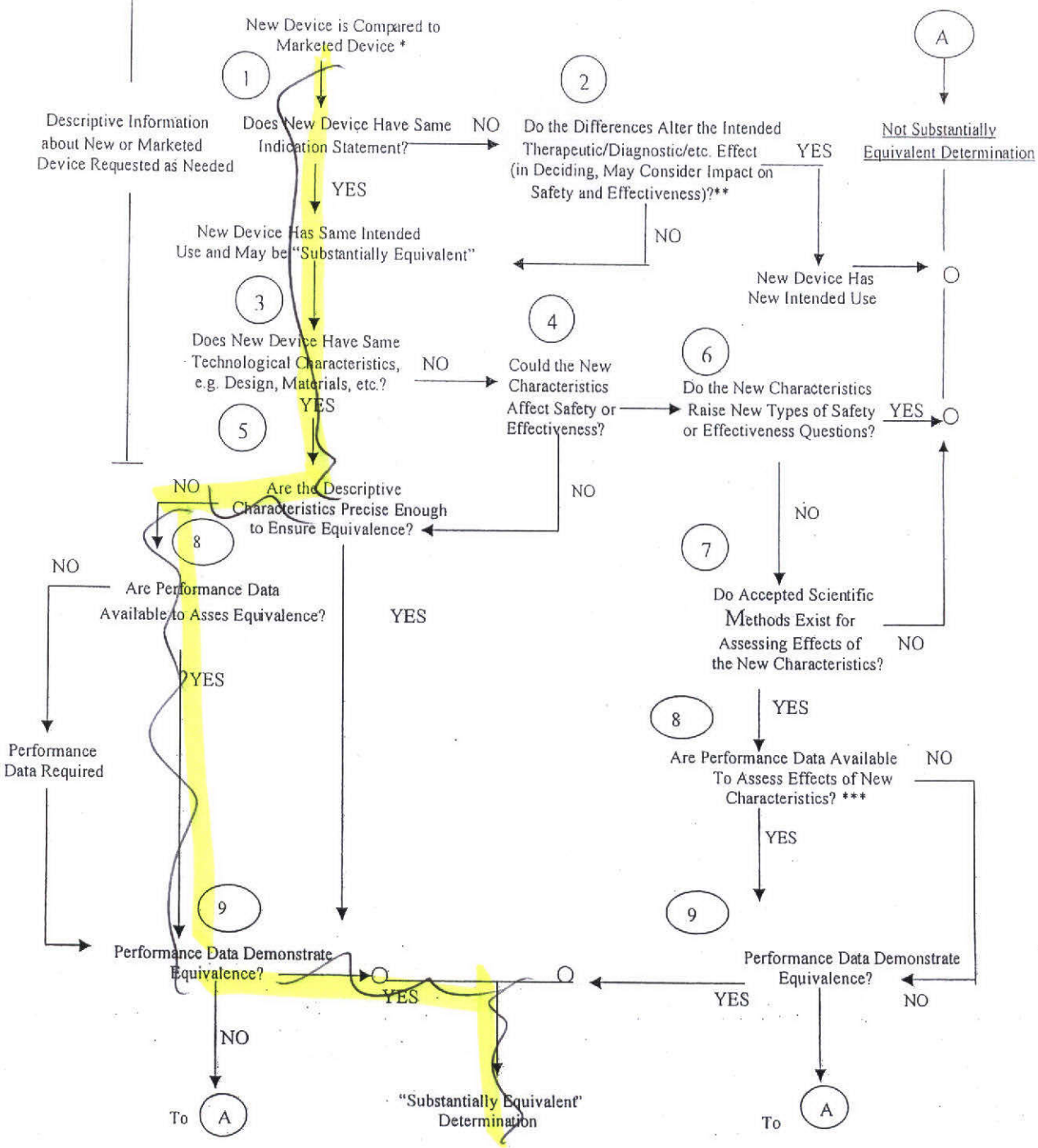

* 510(k) Submissions compare new devices to marketed devices. FDA requests additional information if the relationship between marketed and "predicate" (pre-Amendments or reclassified post-Amendments) devices is unclear.

** This decision is normally based on descriptive information alone, but limited testing information is sometimes required.

*** Data maybe in the 510(k), other 510(k)s, the Center's classification files, or the literature.

DSORD/SU K103 692/S1

SURGIQUEST

Daniel Donovan
Sr. Director of Operations
SurgiQuest, Inc
12 Cascade Blvd., Suite 2B
Orange, CT 06477

FDA CDRH DMC

March 23, 2011

MAR 30 2011

Received

R-31

Mr. Dwight Yen
Food and Drug Administration
Center for Devices and Radiological Health
Document Mail Center - W066-G609
10903 New Hampshire Avenue
Silver Spring, MD 20993-0002

Dear Mr. Yen,

Re: Subject: 510(k) for the SurgiQuest AirSeal Optical Trocar & Cannula System with integrated Insufflator DPIS 2000 (k103692)

Attached please find our response to Request for Additional Information dated January 20, 2011.

We have responded to your request in accordance with FDA guidance on the subject of responding to additional requests for information. Addendum pages have been identified as alphabetical sets of text and data.

We are confident that we have accurately and comprehensively answered the questions asked of us and eagerly anticipate FDA approval of our submission.

If there is anything else that we can do to facilitate the approval of our submission, we are prepared to act and respond immediately.

Thank you for your help in this matter.

Regards,

Daniel Donovan

SURGIQUEST

Daniel Donovan
Sr. Director of Operations
SurgiQuest, Inc
12 Cascade Blvd., Suite 2B
Orange, CT 06477

March 23, 2011

Mr. Dwight Yen
Food and Drug Administration
Center for Devices and Radiological Health
Document Mail Center – W066-G609
10903 New Hampshire Avenue
Silver Spring, MD 20993-0002

Dear Mr. Yen,

Re: Subject: 510(k) for the SurgiQuest AirSeal Optical Trocar & Cannula System with integrated Insufflator DPIS 2000 (k103692)

Attached please find our response to Request for Additional Information dated January 20, 2011.

We have responded to your request in accordance with FDA guidance on the subject of responding to additional requests for information. Addendum pages have been identified as alphabetical sets of text and data.

We are confident that we have accurately and comprehensively answered the questions asked of us and eagerly anticipate FDA approval of our submission.

If there is anything else that we can do to facilitate the approval of our submission, we are prepared to act and respond immediately.

Thank you for your help in this matter.

Regards,

Daniel Donovan

SURGIQUEST

To: **Dwight Yen**
From: **Daniel Donovan**

(b)(4) Deficiencies

12 Cascade Boulevard, Suite 2B | Orange, CT 06477 | 203.799.2400 T | 203.799.2401 F

(b)(4) Deficiencies

(b)(4) Deficiencies

(b)(4) Deficiencies

SURGIQUEST

Addendum 1. A1

12 Cascade Boulevard, Suite 2B | Orange, CT 06477 | 203.799.2400 T | 203.799.2401 F

SurgiQuest.com

Device Description:

The SurgiQuest AirSeal® Optical Trocar & Cannula System with integrated Insufflator DPIS 2000 (the "DPIS 2000 System") consists of the following major components: (1) a trocar, (2) a cannula, (3) tube sets, and (4) a micro-processor controlled insufflation, recirculation and filtration unit (the "DPIS 2000 Unit"). The cannula, trocar and tube sets are sterile, single-use products. The DPIS 2000 Unit is non-sterile and reusable.

The DPIS 2000 Unit is designed to function in one of three (3) separate modes of operation: (a) Insufflation Mode; (b) AirSeal Mode; or (c) Smoke Evacuation Mode.

Intended Use:

The SurgiQuest AirSeal ® Optical Trocar & Cannula System with integrated Insufflator DPIS 2000 (the "DPIS 2000 System") is intended for use in diagnostic and/or therapeutic endoscopic procedures to distend the peritoneal cavity by filling it with gas, to establish and maintain a path of entry for endoscopic instruments and to evacuate surgical smoke. The trocar of the DPIS 2000 System is indicated for use with or without visualization.

Substantial Equivalence:

The DPIS 2000 System is substantially equivalent to the AirSeal Predicate Device (k071571, k083211, k092504) and to the Insufflation Predicate Device (k063367). Specifically, the proposed device has the same intended use and the same indication for use as the Predicate Devices. In addition, the DPIS 2000 System and the Predicate Devices use the same or similar basic operating principles and incorporate the same or similar basic design features. Finally, biocompatibility, sterility, packaging and bench testing demonstrate the safety and effectiveness of the proposed device.

Bench test results demonstrate that the DPIS 2000 System is safe and effective in creating and maintaining pneumoperitoneum in all three modes.

The DPIS 2000 Unit has been developed in accordance with 21 CFR 820, ISO 13485:2003 & ISO 14971:2007

INDICATIONS FOR USE STATMENT

510(k) Number (if known): _____

Device Name: SurgiQuest AirSeal® Optical Trocar & Cannula System with integrated Insufflator DPIS 2000

Indications for Use:

The SurgiQuest AirSeal ® Optical Trocar & Cannula System with integrated Insufflator DPIS 2000 (the "DPIS 2000 System") is intended for use in diagnostic and/or therapeutic endoscopic procedures to distend the peritoneal cavity by filling it with gas, to establish and maintain a path of entry for endoscopic instruments and to evacuate surgical smoke. The trocar of the DPIS 2000 System is indicated for use with or without visualization.

Prescription Use ___X____ (Part 21 CFR 801 Subpart D)	AND/OR	Over-The-Counter Use _____ (21 CFR 801 Subpart C)

(PLEASE DO NOT WRITE BELOW THIS LINE-CONTINUE ON ANOTHER PAGE IF NEEDED)

Concurrence of CDRH, Office of Device Evaluation (ODE)

SurgiQuest AirSeal® Optical Trocar
SurgiQuest AirSeal® Blunt Tip Trocar
SurgiQuest AirSeal® Cannula
SurgiQuest AirSeal® Tube Set
SurgiQuest Smoke Evacuation Tube Set
SurgiQuest Standard Insufflation Tube

Please read the below information carefully.
In addition, please refer to the instructions for use of the DPIS 2000 System.

Indications for Use:
The SurgiQuest AirSeal® Optical Trocar & Cannula System with integrated Insufflator DPIS 2000 (the "DPIS 2000 System") is intended for use in diagnostic and/or therapeutic endoscopic procedures to distend the peritoneal cavity by filling it with gas, to establish and maintain a path of entry for endoscopic instruments, and to evacuate surgical smoke. The trocar of the DPIS 2000 System is indicated for use with or without visualization.

The DPIS 2000 System has three modes of operation:

1. **AirSeal® Mode**
2. **Smoke Evacuation Mode**
3. **Standard Insufflation Mode**

AirSeal® Mode:

When used in the AirSeal® Mode, the System is designed to provide CO_2 gas delivery with stable pneumoperitoneum and continuous smoke evacuation during laparoendoscopic surgery and requires the use of the DPIS Control Unit, AirSeal® Trocar and SmokEvac Filter Tube Set. The SmokEvac Filter Tube Set is used to connect the AirSeal® Trocar to the DPIS 2000 System Control Unit. (Figure 1)

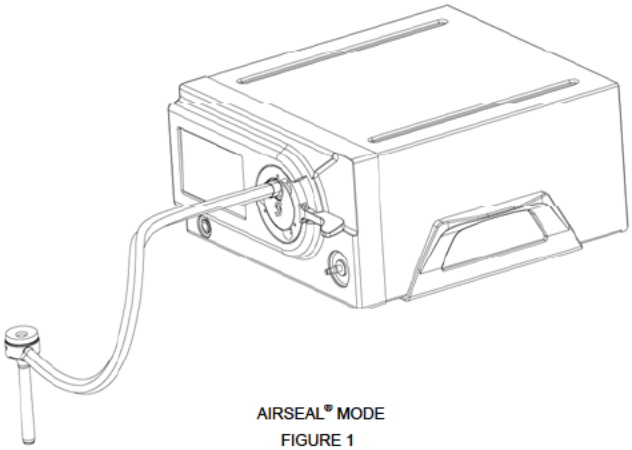

AIRSEAL® MODE
FIGURE 1

The AirSeal® Trocar is available in two configurations: a) Bladeless, Optical Tip Trocar; and b) Blunt Tip Trocar with Suture Anchor. If the AirSeal® Bladeless, Optical Tip Trocar is used for primary entry, use of a laparoscope to provide visualization is recommended to enhance safe abdominal entry. (Figure 2)

EN

3 Device Purpose

Intended use

The SurgiQuest AirSeal ® Optical Trocar & Cannula System with integrated Insufflator DPIS 2000 (the "DPIS 2000 System") is intended for use in diagnostic and/or therapeutic endoscopic procedures to distend the peritoneal cavity by filling it with gas, to establish and maintain a path of entry for endoscopic instruments and to evacuate surgical smoke. The trocar of the DPIS 2000 System is indicated for use with or without visualization.

Contraindications

The device may not be used to fill an abdomen with CO_2 if a laparoscopy is contraindicated. Please consult the manual of your laparoscope for absolute and relative contraindications. The device is not suitable for hysteroscopic insufflation procedures, i.e., it may not be used to distend the uterus.

3.1 Device-inherent Dangers

DANGER!
Positioning the patient
Always position the patient lower than the device to prevent body fluids from leaking into the insufflation tube. Actual pressure may increase and fluid may penetrate the insufflation tube if the patient is repositioned during surgery. If this occurs, immediately disconnect the insufflation tube. When the patient is repositioned onto his or her side, internal tissue may block the insufflation channel. Always insufflate through the elevated side of the patient.

DANGER!
Removing the insufflation tube
Always disconnect the insufflation tube after ending surgery and before switching off the device to prevent backflow of bodily fluids. Fluid may penetrate the insufflation tube whenever you change the gas bottle and/or when you stop the gas flow during the operation. If this happens, you must immediately disconnect the insufflation tube from the trocar or from the device.

DANGER!
Backflow
Body secretions or contaminated gas may backflow into the device through the insufflation tube if
- **a filter is not used,**
- **the actual pressure is higher than the nominal pressure or**
- **the automatic venting valve is activated.**

DANGER!
Gas flow
A high gas flow can occur due to large leaks within the surgical system or instrument. This can result in a false actual pressure reading, which in turn may endanger the patient. In case of a disrupted gas flow, you should therefore inspect device, tube, and instruments immediately. Surgical applications should be carried out with a gas flow of 4-10 l/min. An even lower gas flow is recommended for diagnostic purposes. It is recommended to perform endoscopies with the lowest gas flow possible.

DANGER!
Keep filled CO_2 bottle on hand
Always keep a filled CO_2 bottle on hand ready for replacement. This avoids hav-

SURGIQUEST

Addendum 2. A2

12 Cascade Boulevard, Suite 2B | Orange, CT 06477 | 203.799.2400 T | 203.799.2401 F

SurgiQuest.com

COMPARISON TABLES

AirSeal® Optical Trocar & Cannula System with integrated Insufflator DPIS 2000

Table 1: Optical Trocar, Blunt Tip Trocar, Cannula, AirSeal Tube Set, Smoke Evacuation Tube Set (Disposable Modules)

	SurgiQuest, Inc. **AirSeal® Optical Trocar, AirSeal® Blunt Tip Trocar, AirSeal® Cannula, AirSeal® Tube Set, AirSeal® Smoke Evacuation Tube Set**	**SurgiQuest, Inc.** **AirSeal™ Optical Trocar, AirSeal™ Blunt Tip Trocar, AirSeal™ Cannula, AirSeal™ Tube Set**	**SurgiQuest, Inc.** **AirSeal™ Optical Trocar, AirSeal™ Blunt Tip Trocar, AirSeal™ Cannula, AirSeal™ Tube Set**
NAME OF DEVICE	AirSeal® Optical Trocar & Cannula System with integrated Insufflator DPIS 2000	SurgiQuest AirSeal™ Optical Trocar & Cannula System	SurgiQuest AirSeal™ Optical Trocar & Cannula System
510(K) NUMBER	K103692	K092504, K083211	K071571
CLASSIFICATION	21 CFR §884.1730 and 876.1500	21 CFR § 876.1500	21 CFR § 876.1500
INTENDED USE	Intended for use in diagnostic and/or therapeutic endoscopic procedures to distend the peritoneal cavity by filling it with gas, to establish and maintain a path of entry for endoscopic instruments, and to evacuate surgical smoke.	Intended for use in abdominal and thoracic minimally invasive surgical procedures to establish a path of entry for endoscopic instruments and to evacuate surgical smoke.	Intended for use in abdominal and thoracic minimally invasive surgical procedures to establish a path of entry for endoscopic instruments.
INDICATION FOR USE	The trocar of the DPIS 2000 System is indicated for use with or without visualization.	The trocar may be used with or without visualization for primary and secondary insertions.	The trocar may be used with or without visualization for primary and secondary insertions.
SINGLE USE	Yes	Yes	Yes

	SurgiQuest, Inc. AirSeal® Optical Trocar, AirSeal® Blunt Tip Trocar, AirSeal® Cannula, AirSeal® Tube Set, AirSeal® Smoke Evacuation Tube Set	SurgiQuest, Inc. AirSeal™ Optical Trocar, AirSeal™ Blunt Tip Trocar, AirSeal™ Cannula, AirSeal™ Tube Set	SurgiQuest, Inc. AirSeal™ Optical Trocar, AirSeal™ Blunt Tip Trocar, AirSeal™ Cannula, AirSeal™ Tube Set
STERILE	Yes	Yes	Yes
GAMMA RADIATION STERILIZATION	Yes	Yes	Yes
STERILIZATION VALIDATION	Yes, tested in accordance with ISO 11137 -1, ISO 11137 -2 and AAMI TIR 27. A sterility assurance level (SAL) of 10^{-6} was achieved.	Identical	Identical
PACKAGING			
Optical Trocar, Blunt Tip Trocar and Cannula	Each Optical Trocar and each Blunt Tip Trocar will be packed and supplied together with a Cannula in a PETG Blister with Tyvek Lid.	Identical	Identical
Smoke Evacuation Tube Set and AirSeal Tube Set	Each Smoke Evacuation Tube Set and each Air Seal Tube Set with attached Veress Needle Tube Set will be packed and supplied in a double mylar / Tyvek pouch.	Identical	Identical, only AirSeal Tube Set.
Packaging Validation	Yes, tested in accordance with ISO11607-1, ASTM-F-1980-02 and ISO 11137 -2.	Identical	Identical
BIOCOMPATIBILITY			
Cytotoxicity, Irritation and Hypersensitivity Testing	Yes, in accordance with ISO 10993-5, ISO 10993-10 and ISO 10993-12.	Identical	Identical

	SurgiQuest, Inc. AirSeal® Optical Trocar, AirSeal® Blunt Tip Trocar, AirSeal® Cannula, AirSeal® Tube Set, AirSeal® Smoke Evacuation Tube Set	SurgiQuest, Inc. AirSeal™ Optical Trocar, AirSeal™ Blunt Tip Trocar, AirSeal™ Cannula, AirSeal™ Tube Set	SurgiQuest, Inc. AirSeal™ Optical Trocar, AirSeal™ Blunt Tip Trocar, AirSeal™ Cannula, AirSeal™ Tube Set
OPTICAL TROCAR	Yes	Yes	Yes
Elliptical Chisel Shaped Tip	Yes	Yes	Yes
Transparent Tip	Yes	Yes	Yes
Port for the Insertion of an Endoscope	Yes	Yes	Yes
Locking Mechanism on Handle	Yes	Yes	Yes
Patient Contact Material	(b)(4)	(b) (4)	(b)(4)
Dimensions	Diameter: 5mm, 12mm (b)(4) Length: 100mm, 120mm and 150mm	Diameter: 12mm Length: 100mm, 120mm and 150mm	Diameter: 12mm Length: 100mm, 120mm and 150mm
BLUNT TIP TROCAR	Yes	Yes, but only K092504.	No
Rounded Distal Tip	Yes	Yes	n/a
Availability of Fixation Device	Yes	Yes	n/a
Patient Contact Material	Blunt Tip Trocar: (b)(4) Fixation Device: (b)(4) Silicone	(b)(4)	n/a
Dimensions	Diameter: 5mm,12mm (b)(4) Length: 100 mm	Diameter: 12mm Length: 100 mm	n/a

	SurgiQuest, Inc. AirSeal® Optical Trocar, AirSeal® Blunt Tip Trocar, AirSeal® Cannula, AirSeal® Tube Set, AirSeal® Smoke Evacuation Tube Set	SurgiQuest, Inc. AirSeal™ Optical Trocar, AirSeal™ Blunt Tip Trocar, AirSeal™ Cannula, AirSeal™ Tube Set	SurgiQuest, Inc. AirSeal™ Optical Trocar, AirSeal™ Blunt Tip Trocar, AirSeal™ Cannula, AirSeal™ Tube Set
CANNULA	Yes	Yes	Yes
Patient Contact Material	(b)(4)	(b)(4)	(b)(4)
Dimensions	Diameter: 5mm, 12mm (b)(4) Length: 100mm, 120mm and 150mm	Diameter: 12mm Length: 100mm, 120mm and 150mm	Diameter: 12mm Length: 100mm, 120mm and 150mm
AIRSEAL TUBE SET WITH ATTACHED VERESS NEEDLE TUBE SET	Yes	Yes	Yes
Tube	single length of tri-lumen tubing	Identical	Identical
Housing with Three Filtration Pathways	Yes	Yes	Yes
ULPA filter	Yes	Yes	Yes
(b)(4)	(b)(4)	(b)(4)	(b)(4)
Patient Contact Material (indirect)	Housing: (b)(4) Tubing: (b)(4)	Identical	Identical
Dimensions	Air Seal Tube Set: approx (b)(4) long	Identical	Identical
SMOKE EVACUATION TUBE SET	Yes	No	No

(continued on next page)

Table 2: Insufflation, Recirculation and Filtration Unit of the DPIS 2000 System including Insufflation Tube Set (Capital Equipment and Disposable Module)

	SurgiQuest, Inc. DPIS 2000 Unit	W.O.M. World of Medicine AG 45L CORE Insufflator F114	SurgiQuest, Inc. DPS 1000 Unit
NAME OF DEVICE	AirSeal® Optical Trocar & Cannula System with integrated Insufflator DPIS 2000	45L CORE Insufflator F114	SurgiQuest AirSeal Optical Trocar & Cannula System
510(K) NUMBER	K103692	K063367	K092504, K083211, K071571
CLASSIFICATION	21 CFR §884.1730 and 876.1500	21 CFR §884.1730	21 C.F.R. § 876.1500
INTENDED USE	Intended for use in diagnostic and/or therapeutic endoscopic procedures to distend the peritoneal cavity by filling it with gas, to establish and maintain a path of entry for endoscopic instruments, and to evacuate surgical smoke.	Intended for use in diagnostic and/or therapeutic endoscopic procedures to distend a cavity by filling it with gas.	Intended for use in abdominal and thoracic minimally invasive surgical procedures to establish a path of entry for endoscopic instruments (K071571) and to evacuate surgical smoke (K092504, K083211).
INDICATION FOR USE	No	The high flow application, the low flow application and the bariatric application of the device are each indicated for use in facilitating the use of a laparoscope by filling the peritoneal cavity with gas to distend it. The low flow application of the device is indicated for pediatric use. The vessel harvesting application of the 45L CORE Insufflator F114 is	No

	SurgiQuest, Inc. DPIS 2000 Unit	W.O.M. World of Medicine AG 45L CORE Insufflator F114	SurgiQuest, Inc. DPS 1000 Unit
		indicated for use during endoscopic vessel harvesting procedures to create a cavity along the saphenous vein and/or radial artery during endoscopic vessel harvesting procedures.	
LINE POWER			
Source VAC	100-240V	Identical	Identical
Hz	50-60	Identical	Identical
ELECTROMAGNETIC COMPATIBILITY/ ELECTRICAL SAFETY	IEC 60601-1:1988 + A1:1991 + A2:1995; IEC 60601-1-2 :2001 (all pending)	Identical	Identical
OPERATION	Software-Controlled	Identical	Electro-pneumatic
MODES			
Insufflation Mode	Yes, three insufflations flow levels that can be set by the user.	Yes, High Flow Mode, Low Flow Mode, Vessel Harvesting Mode and Bariatric Mode	Use of external standard insufflators.
AirSeal Mode	Yes	No	Yes
Smoke Evacuation Mode	Yes	No	Yes, operation in AirSeal mode includes smoke evacuation as an ancillary function. (K092504, K083211)
GENERAL SAFETY FEATURES/ALARMS			
Automatic Self Test	Yes	Yes	n/a

	SurgiQuest, Inc. DPIS 2000 Unit	W.O.M. World of Medicine AG 45L CORE Insufflator F114	SurgiQuest, Inc. DPS 1000 Unit
(b)(4) [redacted]	(b)(4) [redacted]	n/a	n/a
FRONT PANEL SETTINGS			
On/Off Button	Yes	Yes	Yes
Start/Stop	Yes	Yes	No
Increasing/Decreasing Pressure	Yes	Yes	Yes
Increasing/Decreasing Flow Rate	Yes	Yes	No
Gas Flow Level	Yes	No	n/a
Smoke Gas Evacuation Low	Yes	No	No
Smoke Gas Evacuation High	Yes	No	No
User Menu	Yes	Yes	No
Home	Yes	No	No
Gas Volume Reset	Yes	Yes	n/a
DISPLAY			
Type of Display	LED Touch screen	LED Touch screen	LED
Start/Stop	Yes	Yes	Yes
Set Pressure	Yes	Yes	Yes
Actual Pressure	Yes	Yes	n/a

	SurgiQuest, Inc. DPIS 2000 Unit	W.O.M. World of Medicine AG 45L CORE Insufflator F114	SurgiQuest, Inc. DPS 1000 Unit
Set Flow	Yes, of all three flow levels.	Yes	n/a
Actual Flow	Yes	Yes	n/a
Mode	Yes	Yes	n/a
Status	Yes	Yes	n/a
Smoke Gas Evacuation Status (High or Low)	Yes	No	No
Gas Consumption	Yes	Yes	n/a
Gas Supply	Yes	Yes	n/a
Error and Warning Messages	Yes	Yes	No
INSUFFLATION FUNCTION			
Insufflator Design	Electronic-mechanical	Identical	Use of external standard insufflators.
Insufflation Medium	CO_2 Gas	Identical	Identical
Pressure Reduction Concept	High Pressure Unit and Low Pressure Unit, which are equipped with mechanical safety valve backups, reduce the pressure of the incoming gas to approximately 70 mmHg. In addition, the device is equipped with a proportional valve, located behind the overpressure release of the LPU, that governs the pressure and flow.	Identical, except for the incorporation of an additional Medium Pressure Reducer.	n/a

	SurgiQuest, Inc. DPIS 2000 Unit	W.O.M. World of Medicine AG 45L CORE Insufflator F114	SurgiQuest, Inc. DPS 1000 Unit
Max. Insufflation Pressure	20 mmHg	High Flow Mode: 30 mmHg Bariatric Mode: 30 mmHg Low Flow Mode: 20 mmHg Vessel Harvesting Mode: 20 mmHg	n/a
Pressure Measurement	Redundant	Identical	n/a
Intermittent and Continuous Pressure Measurement	Only intermittent.	Yes	n/a
Min. Flow Rate	1 l/min	High Flow Mode: 1 l/min Low Flow Mode: 0,1 l/min Vessel Harvesting Mode: 1 l/min Briatric Mode: 1 l/min	n/a
Max. Flow Rate	40 l/min	High Flow Mode: 40 l/min Low Flow Mode: 20 l/min Vessel Harvesting Mode: 20 l/min Bariatric Mode: 45 l/min	n/a
Flow Measurement	Differential pressure measurement, which calculates the flow by measuring the pressure in front of and behind a known resistance.	Identical	n/a
SAFETY FEATURES/ WARNINGS INSUFFLATION (all three modes)			

	SurgiQuest, Inc. DPIS 2000 Unit	W.O.M. World of Medicine AG 45L CORE Insufflator F114	SurgiQuest, Inc. DPS 1000 Unit
Electrical safety valve	Yes, located behind the proportional valve, that automatically stops further gas flow into the body cavity if a malfunction of the proportional valve is detected.	Identical	Yes, redundant safety valves.
Warning if Redundant Pressure Measurement Fails	Yes, acoustic and visual warning. Insufflation stops.	Identical	n/a
Safety Threshold at 15 mmHg	Yes	Yes, in all four modes.	n/a
Automatic Pressure Relief (venting system)	Yes, venting valve automatically opens if an actual pressure of at least 3 - 5 mmHg above the set pressure is detected for a period of 3 - 5 seconds.	Identical in all four insufflation modes. Can also be activated by user in the veress mode of the Low Flow Mode.	Yes, automatic pressure venting at 35mmHg and 45mmHg.
Visual Warning in case of venting system malfunction	Yes	Yes	n/a
Overpressure Warning if set Pressure is exceeded	Yes, acoustic and visual alarm after 3-5 seconds.	Yes, acoustic and visual alarm in all four modes after 2 to 5 seconds. (dependant on user settings).	n/a
Overpressure Warning if overpressure is not reduced within 5 sec.	Yes, acoustic and visual warning is emitted. Insufflation stops.	Identical	n/a

	SurgiQuest, Inc. DPIS 2000 Unit	W.O.M. World of Medicine AG 45L CORE Insufflator F114	SurgiQuest, Inc. DPS 1000 Unit
Overpressure Warning when Pressure > 30 mmHg	Yes, acoustic and visual warning after 3 to 5 seconds. Insufflation stops.	Yes, acoustic and visual warning after 2 to 5 seconds (dependant on user settings) in High Flow Mode and Bariatric Mode. Insufflation stops.	n/a
No Insufflation/Device Stops if Electronic Fails	Yes	Yes	n/a
Alarm when Gas Supply not Sufficient	Yes	Yes	n/a
Display of Warnings and Alarms	Yes, clear text on display of device.	Yes, clear text on display of device.	n/a
AIRSEAL FUNCTION			
Design	Electronic-mechanical	n/a	Pneumatic
Gas Source	Incorporated into DPIS 2000 Unit	n/a	Use of External standard insufflators.
Creation of Gas Seal	AirSeal Circuit of the DPIS 2000 Unit is designed as a closed system.	n/a	Operates with an open system to create and maintain the gas seal.
SAFETY FEATURES/ WARNINGS AIRSEAL			
Warning if AirSeal Tube Set not attached	Yes, visual warning if AirSeal Mode is selected but corresponding tube set not attached.	n/a	No
Constant Monitoring of CO_2 Concentration in Circulated Gas	Yes	n/a	No

	SurgiQuest, Inc. DPIS 2000 Unit	W.O.M. World of Medicine AG 45L CORE Insufflator F114	SurgiQuest, Inc. DPS 1000 Unit
Low CO_2 Concentration Warning	Yes, visual and acoustic warning is activated and set abdominal pressure is automatically reduced to 12 mmHg if CO_2 concentration is less than 70% for more than 30 seconds.	n/a	No
Warning if Low CO_2 Concentration not Resolved	(b)(4) [redacted] (b) [redacted]. If leak persists insufflation stops after 2 minutes.	n/a	No
(b)(4) [redacted] **Sensor for Fluid Level Monitoring in Filter Housing**	Yes	n/a	No
Fluid Level Warning	Yes, if filter housing is filled with fluid up to the low or high fluid level, visual and acoustic warnings are activated. Shut down if tube set is not changed.	n/a	No
SMOKE EVACUATION FUNCTION			
Design	Electronic-mechanical	n/a	Electro-pneumatic
Gas Source	Incorporated into DPIS 2000 Unit	n/a	Use of External standard insufflators.

	SurgiQuest, Inc. DPIS 2000 Unit	W.O.M. World of Medicine AG 45L CORE Insufflator F114	SurgiQuest, Inc. DPS 1000 Unit
Smoke Evacuation Mode as Distinct Mode of Operation	Yes	n/a	No, operation in AirSeal mode includes smoke evacuation as an ancillary function.
Different Levels of Smoke Evacuation	Yes, user can select between low evacuation level (b)(4) [redacted] (b)(4) and high evacuation level (b)(4) [redacted]	n/a	No (see above).
SAFETY FEATURES/ WARNINGS SMOKE EVACUATION			
Warning if Smoke Evacuation Tube Set not attached	Yes, visual warning if Smoke Evacuation Mode is selected but corresponding tube set not attached.	n/a	No
(b)(4) [redacted] **Sensor for Fluid Level Monitoring in Filter Housing**	Yes	n/a	No
Fluid Level Warning	(b)(4) [redacted] (b)(4) [redacted] If leak persists insufflation stops after 2 minutes.	n/a	No
INSUFFLATION TUBE SET	Yes	Yes	No, use of standard insufflation tube sets.

	SurgiQuest, Inc. DPIS 2000 Unit	W.O.M. World of Medicine AG 45L CORE Insufflator F114	SurgiQuest, Inc. DPS 1000 Unit
Single Use	Yes	Yes	n/a
Sterile	Yes	Yes	n/a
ETO Sterilization	Yes	Yes	n/a
Sterilization Validation	Yes, tested in accordance with ISO 11135-1, ISO 10993-7. A sterility assurance level (SAL) was $\leq 10^{-6}$.	Identical	n/a
Packaging	Insufflation Tube Set will be packed and supplied in a soft Tyvek blister covered with PA/PE foil.	Identical	n/a
Packaging Validation	Yes, testing in accordance with ISO11607-1 and ASTM-F-1980-02 (pending).	Identical	n/a
Biocompatibility	Yes, in accordance with ISO 10993-5, ISO 10993-10 and ISO 10993-12.	Identical	n/a

SURGIQUEST

Addendum 3. A3

12 Cascade Boulevard, Suite 2B | Orange, CT 06477 | 203.799.2400 T | 203.799.2401 F

SurgiQuest.com

12. Substantial Equivalence Discussion

Please find below a detailed comparison between the proposed device and the predicate devices sufficient to demonstrate substantial equivalence of the devices in terms of:

- indications for use;
- technology; and/or
- performance specifications, including any testing.

In addition, please find the 510(k) summaries and statement of the predicate devices.

12. Substantial Equivalence Discussion

The SurgiQuest AirSeal® Optical Trocar & Cannula System with integrated Insufflator DPIS 2000 (the "DPIS 2000 System") is substantially equivalent to the SurgiQuest AirSeal Optical Trocar & Cannula System, manufactured by SurgiQuest, Inc., that has been cleared by FDA on July 30, 2007 (k071571), on December 15, 2008 (k083211) and on November 11, 2009 (k092504) (the "AirSeal Predicate Devices"), and to the 45 L High Flow Insufflator F114, manufactured by W.O.M. World of Medicine AG, that has been cleared by FDA on May 23, 2006 (k063367) (the "Insufflator Predicate Device" and together with the AirSeal Predicate Devices, the "Predicate Devices"). The DPIS 2000 System is merely a combination of the AirSeal Predicate Devices and the Insufflator Predicate Device.

1. Similarities and Differences in Intended Use and Indication for Use between the DPIS 2000 System and Predicate Devices

The proposed device and the AirSeal Predicate Devices are all intended for use in diagnostic and/or therapeutic endoscopic procedures to establish and maintain a path of entry for endoscopic instruments. Both the proposed device and the AirSeal Predicate Devices are indicated to facilitate the use of various laparoscopic instruments by creating and maintaining a gas sealed obstruction-free instrument path. In addition, like the AirSeal Predicate Device (k092504), the proposed device is intended for use in diagnostic and/or therapeutic endoscopic procedures to evacuate surgical smoke. Finally, like the Insufflation Predicate Device, the DPIS 2000 System is intended for use in diagnostic and/or therapeutic endoscopic procedures to distend a cavity by filling it with gas and is indicated to facilitate the use of various laparoscopic instruments by filling the peritoneal cavity with gas to distend it. Dissimilarity between the predicate and the subject device are improvements such as software controls and improved user interface and ergonomics.

2. Similarities and Differences in Technology and Design between the DPIS 2000 System and the AirSeal Predicate Devices

The DPIS 2000 System is substantially equivalent in fundamental technology, functional design and material to its predicate devices. Both the proposed device and the AirSeal Predicate Devices consist of the following major components: a trocar, a cannula, tube sets, and a recirculation and filtration unit.

With the exception of (b)(4) [redacted] the AirSeal® Optical Trocar (the "Optical Trocar"), the AirSeal® Blunt Tip Trocar (the "Blunt Tip Trocar") including fixation device and the AirSeal® Cannula (the "Cannula") that are available for use with the proposed device are substantially equivalent in technology, design and material to the trocars, fixation device and cannula of the AirSeal Predicate Devices

In addition, the AirSeal® filtered Tube Set with attached Veress Needle Tube Set (the "AirSeal Tube Set") that is supplied for use with DPIS 2000 System to enable the use of the proposed device in the AirSeal Mode is identical to the tube sets used with the AirSeal Predicate Devices except for (b)(4) [redacted] (b)(4) [redacted] The AirSeal® Smoke Evacuation Tube Set (the "Smoke Evacuation Tube Set"), which is specifically designed for use of the DPIS 2000 System in the Smoke Evacuation Mode, is similar in technology, design and material to the tube set used with the AirSeal Predicate Devices. The differences between the Smoke Evacuation Tube Set and the tube set of the AirSeal Predicate Devices are predominantly the result of the fact that the Smoke Evacuation Tube Set is not used to create and maintain pneumoperitoneum and include:

- The Smoke Evacuation Tube Set incorporates a paratube whereas the tube Set of the AirSeal Predicate Device is designed with a three lumen tubing;

- (b)(4) [redacted]
- The fluid path of the filter housing that is used by the tube set of the AirSeal Predicate Device as a "supply line" for creating the gas seal is occluded in the Smoke Evacuation Tube Set;
- Each lumen is assembled with a luer lock connector to facilitate the attachment of standard commercially available cannulae. The tri-lumen tube set for the subject device and the AirSeal Predicate Device is equipped with a proprietary connector;
- (b)(4) [redacted]

Furthermore, the above described components of the DPIS 2000 System, like the components of the AirSeal Predicate Devices, are single use devices that will be supplied sterile by means of gamma radiation. Finally, the packaging of the above mentioned components of the DPIS 2000 System is identical to the packaging of the AirSeal Predicate Device single use components.

Like the AirSeal Predicate Devices, the DPIS 2000 System incorporates a gas seal technology and, as a result, does not depend upon rubber mechanical seals employed in existing trocars and cannulae to maintain abdominal pressure. The principal distinction of the AirSeal® Trocar & Cannula is the absence of a duckbill type of mechanical seal to maintain pneumoperitoneum during the course of the laparoscopic procedures. The seal is created by achieving a state of equilibrium within the bore of the cannula tube. This equilibrium or barrier, which is created within the cannula using an uninterrupted flow of CO_2, allows the free passage of various tools (graspers, clip appliers, etc.) into and out of the abdominal cavity while at the same time maintaining insufflation pressures within the abdomen. The method that is used by the insufflation, recirculation and filtration unit of the DPIS 2000

System (the "DPIS 2000 Unit") to create and maintain the "pressure barrier" is similar to the method employed by the AirSeal Predicate Devices.

Like the recirculation and filtration unit of the AirSeal Predicate Devices (the "DPS 1000 Unit"), the DPIS 2000 Unit creates a "pressure barrier" by circulating gas to and from the Cannula, (b)(4) [redacted] The differences between the DPS 1000 and the DPIS 2000 Unit are the following:

- The DPIS 2000 Unit is a software controlled device whereas the DPS 1000 Unit is controlled pneumatically;
- The DPIS 2000 Unit is equipped with a LED touch screen;
- Unlike the DPS1000 Unit, the DPIS 2000 Unit performs an initial self check and is suitable for operation after successfully passing the initial self check;
- Unlike the DPS 1000 Unit, which uses an external standard insufflator as a gas source to create and maintain the gas seal, the DPIS 2000 Unit incorporates the insufflation technology of the Insufflator Predicate Device;
- Unlike the DPS 1000 Unit, which only operates in the AirSeal mode that includes smoke evacuation as an ancillary and subordinate function, the DPIS 2000 Unit integrates three distinct modes of operation: a Standard Insufflation Mode, a separate Smoke Evacuation Mode and an AirSeal® Mode;
- (b)(4) [redacted]
- Unlike the DPS 1000 Unit, which operates with an open system to create and maintain the gas seal, the AirSeal Circuit of the DPIS 2000 Unit AirSeal is designed as a closed system;
- The DPIS 2000 Unit is designed with a safety feature while in the AirSeal Mode that constantly monitors the level of CO_2 that is returned from the Cannula to the DPIS 2000 Unit. A visual and acoustic warning is activated and the set abdominal pressure is automatically reduced to 12 mmHg if the CO_2 level drops for more

than 30 seconds. (b)(4) [redacted] If the leak is still not resolved within this timeframe, the insufflation stops;

- The DPIS 2000 Unit is also designed with a (b)(4) [redacted] sensor, located in the filter socket of the DPIS 2000 Unit (also referred to as the filter receptacles), that monitors the fluid level in the filter housing of the AirSeal Tube Set in the event of unintended ingress of fluid. If the filter housing is filled with fluid up to the low or high fluid level, visual and acoustic warnings are activated. The user is instructed to change the tube set and the AirSeal Mode finally shuts down.

3. Similarities and Differences in Technology and Design between the DPIS 2000 System and the Insufflator Predicate Device

The insufflation technological characteristics of the DPIS 2000 Unit are identical to technological characteristics of the Insufflator Predicate Device. Like the Insufflator Predicate Device, the DPIS 2000 Unit is a microprocessor controlled device that incorporates the following major components: (b)(4) [redacted] Like the Insufflation Predicate Device, the DPIS 2000 Unit performs an initial self check and is only ready for operation after successfully passing the initial self check.

The pressure relief and reduction concept of both the Insufflator Predicate device and the DPIS 2000 Unit is identical. (b)(4) [redacted] In addition, both devices are equipped with a proportional valve, (b)(4) [redacted] that governs the pressure and flow. Finally, both the Insufflation Predicate Device and the proposed device are designed with an electrical safety valve, located behind the

proportional valve, which automatically stops further gas flow into the body cavity if a malfunction of the proportional valve is detected.

The DPIS 2000 Unit, like the Insufflator Predicate Device allows for flow settings in the range of 1 l/min to 40 l/min and both the set flow (the DPIS 2000 Unit displays the set flow level) and the actual flow value are shown on the touch screen display during the operation. The flow measurement of both the DPIS 2000 Unit and the Insufflator Predicate Device is performed by a "differential pressure measurement", which calculates the flow by measuring the pressure in front of and behind a known resistance.

In addition, both the DPIS 2000 Unit and the Insufflator Predicate Device, allow for pressure settings in the range of 1 mmHg to 20 mmHg, but are designed with a safety threshold at 15 mmHg that requires positive action on the part of the user if a pressure setting above 15 mmHg is desired. Both the set pressure value and the actual pressure value are shown on the touch screen display during the operation. Like the Insufflator Predicate Device, the DPIS 2000 Unit is designed with a (b)(4) [redacted]. In case of a malfunction of one sensor, a visual and acoustic warning is activated and the insufflation stops immediately. Both the Insufflator Predicate Device and the proposed device are designed with an automatic venting system that is activated to reduce the actual pressure if an overpressure is detected. If the venting valve is unable to reduce the overpressure back to the set pressure, both the Insufflation Predicate Device and the proposed device stop the insufflation and a visual and continuous acoustic warning is activated. In addition, both devices are designed with the following safety threshold: if the intra-abdominal pressure exceeds or has reached the safety threshold of 30 mmHg, the warning "Overpressure" is show on the touch screen display and a continuous audible alarm is activated and insufflation is stopped.

Finally, both the Insufflation Predicate Device and the DPIS 2000 Unit are available with a similar sterile, single use standard insufflation tube set and are equipped with a fluid sensor to detect any backflow of fluid into the device.

The differences between the Insufflator Predicate Device and the DPIS 2000 System are the following:

- (b)(4) [redacted]
- [redacted]
- The Insufflator Predicate Device allows for pressure settings in the range of 1 mmHg to 30 mmHg in the standard insufflation mode designed to be used during laparoscopic procedures as opposed to a maximum pressure setting of 20 mmHg allowed by the proposed device.

Conclusion:

The DPIS 2000 System is substantially equivalent to the AirSeal Predicate Devices (k071571, k083211, k092504) and to the Insufflation Predicate Device (k063367). The proposed device has the same intended use and indication for use as the Predicate Devices. In addition, the DPIS 2000 System and the Predicate Devices use the same or similar basic operating principles and incorporate the same or similar basic design. Specifically, the Optical Trocar, the Blunt Tip Trocar including fixation device and the Cannula of the proposed device are substantially equivalent in technology, design and material to the trocars, fixation device and cannula of the AirSeal Predicate Device. The AirSeal Filtered Tube Set is substantially equivalent to the tube set used with the AirSeal Predicate Devices. The Smoke Evacuation Tube Set is similar in technology, design and material to the tube set used with the AirSeal Predicate Devices and the differences between the two devices are predominately the result of the fact that the Smoke Evacuation Tube Set is only used for insufflation and to evacuate smoke and not to create and maintain a pressure barrier. The basic design and materials are identical.

Furthermore, the basic technology of the DPIS 2000 System is to create and maintain pneumoperitoneum, create and maintain a seal in the Cannula and to evacuate smoke is identical to the basic technology used by the Predicate Devices.

Risk analysis, in accordance with the applicable Standards, confirms that the device as it is has been redesigned poses no additional risks with regard to safety and effectiveness. Moreover, many of the modifications designed into the subject device are related to the implementation of safety features (b)(4) [redacted] or user convenience (e.g. LED touch screen; incorporation of the insufflation technology, gas seal technology and smoke evacuation technology in one unit as opposed to the use of an external standard insufflator; incorporation of three separate modes [Standard Insufflation Mode, Smoke Evacuation Mode and AirSeal Mode] in one system and availability of additional instrument sizes).

In conclusion, the device verification and validation demonstrates that the subject device is substantially equivalent in design, materials, function and intended use to the predicates. Risk analysis, in accordance with the applicable Standards, confirms that the device as it is has been redesigned poses no additional risks with regard to safety and effectiveness. Biocompatibility, packaging, method of sterilization are unchanged for the disposable modules. Engineering bench tests demonstrate the safety and effectiveness of the DPIS 2000 System. In particular, bench testing that was performed with the proposed device demonstrates its ability to safely and efficiently create and maintain a port of entry during simulated laparoscopic surgery. The subject device has been tested to demonstrate its ability to create and maintain adequate pneumoperitoneum in all three modes of operation.

SURGIQUEST

Addendum 4. A4

12 Cascade Boulevard, Suite 2B | Orange, CT 06477 | 203.799.2400 T | 203.799.2401 F

SurgiQuest.com

15. Biocompatibility

Please refer to the attached information about the biocompatibility evaluation.

15. Biocompatibility

1. AirSeal® Trocars and Cannula

The components of the SurgiQuest AirSeal® Optical Trocar & Cannula System with integrated Insufflator DPIS 2000 (the "DPIS 2000 System") that come into short term direct tissue contact [redacted]

(b)(4)

Cannula Module
Patient Contact Polymer Materials

Device Component	Material Type	Manufacturer	Material ID	Predicate 510(k)s
(b)(4) [redacted]				k092504, k083211, k071571
[redacted]				k092504, k083211, k071571

Trocar Module
Patient Contact Materials

Device Component	Material Type	Manufacturer	Material ID	Predicate 510(k)s
(b)(4) [redacted]				(b)(4) [redacted]
[redacted]				k092504, k083211, k071571
[redacted]				k092504, k083211, k071571

The Trocar and Cannula modules also contain the following non-patient contact materials:

Trocar Module
Non Patient Contact Materials

Device Component	Material Type	Manufacturer	Material ID	Predicate 510(k)s
Trocar Components	(b)(4) [redacted]	[redacted]	[redacted]	k092504, k083211, k071571
Trocar Components	(b)(4) [redacted]	[redacted]	[redacted]	k092504, k083211, k071571
Trocar Components	(b)(4) [redacted]	[redacted]	[redacted]	k092504, k083211, k071571
Trocar Components	(b)(4) [redacted]	[redacted]	[redacted]	k092504, k083211, k071571

The Cannula consists of medical grade (b)(4) [redacted] has been well characterized chemically and physically in the published literature and has a long history of safe use with regards to biocompatibility. In addition, the Cannula of the proposed device is identical in material and manufacturing to the cannula of the predicate AirSeal Optical Trocar & Cannula Systems (k092504, k083211 and k071571) (the "AirSeal Predicate Devices").

The tip and the shaft of the Optical Trocar consist of medical grade (b)(4) [redacted] and medical grade stainless steel, respectively. The O-Ring located on the shaft consists of medical grade silicone. Like (b)(4) [redacted] medical grade stainless steel and medical grade silicone have been well characterized chemically and physically in the published literature and have a long history of safe use with regards to biocompatibility. In addition, the Optical Trocar of the proposed device is identical in material and manufacturing to the trocar of the AirSeal Predicate Devices.

The tip and the shaft of the Blunt Tip Trocar consist of medical grade (b)(4) [redacted] and the O-Ring located on the shaft consists of medical grade silicone. The fixation device consists of medical grade (b)(4) [redacted] medical grade stainless steel, medical grade (b)(4) [redacted] and medical grade silicone. All above listed materials have been well characterized chemically and physically in the published literature and have a long history of safe use with regards to biocompatibility. In addition, each of the Blunt Tip Trocar and the fixation device of the proposed device are identical in

material and manufacturing to the blunt tipped trocar and fixation device of the AirSeal Predicate Devices.

Finally, cytotoxicity, irritation and hypersensitivity testing following GLP with the cannula, the optical trocar, the blunt tipped trocar and fixation device of the AirSeal Predicate Devices in accordance with the FDA recognized standard **ISO 10993-5, "Biological Evaluation of Medical Devices – Part 5: Tests for InVitro Cytotoxicity"**, **ISO 10993-10, "Biological Evaluation of Medical Devices – Part 10: Tests for Irritation and Delayed Type Hypersensitivity",** and **ISO 10993-12, "Biological Evaluation of Medical Devices – Part 12: Sample Preparation and Reference Material"** has been performed by (b)(4) [redacted] (b)(4) [redacted]

2. Smoke Evacuation Tube Set and AirSeal Tube Set with attached Veress Needle Adapter Tube Set, Standard Insufflation Tube Set

The components of both the Smoke Evacuation Tube Set and the AirSeal Tube Set with attached Veress Needle Adapter Tube Set that come into short term indirect contact with the patient are the filter housing, the filters and the tubing, which consist of the following medical grade materials:

Filtered Tube Set Modules
Indirect-Patient Contact Materials

Device Component	Material Type	Manufacturer	Material ID	Predicate 510(k)s
Filter Housing	(b)(4) [redacted]			k092504, k083211, k071571
Filter Media				k092504, k083211, k071571
Filter Potting				k092504, k083211, k071571
Tubing				k092504, k083211, k071571
Tubing Adhesive				k092504, k083211,

				k071571
Luer Connectors	(b)(4) [redacted]	[redacted]	[redacted]	k092504, k083211, k071571

All the above listed materials have been well characterized chemically and physically in the published literature and have a long history of safe use with regards to biocompatibility. In addition, the AirSeal Tube Set with attached Veress Needle Adapter Tube Set is identical in material and manufacturing to the tube set of the Tube Set of the AirSeal Predicate Devices.

Finally, cytotoxicity, irritation and hypersensitivity testing following GLP with the tube set of the AirSeal Predicate Devices in accordance with the FDA recognized standard **ISO 10993-5, "Biological Evaluation of Medical Devices – Part 5: Tests for InVitro Cytotoxicity"**, **ISO 10993-10, "Biological Evaluation of Medical Devices – Part 10: Tests for Irritation and Delayed Type Hypersensitivity", as amended 2006** and **ISO 10993-5, "Biological Evaluation of Medical Devices – Part 12: Sample Preparation and Reference Material"** has been performed by (b)(4) [redacted]

The ISO 10993 tripartite testing sighted above will be conducted on the Smoke Evacuation Tube Set.

The components of the Insufflation Tube Set for the DPIS 2000 System that come into indirect short term contact with the patient are the filter, the tubing, the Luer Lock connectors and the suction connector and consist of the following medical grade plastic and glass fiber materials:

Insufflation Tube Set
Indirect-Patient Contact Materials

Device Component	Material Type	Manufacturer	Material ID	Predicate 510(k)s
Tubing	(b)(4) [redacted]			K063367
Filter Housing (Gas/Air Vent Filter)				K063379
Filter Media (Gas Air Vent Filter)				K063379

Luer Connector	(b)(4) [redacted]	K063367
Luer Cap	[redacted]	K063367
Suction Connector	[redacted]	K063367

All the above listed materials have been well characterized chemically and physically in the published literature, have a long history of safe use and have been tested in accordance with ISO 10993 for cytotoxicity, irritation and hypersensitivity

SURGIQUEST

Addendum 5. A5

12 Cascade Boulevard, Suite 2B | Orange, CT 06477 | 203.799.2400 T | 203.799.2401 F

SurgiQuest.com

(b)(4) Third Party Software Documentation

(b)(4) Third Party Software Documentation

(b)(4) Third Party Software Documentation

(b)(4) Third Party Software Documentation

(b)(4) Third Party Software Documentation

(b)(4) Third Party Software Documentation

(b)(4) Third Party Software Documentation

(b)(4) Third Party Software Documentation

(b)(4) Third Party Software Documentation

(b)(4) Third Party Software Documentation

(b)(4) Third Party Software Documentation

(b)(4) Third Party Software Documentation

(b)(4) Third Party Software Documentation

(b)(4) Third Party Software Documentation

(b)(4) Third Party Software Documentation

(b)(4) Third Party Software Documentation

(b)(4) Third Party Software Documentation

(b)(4) Third Party Software Documentation

(b)(4) Third Party Software Documentation

(b)(4) Third Party Software Documentation

(b)(4) Third Party Software Documentation

(b)(4) Third Party Software Documentation

(b)(4) Third Party Software Documentation

(b)(4) Third Party Software Documentation

(b)(4) Third Party Software Documentation

(b)(4) Third Party Software Documentation

(b)(4) Third Party Software Documentation

(b)(4) Third Party Software Documentation

(b)(4) Third Party Software Documentation

(b)(4) Third Party Software Documentation

(b)(4) Third Party Software Documentation

(b)(4) Third Party Software Documentation

(b)(4) Third Party Software Documentation

(b)(4) Third Party Software Documentation

(b)(4) Third Party Software Documentation

(b)(4) Third Party Software Documentation

(b)(4) Third Party Software Documentation

(b)(4) Third Party Software Documentation

(b)(4) Third Party Software Documentation

(b)(4) Third Party Software Documentation

(b)(4) Third Party Software Documentation

(b)(4) Third Party Software Documentation

(b)(4) Third Party Software Documentation

(b)(4) Third Party Software Documentation

(b)(4) Third Party Software Documentation

(b)(4) Third Party Software Documentation

(b)(4) Third Party Software Documentation

(b)(4) Third Party Software Documentation

(b)(4) Third Party Software Documentation

(b)(4) Third Party Software Documentation

(b)(4) Third Party Software Documentation

(b)(4) Third Party Software Documentation

(b)(4) Third Party Software Documentation

(b)(4) Third Party Software Documentation

(b)(4) Third Party Software Documentation

(b)(4) Third Party Software Documentation

(b)(4) Third Party Software Documentation

(b)(4) Third Party Software Documentation

SURGIQUEST

Addendum 6. A6

12 Cascade Boulevard, Suite 2B | Orange, CT 06477 | 203.799.2400 T | 203.799.2401 F

SurgiQuest.com

(b)(4) Third Party Risk Analysis

(b)(4) Third Party Risk Analysis

(b)(4) Third Party Risk Analysis

(b)(4) Third Party Risk Analysis

(b)(4) Third Party Risk Analysis

(b)(4) Third Party Risk Analysis

(b)(4) Third Party Risk Analysis

(b)(4) Third Party Risk Analysis

(b)(4) Third Party Risk Analysis

(b)(4) Third Party Risk Analysis

(b)(4) Third Party Risk Analysis

(b)(4) Third Party Risk Analysis

(b)(4) Third Party Risk Analysis

(b)(4) Third Party Risk Analysis

(b)(4) Third Party Risk Analysis

(b)(4) Third Party Risk Analysis

(b)(4) Third Party Risk Analysis

(b)(4) Third Party Risk Analysis

(b)(4) Third Party Risk Analysis

(b)(4) Third Party Risk Analysis

(b)(4) Third Party Risk Analysis

(b)(4) Third Party Risk Analysis

(b)(4) Third Party Risk Analysis

(b)(4) Third Party Risk Analysis

(b)(4) Third Party Risk Analysis

(b)(4) Third Party Risk Analysis

(b)(4) Third Party Risk Analysis

(b)(4) Third Party Risk Analysis

(b)(4) Third Party Risk Analysis

(b)(4) Third Party Risk Analysis

(b)(4) Third Party Risk Analysis

(b)(4) Third Party Risk Analysis

(b)(4) Third Party Risk Analysis

(b)(4) Third Party Risk Analysis

(b)(4) Third Party Risk Analysis

(b)(4) Third Party Risk Analysis

(b)(4) Third Party Risk Analysis

(b)(4) Third Party Risk Analysis

(b)(4) Third Party Risk Analysis

(b)(4) Third Party Risk Analysis

(b)(4) Third Party Risk Analysis

(b)(4) Third Party Risk Analysis

(b)(4) Third Party Risk Analysis

(b)(4) Third Party Risk Analysis

(b)(4) Third Party Risk Analysis

(b)(4) Third Party Risk Analysis

(b)(4) Third Party Risk Analysis

(b)(4) Third Party Risk Analysis

(b)(4) Third Party Risk Analysis

(b)(4) Third Party Risk Analysis

(b)(4) Third Party Risk Analysis

(b)(4) Third Party Risk Analysis

(b)(4) Third Party Risk Analysis

(b)(4) Third Party Risk Analysis

(b)(4) Third Party Risk Analysis

(b)(4) Third Party Risk Analysis

(b)(4) Third Party Risk Analysis

(b)(4) Third Party Risk Analysis

(b)(4) Third Party Risk Analysis

(b)(4) Third Party Risk Analysis

(b)(4) Third Party Risk Analysis

(b)(4) Third Party Risk Analysis

(b)(4) Third Party Risk Analysis

(b)(4) Third Party Risk Analysis

(b)(4) Third Party Risk Analysis

(b)(4) Third Party Risk Analysis

(b)(4) Third Party Risk Analysis

(b)(4) Third Party Risk Analysis

(b)(4) Third Party Risk Analysis

(b)(4) Third Party Risk Analysis

(b)(4) Third Party Risk Analysis

(b)(4) Third Party Risk Analysis

(b)(4) Third Party Risk Analysis

(b)(4) Third Party Risk Analysis

SURGIQUEST

Addendum 8. A8

12 Cascade Boulevard, Suite 2B | Orange, CT 06477 | 203.799.2400 T | 203.799.2401 F

SurgiQuest.com

(b)(4) Verification Protocol

(b)(4) Verification Protocol

(b)(4) Verification Protocol

(b)(4) Verification Protocol

(b)(4) Verification Protocol

(b)(4) Verification Protocol

(b)(4) Verification Protocol

(b)(4) Verification Protocol

(b)(4) Verification Protocol

(b)(4) Verification Protocol

(b)(4) Verification Protocol

(b)(4) Verification Protocol

(b)(4) Verification Protocol

(b)(4) Verification Protocol

(b)(4) Verification Protocol

(b)(4) Verification Protocol

(b)(4) Verification Protocol

(b)(4) Verification Protocol

(b)(4) Verification Protocol

(b)(4) Verification Protocol

(b)(4) Verification Protocol

(b)(4) Verification Protocol

(b)(4) Verification Protocol

(b)(4) Verification Protocol

(b)(4) Verification Protocol

(b)(4) Verification Protocol

(b)(4) Verification Protocol

(b)(4) Verification Protocol

(b)(4) Verification Protocol

(b)(4) Verification Protocol

(b)(4) Verification Protocol

(b)(4) Verification Protocol

(b)(4) Verification Protocol

(b)(4) Verification Protocol

(b)(4) Verification Protocol

(b)(4) Verification Protocol

(b)(4) Verification Protocol

(b)(4) Verification Protocol

(b)(4) Verification Protocol

(b)(4) Verification Protocol

(b)(4) Verification Protocol

(b)(4) Verification Protocol

(b)(4) Verification Protocol

(b)(4) Verification Protocol

(b)(4) Verification Protocol

(b)(4) Verification Protocol

(b)(4) Verification Protocol

(b)(4) Verification Protocol

(b)(4) Verification Protocol

(b)(4) Verification Protocol

(b)(4) Verification Protocol

(b)(4) Verification Protocol

(b)(4) Verification Protocol

(b)(4) Verification Protocol

(b)(4) Verification Protocol

(b)(4) Verification Protocol

(b)(4) Verification Protocol

(b)(4) Verification Protocol

(b)(4) Verification Protocol

(b)(4) Verification Protocol

(b)(4) Verification Protocol

(b)(4) Verification Protocol

(b)(4) Verification Protocol

(b)(4) Verification Protocol

SURGIQUEST

Addendum 9. A9

12 Cascade Boulevard, Suite 2B | Orange, CT 06477 | 203.799.2400 T | 203.799.2401 F

SurgiQuest.com

Section 17, Electromagnetic Compatibility and Electrical Safety

The recommended safety distances in Section 11.7, Recommended Safety Distances between Portable and Mobile HF Telecommunications Devices and the DPIS 2000 System, in the DPIS 2000 User Manual are taken from standard EN60601-1-2 Section 5.2 tab. 5 recommended distances between portable and mobile HF telecommunications devices and respective active medical devices. The user manual consequently fulfills the requirements as mentioned in the standard by adding the information as suggested in said table, as there are no other circumstances in regards to the DPIS 2000 that would disqualify the recommended safety distances.

SURGIQUEST

Addendum 10. A10

12 Cascade Boulevard, Suite 2B | Orange, CT 06477 | 203.799.2400 T | 203.799.2401 F

SurgiQuest.com

(b)(4) Third Party Testing

(b)(4) Third Party Testing

(b)(4) Third Party Testing

(b)(4) Third Party Testing

(b)(4) Third Party Testing

(b)(4) Third Party Testing

(b)(4) Third Party Testing

(b)(4) Third Party Testing

(b)(4) Third Party Testing

(b)(4) Third Party Testing

(b)(4) Third Party Testing

(b)(4) Third Party Testing

(b)(4) Third Party Testing

(b)(4) Third Party Testing

(b)(4) Third Party Testing

(b)(4) Third Party Testing

(b)(4) Third Party Testing

(b)(4) Third Party Testing

(b)(4) Third Party Testing

(b)(4) Third Party Testing

(b)(4) Third Party Testing

(b)(4) Third Party Testing

(b)(4) Third Party Testing

(b)(4) Third Party Testing

(b)(4) Third Party Testing

(b)(4) Third Party Testing

(b)(4) Third Party Testing

(b)(4) Third Party Testing

(b)(4) Third Party Testing

(b)(4) Third Party Testing

(b)(4) Third Party Testing

(b)(4) Third Party Testing

(b)(4) Third Party Testing

(b)(4) Third Party Testing

(b)(4) Third Party Testing

(b)(4) Third Party Testing

(b)(4) Third Party Testing

(b)(4) Third Party Testing

(b)(4) Third Party Testing

(b)(4) Third Party Testing

(b)(4) Third Party Testing

(b)(4) Third Party Testing

(b)(4) Third Party Testing

(b)(4) Third Party Testing

(b)(4) Third Party Testing

(b)(4) Third Party Testing

(b)(4) Third Party Testing

(b)(4) Third Party Testing

(b)(4) Third Party Testing

(b)(4) Third Party Testing

Su/DSORD K103692/S2

SURGIQUEST

Daniel Donovan
Sr. Director of Operations
SurgiQuest, Inc
12 Cascade Blvd., Suite 2B
Orange, CT 06477

DATE: 5.18.11

Mr. Dwight Yen
Food and Drug Administration
Center for Devices and Radiological Health
Document Mail Center – W066-G609
10903 New Hampshire Avenue
Silver Spring, MD 20993-0002

MAY 19 2011
K6

Dear Mr. Yen,

Re: Subject: 510(k) for the SurgiQuest AirSeal Optical Trocar & Cannula System with integrated Insufflator DPIS 2000 (k103692)

Attached please find our response to your Request for Additional Information dated April 22, 2011.

We have responded to your request in accordance with FDA guidance on the subject of responding to additional requests for information. Addendum pages have been identified as alphabetical sets of text and data.

We trust that we have accurately and comprehensively answered the questions asked of us and eagerly anticipate FDA approval of our submission.

If there is anything else that we can do to facilitate the approval of our submission, we are prepared to act and respond immediately.

Thank you for your help in this matter.

Regards,

5/17/11

Daniel Donovan

SURGIQUEST

Daniel Donovan
Sr. Director of Operations
SurgiQuest, Inc
12 Cascade Blvd., Suite 2B
Orange, CT 06477

DATE: 5.18.11

Mr. Dwight Yen
Food and Drug Administration
Center for Devices and Radiological Health
Document Mail Center - W066-G609
10903 New Hampshire Avenue
Silver Spring, MD 20993-0002

Dear Mr. Yen,

Re: Subject: 510(k) for the SurgiQuest AirSeal Optical Trocar & Cannula System with integrated Insufflator DPIS 2000 (k103692)

Attached please find our response to your Request for Additional Information dated April 22, 2011.

We have responded to your request in accordance with FDA guidance on the subject of responding to additional requests for information. Addendum pages have been identified as alphabetical sets of text and data.

We trust that we have accurately and comprehensively answered the questions asked of us and eagerly anticipate FDA approval of our submission.

If there is anything else that we can do to facilitate the approval of our submission, we are prepared to act and respond immediately.

Thank you for your help in this matter.

Regards,

5/17/11

Daniel Donovan

To: **Dwight Yen**
From: **Daniel Donovan**
Date: **5.18.11**
Subject: **Response to Request for Additional Information for the SurgiQuest AirSeal Optical Trocar & Cannula System with integrated Insufflator DPIS 2000 (K103692)**

(b)(4) Deficiencies

[redacted]

(b)(4) Deficiencies

(b)(4) Third Party Testing

(b)(4) Third Party Testing

(b)(4) Third Party Testing

(b)(4) Third Party Testing

(b)(4) Third Party Testing

(b)(4) Third Party Testing

(b)(4) Third Party Testing

(b)(4) Third Party Testing

(b)(4) Third Party Testing

(b)(4) Third Party Testing

(b)(4) Third Party Testing

(b)(4) Third Party Testing

(b)(4) Third Party Testing

(b)(4) Third Party Testing

(b)(4) Third Party Testing

(b)(4) Third Party Testing

(b)(4) Third Party Testing

(b)(4) Third Party Testing

(b)(4) Third Party Testing

(b)(4) Third Party Testing

(b)(4) Third Party Testing

(b)(4) Third Party Testing

(b)(4) Third Party Testing

(b)(4) Third Party Testing

(b)(4) Third Party Testing

(b)(4) Third Party Testing

(b)(4) Third Party Testing

(b)(4) Third Party Testing

(b)(4) Third Party Testing

(b)(4) Third Party Testing

(b)(4) Third Party Testing

(b)(4) Third Party Testing

(b)(4) Third Party Testing

(b)(4) Third Party Testing

(b)(4) Third Party Testing

(b)(4) Third Party Testing

(b)(4) Third Party Testing

(b)(4) Third Party Testing

(b)(4) Third Party Testing

(b)(4) Third Party Testing

(b)(4) Third Party Testing

(b)(4) Third Party Testing

(b)(4) Third Party Testing

(b)(4) Third Party Testing

(b)(4) Third Party Testing

(b)(4) Third Party Testing

(b)(4) Third Party Testing

(b)(4) Third Party Testing

(b)(4) Third Party Testing

(b)(4) Third Party Testing

(b)(4) Third Party Testing

(b)(4) Third Party Testing

(b)(4) Third Party Testing

(b)(4) Third Party Testing

(b)(4) Third Party Testing

(b)(4) Third Party Testing

(b)(4) Third Party Testing

(b)(4) Third Party Testing

(b)(4) Third Party Testing

(b)(4) Third Party Testing

(b)(4) Third Party Testing

(b)(4) Third Party Testing

(b)(4) Third Party Testing

(b)(4) Third Party Testing

(b)(4) Third Party Testing

(b)(4) Third Party Testing

(b)(4) Third Party Testing

(b)(4) Third Party Software Documentation

(b)(4) Third Party Software Documentation

(b)(4) Third Party Software Documentation

(b)(4) Third Party Software Documentation

(b)(4) Third Party Software Documentation

(b)(4) Third Party Software Documentation

(b)(4) Third Party Software Documentation

(b)(4) Third Party Software Documentation

(b)(4) Third Party Software Documentation

(b)(4) Third Party Software Documentation

(b)(4) Third Party Software Documentation

(b)(4) Third Party Software Documentation

(b)(4) Third Party Software Documentation

(b)(4) Third Party Software Documentation

(b)(4) Third Party Software Documentation

(b)(4) Third Party Software Documentation

(b)(4) Third Party Software Documentation

(b)(4) Third Party Software Documentation

(b)(4) Third Party Software Documentation

(b)(4) Third Party Software Documentation

(b)(4) Third Party Software Documentation

(b)(4) Third Party Software Documentation

(b)(4) Third Party Software Documentation

(b)(4) Third Party Software Documentation

(b)(4) Third Party Software Documentation

(b)(4) Third Party Software Documentation

(b)(4) Third Party Software Documentation

(b)(4) Third Party Software Documentation

(b)(4) Third Party Software Documentation

(b)(4) Third Party Software Documentation

(b)(4) Third Party Software Documentation

(b)(4) Third Party Software Documentation

(b)(4) Third Party Software Documentation

(b)(4) Third Party Software Documentation

(b)(4) Third Party Software Documentation

(b)(4) Third Party Software Documentation

(b)(4) Third Party Software Documentation

(b)(4) Third Party Software Documentation

(b)(4) Third Party Software Documentation

(b)(4) Third Party Software Documentation

(b)(4) Third Party Software Documentation

(b)(4) Third Party Software Documentation

(b)(4) Third Party Software Documentation

(b)(4) Third Party Software Documentation

(b)(4) Third Party Software Documentation

(b)(4) Third Party Software Documentation

(b)(4) Third Party Software Documentation

(b)(4) Third Party Software Documentation

(b)(4) Third Party Software Documentation

(b)(4) Third Party Software Documentation

(b)(4) Third Party Software Documentation

(b)(4) Third Party Software Documentation

(b)(4) Third Party Software Documentation

(b)(4) Third Party Software Documentation

(b)(4) Third Party Software Documentation

(b)(4) Third Party Software Documentation

(b)(4) Third Party Software Documentation

(b)(4) Third Party Testing

(b)(4) Third Party Testing

(b)(4) Third Party Testing

(b)(4) Third Party Testing

(b)(4) Third Party Testing

(b)(4) Third Party Testing

(b)(4) Third Party Testing

(b)(4) Third Party Testing

(b)(4) Third Party Testing

(b)(4) Third Party Testing

(b)(4) Third Party Testing

(b)(4) Third Party Testing

(b)(4) Third Party Testing

(b)(4) Third Party Testing

(b)(4) Third Party Testing

(b)(4) Third Party Testing

(b)(4) Third Party Testing

(b)(4) Third Party Testing

(b)(4) Third Party Testing

(b)(4) Third Party Testing

(b)(4) Third Party Testing

(b)(4) Third Party Testing

(b)(4) Third Party Testing

(b)(4) Third Party Testing

(b)(4) Third Party Testing

(b)(4) Third Party Testing

(b)(4) Third Party Testing

(b)(4) Third Party Testing

(b)(4) Third Party Testing

(b)(4) Third Party Testing

(b)(4) Third Party Testing

(b)(4) Third Party Testing

(b)(4) Third Party Testing

(b)(4) Third Party Testing

(b)(4) Third Party Testing

(b)(4) Third Party Testing

(b)(4) Third Party Testing

(b)(4) Third Party Testing

(b)(4) Third Party Testing

(b)(4) Third Party Testing

(b)(4) Third Party Testing

(b)(4) Third Party Testing

(b)(4) Third Party Testing

(b)(4) Third Party Testing

(b)(4) Third Party Testing

(b)(4) Third Party Testing

(b)(4) Third Party Testing

(b)(4) Third Party Testing

(b)(4) Third Party Testing

(b)(4) Third Party Testing

(b)(4) Third Party Testing

(b)(4) Third Party Testing

(b)(4) Third Party Testing

(b)(4) Third Party Testing

(b)(4) Third Party Testing

(b)(4) Third Party Testing

(b)(4) Third Party Testing

(b)(4) Third Party Testing

(b)(4) Third Party Testing

(b)(4) Third Party Testing

(b)(4) Third Party Testing

(b)(4) Third Party Testing

(b)(4) Third Party Testing

(b)(4) Third Party Testing

(b)(4) Third Party Testing

(b)(4) Third Party Testing

(b)(4) Third Party Testing

(b)(4) Third Party Testing

(b)(4) Third Party Testing

(b)(4) Third Party Testing

(b)(4) Third Party Testing

(b)(4) Third Party Testing

(b)(4) Third Party Testing

(b)(4) Third Party Testing

(b)(4) Third Party Testing

(b)(4) Third Party Testing

(b)(4) Third Party Testing

(b)(4) Third Party Testing

(b)(4) Third Party Testing

(b)(4) Third Party Testing

(b)(4) Third Party Testing

(b)(4) Third Party Testing

(b)(4) Third Party Testing

(b)(4) Third Party Testing

(b)(4) Third Party Testing

(b)(4) Third Party Testing

(b)(4) Third Party Testing

(b)(4) Third Party Testing

(b)(4) Third Party Testing

(b)(4) Third Party Testing

(b)(4) Third Party Testing

(b)(4) Third Party Testing

(b)(4) Third Party Testing

(b)(4) Third Party Testing

(b)(4) Third Party Testing

(b)(4) Third Party Testing

(b)(4) Third Party Testing

(b)(4) Third Party Testing

(b)(4) Third Party Testing

(b)(4) Third Party Testing

(b)(4) Third Party Testing

(b)(4) Third Party Testing

(b)(4) Third Party Testing

(b)(4) Third Party Testing

(b)(4) Third Party Testing

(b)(4) Third Party Testing

(b)(4) Third Party Testing

(b)(4) Third Party Testing

(b)(4) Third Party Testing

(b)(4) Third Party Testing

(b)(4) Third Party Testing

(b)(4) Third Party Testing

(b)(4) Third Party Testing

(b)(4) Third Party Testing

(b)(4) Third Party Testing

(b)(4) Third Party Testing

(b)(4) Third Party Testing

(b)(4) Third Party Testing

(b)(4) Third Party Testing

(b)(4) Third Party Testing

(b)(4) Third Party Testing

(b)(4) Third Party Testing

(b)(4) Third Party Testing

(b)(4) Third Party Testing

(b)(4) Third Party Testing

(b)(4) Third Party Testing

(b)(4) Third Party Testing

(b)(4) Third Party Testing

(b)(4) Third Party Testing

(b)(4) Third Party Testing

(b)(4) Third Party Testing

(b)(4) Third Party Testing

(b)(4) Third Party Testing

(b)(4) Third Party Testing

(b)(4) Third Party Testing

(b)(4) Third Party Testing

(b)(4) Third Party Testing

(b)(4) Third Party Testing

(b)(4) Third Party Testing

(b)(4) Third Party Testing

(b)(4) Third Party Testing

(b)(4) Third Party Testing

(b)(4) Third Party Testing

(b)(4) Third Party Testing

(b)(4) Third Party Testing

(b)(4) Third Party Testing

(b)(4) Third Party Testing

(b)(4) Third Party Testing

(b)(4) Third Party Testing

(b)(4) Third Party Testing

(b)(4) Third Party Testing

(b)(4) Third Party Testing

(b)(4) Third Party Testing

(b)(4) Third Party Testing

(b)(4) Third Party Testing

(b)(4) Third Party Testing

(b)(4) Third Party Testing

(b)(4) Third Party Testing

(b)(4) Third Party Testing

(b)(4) Third Party Testing

(b)(4) Third Party Testing

(b)(4) Third Party Testing

(b)(4) Third Party Testing

(b)(4) Third Party Testing

(b)(4) Third Party Testing

(b)(4) Third Party Testing

(b)(4) Third Party Testing

(b)(4) Third Party Testing

(b)(4) Third Party Testing

(b)(4) Third Party Testing

(b)(4) Third Party Testing

(b)(4) Third Party Testing

(b)(4) Third Party Testing

(b)(4) Third Party Testing

(b)(4) Third Party Testing

(b)(4) Third Party Testing

(b)(4) Third Party Testing

(b)(4) Third Party Testing

(b)(4) Third Party Testing

(b)(4) Third Party Testing

(b)(4) Third Party Testing

(b)(4) Third Party Testing

(b)(4) Third Party Testing

(b)(4) Third Party Testing

(b)(4) Third Party Testing

(b)(4) Third Party Testing

(b)(4) Third Party Testing

(b)(4) Third Party Testing

(b)(4) Third Party Testing

(b)(4) Third Party Testing

(b)(4) Third Party Testing

(b)(4) Third Party Testing

(b)(4) Third Party Testing

(b)(4) Third Party Testing

(b)(4) Third Party Testing

(b)(4) Third Party Testing

(b)(4) Third Party Testing

(b)(4) Third Party Testing

(b)(4) Third Party Testing

(b)(4) Third Party Testing

(b)(4) Third Party Testing

(b)(4) Third Party Testing

(b)(4) Third Party Testing

(b)(4) Third Party Testing

(b)(4) Third Party Testing

(b)(4) Third Party Testing

(b)(4) Third Party Testing

(b)(4) Third Party Testing