Records processed under FOIA Request #2015-1305; Released by CDRH on 05-11-2016. K130077

MAY 2 1 2013

Tab 5

510(K) Summary of Safety & Effectiveness

Official Contact	Frank Kadi Senior Regulatory Affairs Engineer Respironics, Inc. 1740 Golden Mile Highway Monroeville, PA 15146
Date Prepared	11 January 2013
Trade Name	REMstar SE
Common Name	CPAP System
Classification Name	ventilator, non-continuous (respirator) (21 CFR 868.5905, Product Code BZD)
Predicate Device	Respironics REMstar SE (K122769)
Reason for Submission	The modified device is the result of a material modifications made to the REMstar SE (K122769).

© 2013 Koninklijke Philips Electronics N.V. All Rights Reserved

Questions? Contact FDA/CDRH/OCE/DID at CDRH-FOISTATUS@fda.hhs.gov or call 301-796-8118.

Records processed under FOIA Request #2015-1305; Released by CDRH on 05-11-2016.

Substantial Equivalence

The modified device has the following similarities to the previously cleared predicate devices:

- Same intended use
- Same operating principle
- Same technology
- Same manufacturing process

Design verification tests were performed on the REMstar SE as a result of the risk analysis and product requirements. All tests were verified to meet the required acceptance criteria. Respironics has determined that the material modification has no impact on the safety and effectiveness of the device. In summary, the device described in this submission is substantially equivalent to the predicate device.

The modified device complies with the requirements of the following FDA Guidance Documents:

- FDA Reviewers Guidance for Premarket Notification Submissions (November 1993)
- FDA Reviewers Guidance for the Content of Premarket Submissions for Software Contained in Medical Devices (May 11, 2005)

Intended Use

The REMstar SE delivers positive airway pressure therapy for the treatment of Obstructive Sleep Apnea in spontaneously breathing patients weighing over 30kg (66 lbs). It is for use in the home or hospital/institutional environment.

Device Description

The REMstar SE is a microprocessor controlled blower based positive pressure system which is comprised of the therapy device, a heated humidifier and patient tubing (15mm, 22mm, or heated tubing).

The REMstar SE includes a CPAP mode only. While in CPAP mode, the device delivers a continuous positive airway pressure throughout the entire therapy session.

In addition to the CPAP therapy mode, the REMstar SE incorporates several optional features to aid with patient comfort. These features include ramp, adjustable pressure relief (FLEX technologies), and humidification. Humidification options include both a heated humidifier and heated tubing. The heated humidifier adjusts the level of humidification by varying the temperature of a heated plate used to heat up a chamber of water. Optional heated tubing can then be used to maintain that air at a desired temperature until it reaches the patient's mask.

The REMstar SE is intended for use with a patient circuit that connects the device to a patient interface device (mask). A typical patient circuit consists of patient tubing (15mm, 22mm, or heated tubing) and

© 2013 Koninklijke Philips Electronics N.V. All Rights Reserved

Questions? Contact FDA/CDRH/OCE/DID at CDRH-FOISTATUS@fda.hhs.gov or call 301-796-8118.

Records processed under FOIA Request #2015-1305; Released by CDRH on 05-11-2016.

an exhalation device (if one is not present in the mask). When a heated humidifier is attached to the therapy device, the patient circuit connects to the air outlet port of the heated humidifier.

Non-Clinical Tests

Verification activities performed to verify that the device modification did not affect the safety and effectiveness of the subject device included the following:

Material Evaluation

New materials used in the air flow path of the device have been verified to be acceptable for use through the following biocompatibility tests, in accordance with ISO 10993-1:

- Implantation (per ISO 10993-6)
- Genotoxicity (per ISO 10993-3)
- Irritation (per ISO 10993-10)
- Cytotoxicity (per ISO 10993-5)
- Sensitization (per ISO 10993-10)

The cleaning and disinfection methods identified in the product labeling were validated in order to demonstrate that the device is safe and effective for single-patient reuse and multi-patient use. Performance testing was completed to demonstrate the ability of the device to withstand the maximum number of recommended cleaning and disinfection cycles, and disinfection efficacy testing was performed to demonstrate the ability of the disinfection methods to disinfect the device. The device met the acceptance criteria for the performance tests after the maximum recommended cycles of cleaning and disinfection, and the disinfection methods were found to be effective.

Volatile Organic Compounds (VOC) testing was performed and demonstrated ability of modified device to meet established guidelines for the output of Volatile Organic Compounds (VOCs), carbon dioxide and carbon monoxide.

Clinical Tests

Clinical tests were not required to demonstrate the safety and effectiveness of the REMstar SE. Product functionality has been adequately assessed by non-clinical tests.

Conclusion

The REMstar SE has passed all of the aforementioned non-clinical tests and required no clinical tests in order to demonstrate safety or effectiveness. It is therefore concluded that the REMstar SE is substantially equivalent to the predicate device in terms of safety and effectiveness.

© 2013 Koninklijke Philips Electronics N.V. All Rights Reserved

Questions? Contact FDA/CDRH/OCE/DID at CDRH-FOISTATUS@fda.hhs.gov or call 301-796-8118.

Records processed under FOIA Request #2015-1305; Released by CDRH on 05-11-2016.

DEPARTMENT OF HEALTH & HUMAN SERVICES

Public Health Service

Food and Drug Administration
10903 New Hampshire Avenue
Document Control Center – WO66-G609
Silver Spring, MD 20993-0002

May 21, 2013

Mr. Frank Kadi
Senior Regulatory Affairs Engineer
Respironics, Incorporated
1740 Golden Mile Highway
MONROEVILLE PA 15146

Re: K130077
Trade/Device Name: REMstar SE
Regulation Number: 21 CFR 868.5905
Regulation Name: Noncontinuous Ventilator
Regulatory Class: II
Product Code: BZD
Dated: April 24, 2013
Received: April 25, 2013

Dear Mr. Kadi:

We have reviewed your Section 510(k) premarket notification of intent to market the device referenced above and have determined the device is substantially equivalent (for the indications for use stated in the enclosure) to legally marketed predicate devices marketed in interstate commerce prior to May 28, 1976, the enactment date of the Medical Device Amendments, or to devices that have been reclassified in accordance with the provisions of the Federal Food, Drug, and Cosmetic Act (Act) that do not require approval of a premarket approval application (PMA). You may, therefore, market the device, subject to the general controls provisions of the Act. The general controls provisions of the Act include requirements for annual registration, listing of devices, good manufacturing practice, labeling, and prohibitions against misbranding and adulteration. Please note: CDRH does not evaluate information related to contract liability warranties. We remind you, however, that device labeling must be truthful and not misleading.

If your device is classified (see above) into either class II (Special Controls) or class III (PMA), it may be subject to additional controls. Existing major regulations affecting your device can be found in the Code of Federal Regulations, Title 21, Parts 800 to 898. In addition, FDA may publish further announcements concerning your device in the Federal Register.

Questions? Contact FDA/CDRH/OCE/DID at CDRH-FOISTATUS@fda.hhs.gov or call 301-796-8118.

Records processed under FOIA Request #2015-1305; Released by CDRH on 05-11-2016.

Please be advised that FDA's issuance of a substantial equivalence determination does not mean that FDA has made a determination that your device complies with other requirements of the Act or any Federal statutes and regulations administered by other Federal agencies. You must comply with all the Act's requirements, including, but not limited to: registration and listing (21 CFR Part 807); labeling (21 CFR Part 801); medical device reporting (reporting of medical device-related adverse events) (21 CFR 803); good manufacturing practice requirements as set forth in the quality systems (QS) regulation (21 CFR Part 820); and if applicable, the electronic product radiation control provisions (Sections 531-542 of the Act); 21 CFR 1000-1050.

If you desire specific advice for your device on our labeling regulation (21 CFR Part 801), please contact the Division of Small Manufacturers, International and Consumer Assistance at its toll-free number (800) 638-2041 or (301) 796-7100 or at its Internet address http://www.fda.gov/MedicalDevices/ResourcesforYou/Industry/default.htm. Also, please note the regulation entitled, "Misbranding by reference to premarket notification" (21CFR Part 807.97). For questions regarding the reporting of adverse events under the MDR regulation (21 CFR Part 803), please go to http://www.fda.gov/MedicalDevices/Safety/ReportaProblem/default.htm for the CDRH's Office of Surveillance and Biometrics/Division of Postmarket Surveillance.

You may obtain other general information on your responsibilities under the Act from the Division of Small Manufacturers, International and Consumer Assistance at its toll-free number (800) 638-2041 or (301) 796-7100 or at its Internet address http://www.fda.gov/MedicalDevices/ResourcesforYou/Industry/default.htm.

Sincerely yours,

Kwame O. Ulmer for
-S

Anthony D. Watson, B.S., M.S., M.B.A.
Director
Division of Anesthesiology, General Hospital,
Respiratory, Infection Control and
Dental Devices
Office of Device Evaluation
Center for Devices and
Radiological Health

Enclosure

Questions? Contact FDA/CDRH/OCE/DID at CDRH-FOISTATUS@fda.hhs.gov or call 301-796-8118.

Records processed under FOIA Request #2015-1305; Released by CDRH on 05-11-2016.

510(k) Number (if known): K130077

Device Name: REMstar SE

Indications for Use:

The REMstar SE delivers positive airway pressure therapy for the treatment of Obstructive Sleep Apnea in spontaneously breathing patients weighing over 30kg (66 lbs). It is for use in the home or hospital/institutional environment.

Prescription Use ___✓___ **(Part 21 CFR 801 Subpart D)** **AND/OR** **Over-The-Counter Use** _____ **(Part 21 CFR 801 Subpart C)**

(PLEASE DO NOT WRITE BELOW THIS LINE – CONTINUE ON ANOTHER PAGE IF NEEDED)

Concurrence of CDRH, Office of Device Evaluation (ODE)

Paul H. Shin -S
2013.05.16 11:48:30 -04'00'

(Division Sign-Off)
Division of Anesthesiology, General Hospital Infection Control, Dental Devices

510(k) Number: K130077

Questions? Contact FDA/CDRH/OCE/DID at CDRH-FOISTATUS@fda.hhs.gov or call 301-796-8118.

Records processed under FOIA Request #2015-1305; Released by CDRH on 05-11-2016.

DEPARTMENT OF HEALTH & HUMAN SERVICES

Public Health Service

Food and Drug Administration
10903 New Hampshire Avenue
Document Control Center – WO66-G609
Silver Spring, MD 20993-0002

May 21, 2013

Mr. Frank Kadi
Senior Regulatory Affairs Engineer
Respironics, Incorporated
1740 Golden Mile Highway
MONROEVILLE PA 15146

Re: K130077
Trade/Device Name: REMstar SE
Regulation Number: 21 CFR 868.5905
Regulation Name: Noncontinuous Ventilator
Regulatory Class: II
Product Code: BZD
Dated: April 24, 2013
Received: April 25, 2013

Dear Mr. Kadi:

We have reviewed your Section 510(k) premarket notification of intent to market the device referenced above and have determined the device is substantially equivalent (for the indications for use stated in the enclosure) to legally marketed predicate devices marketed in interstate commerce prior to May 28, 1976, the enactment date of the Medical Device Amendments, or to devices that have been reclassified in accordance with the provisions of the Federal Food, Drug, and Cosmetic Act (Act) that do not require approval of a premarket approval application (PMA). You may, therefore, market the device, subject to the general controls provisions of the Act. The general controls provisions of the Act include requirements for annual registration, listing of devices, good manufacturing practice, labeling, and prohibitions against misbranding and adulteration. Please note: CDRH does not evaluate information related to contract liability warranties. We remind you, however, that device labeling must be truthful and not misleading.

If your device is classified (see above) into either class II (Special Controls) or class III (PMA), it may be subject to additional controls. Existing major regulations affecting your device can be found in the Code of Federal Regulations, Title 21, Parts 800 to 898. In addition, FDA may publish further announcements concerning your device in the Federal Register.

Questions? Contact FDA/CDRH/OCE/DID at CDRH-FOISTATUS@fda.hhs.gov or call 301-796-8118.

Records processed under FOIA Request #2015-1305; Released by CDRH on 05-11-2016.

Please be advised that FDA's issuance of a substantial equivalence determination does not mean that FDA has made a determination that your device complies with other requirements of the Act or any Federal statutes and regulations administered by other Federal agencies. You must comply with all the Act's requirements, including, but not limited to: registration and listing (21 CFR Part 807); labeling (21 CFR Part 801); medical device reporting (reporting of medical device-related adverse events) (21 CFR 803); good manufacturing practice requirements as set forth in the quality systems (QS) regulation (21 CFR Part 820); and if applicable, the electronic product radiation control provisions (Sections 531-542 of the Act); 21 CFR 1000-1050.

If you desire specific advice for your device on our labeling regulation (21 CFR Part 801), please contact the Division of Small Manufacturers, International and Consumer Assistance at its toll-free number (800) 638-2041 or (301) 796-7100 or at its Internet address http://www.fda.gov/MedicalDevices/ResourcesforYou/Industry/default.htm. Also, please note the regulation entitled, "Misbranding by reference to premarket notification" (21CFR Part 807.97). For questions regarding the reporting of adverse events under the MDR regulation (21 CFR Part 803), please go to http://www.fda.gov/MedicalDevices/Safety/ReportaProblem/default.htm for the CDRH's Office of Surveillance and Biometrics/Division of Postmarket Surveillance.

You may obtain other general information on your responsibilities under the Act from the Division of Small Manufacturers, International and Consumer Assistance at its toll-free number (800) 638-2041 or (301) 796-7100 or at its Internet address http://www.fda.gov/MedicalDevices/ResourcesforYou/Industry/default.htm.

Sincerely yours,

Kwame O. Ulmer for
-S

Anthony D. Watson, B.S., M.S., M.B.A.
Director
Division of Anesthesiology, General Hospital,
Respiratory, Infection Control and
Dental Devices
Office of Device Evaluation
Center for Devices and
Radiological Health

Enclosure

Questions? Contact FDA/CDRH/OCE/DID at CDRH-FOISTATUS@fda.hhs.gov or call 301-796-8118.

Records processed under FOIA Request #2015-1305; Released by CDRH on 05-11-2016.

Concurrence & Template History Page
[THIS PAGE IS INCLUDED IN IMAGE COPY ONLY]

Full Submission Number: K130077

For Office of Compliance Contact Information:

http://insideportlets.fda.gov:9010/portal/page?_pageid=197,415881&_dad=portal&_schema=PORTAL&org=318

For Office of Surveillance and Biometrics Contact Information:

http://insideportlets.fda.gov:9010/portal/page?_pageid=197,415881&_dad=portal&_schema=PORTAL&org=423

Digital Signature Concurrence Table	
Reviewer Sign-Off	Amy LeVelle
Branch Chief Sign-Off	Paul H Shin (Acting RPDB Branch Chief)
Division Sign-Off	Kwame O. Ulmer-S 2013.05.21 11:39:23 -04'00'

Template Name: K1(A) – SE after 1996

Template History:

Date of Update	By	Description of Update
7/27/09	Brandi Stuart	Added Updates to Boiler Table
8/7/09	Brandi Stuart	Updated HFZ Table
1/11/10	Diane Garcia	Liability/Warranty sentence added at bottom of 1st page
10/4/11	M. McCabe Janicki	Removed IFU sheet and placed in Forms
9/25/12	Edwena Jones	Added digital signature format
12/12/12	M. McCabe Janicki	Added an extra line between letter signature block and the word "Enclosure". Also, added a missing digit in 4-digit extension on letterhead zip code: "002" should be "0002".
4/2/2013	M. McCabe Janicki	Edited sentence that starts "If you desire specific advice for your device on our labeling regulation (21 CFR Part 801)…" Replaced broken Compliance link with general link to DSMICA.
4/12/2013	Margaret McCabe Janicki	Fixed a typo: Paragraph 1, final sentence, "We remind you, however; that device labeling must be truthful…" Replaced incorrect semicolon with a comma.

Records processed under FOIA Request #2015-1305; Released by CDRH on 05-11-2016.

510(k) Number (if known): K130077

Device Name: REMstar SE

Indications for Use:

The REMstar SE delivers positive airway pressure therapy for the treatment of Obstructive Sleep Apnea in spontaneously breathing patients weighing over 30kg (66 lbs). It is for use in the home or hospital/institutional environment.

Prescription Use ___✓___ **(Part 21 CFR 801 Subpart D)** **AND/OR** **Over-The-Counter Use** _____ **(Part 21 CFR 801 Subpart C)**

(PLEASE DO NOT WRITE BELOW THIS LINE – CONTINUE ON ANOTHER PAGE IF NEEDED)

Concurrence of CDRH, Office of Device Evaluation (ODE)

Paul H. Shin -S
2013.05.16 11:48:30 -04'00'

(Division Sign-Off)
Division of Anesthesiology, General Hospital Infection Control, Dental Devices

510(k) Number: K130077

Questions? Contact FDA/CDRH/OCE/DID at CDRH-FOISTATUS@fda.hhs.gov or call 301-796-8118.

Records processed under FOIA Request #2015-1305; Released by CDRH on 05-11-2016.

K130077

Cover Letter

Special 510(k): Device Modification

11 January 2013

Philips Respironics
1001 Murry Ridge Lane
Murrysville, PA, 15668

U.S. Food and Drug Administration
Center for Devices and Radiological Health
Document Mail Center - WO66-G609
10903 New Hampshire Avenue
Silver Spring, MD 20993-0002

FDA CDRH DMC
JAN 14 2013
Received

Reference: K122769 REMstar SE (Decision Date: October 9, 2012)

Dear Madam/Sir:

Respironics Inc. hereby submits this **Special 510(k): Device Modification** to request a material modification to our REMstar SE. We believe this modification is eligible for the Special 510(k) process since the fundamental scientific technology and intended use of the device have not changed.

(b)(4)

[redacted]

PHILIPS
RESPIRONICS

Questions? Contact FDA/CDRH/OCE/DID at CDRH-FOISTATUS@fda.hhs.gov or call 301-796-8118.

Records processed under FOIA Request #2015-1305; Released by CDRH on 05-11-2016.

Cover Letter

Special 510(k): Device Modification

(b)(4)

[redacted]

We consider our intent to market this device as confidential commercial information and request that it be treated as such by the FDA. We have taken precautions to protect the confidentiality of the intent to market this device. We understand that the submission to the government of false information is prohibited by 18 U.S.C. 1001 and 21 U.S.C. 331(q).

An eCopy has been provided in addition to the paper version. The eCopy is an exact duplicate of the paper copy except that the eCopy does not include page numbers.

Thank you in advance for your consideration of our application. If there are any questions, please fee to contact me at (724) 387-4134 or by email at Frank.Kadi@philips.com .

Sincerely,

Frank Kadi
Senior Regulatory Affairs Engineer

PHILIPS
RESPIRONICS

Questions? Contact FDA/CDRH/OCE/DID at CDRH-FOISTATUS@fda.hhs.gov or call 301-796-8118.

Records processed under FOIA Request #2015-1305; Released by CDRH on 05-11-2016.

Cover Letter

Special 510(k): Device Modification

11 January 2013

Philips Respironics
1001 Murry Ridge Lane
Murrysville, PA, 15668

U.S. Food and Drug Administration
Center for Devices and Radiological Health
Document Mail Center - WO66-G609
10903 New Hampshire Avenue
Silver Spring, MD 20993-0002

Reference: K122769 REMstar SE (Decision Date: October 9, 2012)

Dear Madam/Sir:

Respironics Inc. hereby submits this **Special 510(k): Device Modification** to request a material modification to our REMstar SE. We believe this modification is eligible for the Special 510(k) process since the fundamental scientific technology and intended use of the device have not changed.

(b)(4)

[redacted]

PHILIPS
RESPIRONICS

Questions? Contact FDA/CDRH/OCE/DID at CDRH-FOISTATUS@fda.hhs.gov or call 301-796-8118.

Records processed under FOIA Request #2015-1305; Released by CDRH on 05-11-2016.

Cover Letter

Special 510(k): Device Modification

(b)(4)

[redacted]

We consider our intent to market this device as confidential commercial information and request that it be treated as such by the FDA. We have taken precautions to protect the confidentiality of the intent to market this device. We understand that the submission to the government of false information is prohibited by 18 U.S.C. 1001 and 21 U.S.C. 331(q).

An eCopy has been provided in addition to the paper version. The eCopy is an exact duplicate of the paper copy except that the eCopy does not include page numbers.

Thank you in advance for your consideration of our application. If there are any questions, please fee to contact me at (724) 387-4134 or by email at Frank.Kadi@philips.com .

Sincerely,

Frank Kadi
Senior Regulatory Affairs Engineer

PHILIPS
RESPIRONICS

Questions? Contact FDA/CDRH/OCE/DID at CDRH-FOISTATUS@fda.hhs.gov or call 301-796-8118.

Records processed under FOIA Request #2015-1305; Released by CDRH on 05-11-2016.

Table Of Contents

REMstar SE

© 2013 Koninklijke Philips Electronics N.V. All Rights Reserved
Questions? Contact FDA/CDRH/OCE/DID at CDRH-FOISTATUS@fda.hhs.gov or call 301-796-8118.

Records processed under FOIA Request #2015-1305; Released by CDRH on 05-11-2016.

Acceptance Checklist
For Special 510(k)s

Note: Submission reference information is included for those criteria which are specific to a certain section or group of sections. This information has been included to assist the reviewer with their acceptance of this submission.

Special 510(k) Criteria The submission should not be reviewed as a Special 510(k) if "No" is selected for any of the 4 criteria below.				
		Yes	**No**	**Submission Reference (if applicable)**
1.	510(k) is submitted to modify a legally marketed device (predicate) AND the Special 510(k) submission is submitted by the holder of the 510(k) for the predicate device.	☒	☐	Refer to Cover Letter and CDRH Premarket Review Submission Cover Sheet.
2.	Indications for Use of the proposed device are unchanged from the legally marketed device (predicate).	☒	☐	Refer to Special 510(k) section under Intended Use and Tab 2.
3.	Fundamental scientific technology of the proposed device is unchanged from the legally marketed device (predicate).	☒	☐	Refer to Cover Letter and Special 510(k) section under Device Comparison.
4.	The submission includes only summary-level information (i.e., NO test reports with performance data). *Note that if performance data are provided and are conducted under design validation (21 CFR 820.30(g)), for example, to demonstrate continued conformance with a special control or recognized standard, then a Special 510(k) may be appropriate.*	☒	☐	Refer to Special 510(k) section under Device Modification and Verification Test Summary for Modification.

© 2013 Koninklijke Philips Electronics N.V. All Rights Reserved

Questions? Contact FDA/CDRH/OCE/DID at CDRH-FOISTATUS@fda.hhs.gov or call 301-796-8118.

Records processed under FOIA Request #2015-1305; Released by CDRH on 05-11-2016.

Organizational Elements Failure to include these items alone generally should not result in an RTA designation				
		Yes	**No**	**Submission Reference (if applicable)**
a.	Submission contains Table of Contents	☒	☐	Refer to Table of Contents (Page 3).
b.	Each section is labeled (e.g., headings or tabs designating Device Description section, Labeling section, etc.)	☒	☐	Headings and Tabs provided. Refer to Table of Contents (Page 3)
c.	All pages of the submission are numbered *All pages should be numbered in such a manner that information can be referenced by page number. This may be done either by consecutively numbering the entire submission, or numbering the pages within a section (e.g., 12-1, 12-2…).*	☒	☐	Refer to lower right corner of each page.
d.	Type of 510(k) is identified– traditional, abbreviated, or special *If type of 510(k) is not designated, review as a traditional*	☒	☐	Refer to Cover Letter and CDRH Premarket Review Submission Cover Sheet.

© 2013 Koninklijke Philips Electronics N.V. All Rights Reserved

Questions? Contact FDA/CDRH/OCE/DID at CDRH-FOISTATUS@fda.hhs.gov or call 301-796-8118.

Records processed under FOIA Request #2015-1305; Released by CDRH on 05-11-2016.

Elements of a Complete Submission (RTA Items) (21 CFR 807.87 unless otherwise indicated) Submission should be designated RTA if not addressed						
Check "Yes" if item is present, "N/A" if it is not needed and "No" if it is not included but needed.						
Any "No" answer will result in a "Refuse to Accept" decision. · Each element on the checklist should be addressed within the submission. The submitter may provide a rationale for omission for any criteria that are deemed not applicable. If a rationale is provided, the criterion is considered present (Yes). An assessment of the rationale will be considered during the review of the submission.				**Yes**	**N/A**	**No**	**Submission Reference (if applicable)**
A.	**Administrative**						
	1.		All content used to support the submission is written in English (including translations of test reports, literature articles, etc.)	☒		☐	
	2.		Submission identifies the following (such as in CDRH Premarket Review Submission Cover Sheet (Form 3514) or in 510(k) cover letter):	☒		☐	Refer to CDRH Premarket Review Submission Cover Sheet and Special 510(k) Section.
		a.	Device trade name or proprietary name	☒		☐	Refer to CDRH Premarket Review Submission Cover Sheet and Special 510(k) Section.
		b.	Device common name	☒		☐	Refer to CDRH Premarket Review Submission Cover Sheet and Special 510(k) Section.
		c.	Device class and panel or Classification regulation or Statement that device has not been classified with rationale for that conclusion.	☒		☐	Refer to CDRH Premarket Review Submission Cover Sheet and Special 510(k) Section.

© 2013 Koninklijke Philips Electronics N.V. All Rights Reserved

Questions? Contact FDA/CDRH/OCE/DID at CDRH-FOISTATUS@fda.hhs.gov or call 301-796-8118.

Records processed under FOIA Request #2015-1305; Released by CDRH on 05-11-2016.

Elements of a Complete Submission (RTA Items) (21 CFR 807.87 unless otherwise indicated) Submission should be designated RTA if not addressed						
Check "Yes" if item is present, "N/A" if it is not needed and "No" if it is not included but needed.						
Any "No" answer will result in a "Refuse to Accept" decision. · Each element on the checklist should be addressed within the submission. The submitter may provide a rationale for omission for any criteria that are deemed not applicable. If a rationale is provided, the criterion is considered present (Yes). An assessment of the rationale will be considered during the review of the submission.				**Yes**	**N/A**	**No**	**Submission Reference (if applicable)**
	3.	Submission contains Indications for Use Statement with Rx and/or OTC designated (see also and 801.109) *Submitter should use format appropriate for the reviewing Center/Office (CDRH/ODE, CDRH/OIVD, CBER/OBRR,CBER/OCTGT). If not provided in correct format, request the correct format during substantive review.*		☒		☐	Refer to Tab 2.
	4	Submission contains 510(k) Summary or 510(k) Statement *Either a) or b) must be answered "Yes" to be considered complete. Identify any missing element(s) as Comments.*		☒		☐	Refer to Tab 5.
		a.	Summary contains all elements per 21 CFR 807.92 *See also 510(k) Summary Checklist*	☒	☐	☐	Refer to Tab 5.
		b.	Statement contains all elements per 21 CFR 807.93	☐	☒	☐	
	5.	Submission contains Truthful and Accuracy Statement per 21 CFR 807.87(k) *See recommended format. Select "Yes" if statement is present, and includes the text in the recommended format, and is signed by a responsible person of the firm (not consultant).*		☒		☐	Refer to Tab 6.
	6.	Submission contains Class III Summary and Certification *See recommended content* *Form should be signed by a responsible person of the firm, not a consultant. Select "N/A" only if submission is not a Class III 510(k).*		☐	☒	☐	

© 2013 Koninklijke Philips Electronics N.V. All Rights Reserved

Questions? Contact FDA/CDRH/OCE/DID at CDRH-FOISTATUS@fda.hhs.gov or call 301-796-8118.

Records processed under FOIA Request #2015-1305; Released by CDRH on 05-11-2016.

Elements of a Complete Submission (RTA Items) (21 CFR 807.87 unless otherwise indicated) Submission should be designated RTA if not addressed						
Check "Yes" if item is present, "N/A" if it is not needed and "No" if it is not included but needed.						
Any "No" answer will result in a "Refuse to Accept" decision. · Each element on the checklist should be addressed within the submission. The submitter may provide a rationale for omission for any criteria that are deemed not applicable. If a rationale is provided, the criterion is considered present (Yes). An assessment of the rationale will be considered during the review of the submission.			**Yes**	**N/A**	**No**	**Submission Reference (if applicable)**
	7.	If submission references use of a national or international standard as part of demonstration of substantial equivalence, submission contains Standards Data Report for 510(k)s (FDA Form 3654) or includes detailed information about how and the extent to which the standard has been followed. *There should be a completed form for each referenced national or international standard.* *Select "N/A" only if submission does not reference any standards.*	☒	☐	☐	Refer to Tab 8.
	8.	The submission identifies prior submissions for the same device which FDA provided feedback related to the data or information needed to support substantial equivalence (e.g., submission numbers for Pre- Submission, IDE, prior not substantially equivalent (NSE) determination, prior 510(k) that was deleted or withdrawn) or states that there were no prior submissions for the subject device. *This information may be included in the Cover Letter (i.e., as a statement that there were no prior submissions for the device or a listing of the number(s) of the prior submissions). Alternatively, a list of submission numbers may be found in Section F (prior related submissions section) of the CDRH Coversheet form (Form 3514) to address this criterion. Please be advised that if this section of the form is left blank, it should not be considered a statement that there were no prior submissions.*	☒		☐	Refer to Cover Letter.

© 2013 Koninklijke Philips Electronics N.V. All Rights Reserved

Questions? Contact FDA/CDRH/OCE/DID at CDRH-FOISTATUS@fda.hhs.gov or call 301-796-8118.

Records processed under FOIA Request #2015-1305; Released by CDRH on 05-11-2016.

Elements of a Complete Submission (RTA Items) (21 CFR 807.87 unless otherwise indicated) Submission should be designated RTA if not addressed							
Check "Yes" if item is present, "N/A" if it is not needed and "No" if it is not included but needed.							
Any "No" answer will result in a "Refuse to Accept" decision. · Each element on the checklist should be addressed within the submission. The submitter may provide a rationale for omission for any criteria that are deemed not applicable. If a rationale is provided, the criterion is considered present (Yes). An assessment of the rationale will be considered during the review of the submission.				**Yes**	**N/A**	**No**	**Submission Reference (if applicable)**
		a.	If there were prior submissions, the submitter has identified where in the current submission any issues related to a determination of substantial equivalence outlined in prior communications are addressed. *To address this criterion, the submission may include a separate section with the prior submission number(s), a copy of the FDA feedback (e.g., letter, meeting minutes), and a statement of how or where in the submission this prior feedback was addressed. Note that the adequacy of how the feedback was addressed should be assessed during the substantive review.* For additional information regarding the Pre-Submission process, please refer to the Draft Guidance "Medical Devices: The Pre-Submission Program and Meetings with FDA Staff." (http://www.fda.gov/MedicalDevices/DeviceRegulationandGuidance/GuidanceDocuments/ucm310375.htm). Once finalized, this guidance will represent the Agency's current thinking on this topic. *Select "N/A" if the submitter states there were no prior submissions in criterion above.*	☒		☐	Refer to Cover Letter and Tab 10.
B.	**Device Description**						

© 2013 Koninklijke Philips Electronics N.V. All Rights Reserved

Questions? Contact FDA/CDRH/OCE/DID at CDRH-FOISTATUS@fda.hhs.gov or call 301-796-8118.

Records processed under FOIA Request #2015-1305; Released by CDRH on 05-11-2016.

Elements of a Complete Submission (RTA Items) (21 CFR 807.87 unless otherwise indicated) Submission should be designated RTA if not addressed							
Check "Yes" if item is present, "N/A" if it is not needed and "No" if it is not included but needed.							
Any "No" answer will result in a "Refuse to Accept" decision. · Each element on the checklist should be addressed within the submission. The submitter may provide a rationale for omission for any criteria that are deemed not applicable. If a rationale is provided, the criterion is considered present (Yes). An assessment of the rationale will be considered during the review of the submission.				**Yes**	**N/A**	**No**	**Submission Reference (if applicable)**
	9.	a.	If there are requirements regarding the device description, such as special controls, in a device-specific regulation that are applicable to the device, the submission includes device description information to establish that the submitter has followed the device-specific requirement. *Select "N/A" if there are no applicable requirements in a device-specific regulation. Select "No" if the submission does not include a rationale for any omitted information. Note that the adequacy of how such requirements have been addressed should be assessed during the substantive review.*	☐	☒	☐	
		b.	If there is a device-specific guidance, other than a special controls guidance document, applicable to the device, the submission includes device description information to establish that the submitter has addressed the recommendations or otherwise has met the applicable statutory or regulatory criteria through an alternative approach. *Select "N/A" if there is no applicable device-specific guidance.* *Select "No" if the submission does not include a rationale for any omitted information or any alternative approach as outlined above. Note that the adequacy of how recommendations in a device-specific guidance, etc., have been addressed should be assessed during the substantive review.*	☐	☒	☐	
	10.	Descriptive information is present and consistent within the submission (e.g., the device description section is consistent with the device description in the labeling), including:					

© 2013 Koninklijke Philips Electronics N.V. All Rights Reserved

Questions? Contact FDA/CDRH/OCE/DID at CDRH-FOISTATUS@fda.hhs.gov or call 301-796-8118.

Records processed under FOIA Request #2015-1305; Released by CDRH on 05-11-2016.

Elements of a Complete Submission (RTA Items) (21 CFR 807.87 unless otherwise indicated) Submission should be designated RTA if not addressed							
Check "Yes" if item is present, "N/A" if it is not needed and "No" if it is not included but needed.							
Any "No" answer will result in a "Refuse to Accept" decision. · Each element on the checklist should be addressed within the submission. The submitter may provide a rationale for omission for any criteria that are deemed not applicable. If a rationale is provided, the criterion is considered present (Yes). An assessment of the rationale will be considered during the review of the submission.				**Yes**	**N/A**	**No**	**Submission Reference (if applicable)**
		a.	A description of the principle of operation and mechanism of action for achieving the intended effect.	☒		☐	Refer to Tab 5 and Special 510(k) section under Device Description and Device Comparison.
		b.	A description of proposed conditions of use such as surgical technique for implants; anatomical location of use; user interface; how the device interacts with other devices; and/or how the device interacts with the patient.	☒		☐	Refer to Tab 5 and Special 510(k) section under Device Comparison.
		c.	A list and description of each device for which clearance is requested. *Select "N/A" if there is only one device or model. "Device" may refer to models, part numbers, or various sizes, etc.*	☒	☐	☐	Refer to Cover Letter, CDRH Premarket Review Submission Cover Sheet, and Special 510(k) section.
	11.	A description of all device modification(s) including rationale for each modification.		☒		☐	Refer to Special 510(k) section under Device Modification.

© 2013 Koninklijke Philips Electronics N.V. All Rights Reserved

Questions? Contact FDA/CDRH/OCE/DID at CDRH-FOISTATUS@fda.hhs.gov or call 301-796-8118.

Records processed under FOIA Request #2015-1305; Released by CDRH on 05-11-2016.

Elements of a Complete Submission (RTA Items) (21 CFR 807.87 unless otherwise indicated) Submission should be designated RTA if not addressed						
Check "Yes" if item is present, "N/A" if it is not needed and "No" if it is not included but needed.						
Any "No" answer will result in a "Refuse to Accept" decision. · Each element on the checklist should be addressed within the submission. The submitter may provide a rationale for omission for any criteria that are deemed not applicable. If a rationale is provided, the criterion is considered present (Yes). An assessment of the rationale will be considered during the review of the submission.				**Yes**	**N/A**	**No**	**Submission Reference (if applicable)**
	12.	Submission contains representative engineering drawing(s), schematics, illustrations and/or figures of the device that are clear, legible, labeled, and include dimensions. *In lieu of drawings, schematics, etc. of each device to be marketed, "representative" drawings, etc. may be provided, where "representative" is intended to mean that the drawings, etc. provided capture the differences in design, size, and other important characteristics of the various models, sizes, or versions of the device(s) to be marketed.* *Select "N/A" if the sponsor provided a rationale for why the submission does not contain engineering drawings, schematics, etc. (e.g., device is a reagent and figures are not pertinent to describe the device).*		☒	☐	☐	Refer to Special 510(k) section under Device Modification and Tab 1.
		Comments:					
	13.	If device is intended to be marketed with multiple components, accessories, and/or as part of a system, *Select "N/A" if the device is not intended to be marketed with multiple components, accessories, and/or as part of a system.*			☒		
		a.	Submission includes a list of all components and accessories to be marketed with the subject device.	☐		☐	
		b.	Submission includes a description (as detailed in item #12.a. and b. and 14 above) of each component or accessory. *Select "N/A" if the component(s)/accessory(ies) has been previously cleared, or is exempt, and the proposed indications for use are consistent with the cleared indications.*	☐	☐	☐	

© 2013 Koninklijke Philips Electronics N.V. All Rights Reserved

Questions? Contact FDA/CDRH/OCE/DID at CDRH-FOISTATUS@fda.hhs.gov or call 301-796-8118.

Records processed under FOIA Request #2015-1305; Released by CDRH on 05-11-2016.

Elements of a Complete Submission (RTA Items) (21 CFR 807.87 unless otherwise indicated) Submission should be designated RTA if not addressed							
Check "Yes" if item is present, "N/A" if it is not needed and "No" if it is not included but needed.							
Any "No" answer will result in a "Refuse to Accept" decision. · Each element on the checklist should be addressed within the submission. The submitter may provide a rationale for omission for any criteria that are deemed not applicable. If a rationale is provided, the criterion is considered present (Yes). An assessment of the rationale will be considered during the review of the submission.				**Yes**	**N/A**	**No**	**Submission Reference (if applicable)**
		c.	A 510(k) number is provided for each component or accessory that received a prior 510(k) clearance. *Select "N/A" if the submission states that the component(s)/accessory(ies) does not have a prior 510(k) clearance or the components/accessory(ies) is 510(k) exempt.*	☐	☐	☐	
C.	**Substantial Equivalence Discussion**						
	14.	Submitter has identified a predicate(s) device		☒		☐	Refer to Cover Letter, CDRH Premarket Review Submission Cover Sheet, and Special 510(k) section under Predicate Device Information.
		a.	Predicate's 510(k) number, trade name, and model number (if applicable) provided. For predicates that are preamendments devices, information is provided to document preamendments status. *Information regarding documenting preamendment status* is *available online (http://www.fda.gov/MedicalDevices/DeviceRegulationandGuidance/ComplianceActivities/ucm072746.htm)*.	☒		☐	Refer to CDRH Premarket Review Submission Cover Sheet section.

© 2013 Koninklijke Philips Electronics N.V. All Rights Reserved

Questions? Contact FDA/CDRH/OCE/DID at CDRH-FOISTATUS@fda.hhs.gov or call 301-796-8118.

Records processed under FOIA Request #2015-1305; Released by CDRH on 05-11-2016.

Elements of a Complete Submission (RTA Items) (21 CFR 807.87 unless otherwise indicated) Submission should be designated RTA if not addressed							
Check "Yes" if item is present, "N/A" if it is not needed and "No" if it is not included but needed.							
Any "No" answer will result in a "Refuse to Accept" decision. · Each element on the checklist should be addressed within the submission. The submitter may provide a rationale for omission for any criteria that are deemed not applicable. If a rationale is provided, the criterion is considered present (Yes). An assessment of the rationale will be considered during the review of the submission.				**Yes**	**N/A**	**No**	**Submission Reference (if applicable)**
		b.	The identified predicate(s) is consistent throughout the submission (i.e., the predicate(s) identified in the Substantial Equivalence section is the same as that listed in the 510(k) Summary (if applicable) and that used in comparative performance testing).	☒		☐	
	15.	Submission includes a comparison of the following for the predicate(s) and subject device					
		a.	Indications for use	☒		☐	Refer to Special 510(k) section under Device Comparison.
		b.	Technology, including features, materials, and principles of operation	☒		☐	Refer to Special 510(k) section under Device Comparison.

© 2013 Koninklijke Philips Electronics N.V. All Rights Reserved

Questions? Contact FDA/CDRH/OCE/DID at CDRH-FOISTATUS@fda.hhs.gov or call 301-796-8118.

Records processed under FOIA Request #2015-1305; Released by CDRH on 05-11-2016.

Elements of a Complete Submission (RTA Items) (21 CFR 807.87 unless otherwise indicated) Submission should be designated RTA if not addressed						
Check "Yes" if item is present, "N/A" if it is not needed and "No" if it is not included but needed.						
Any "No" answer will result in a "Refuse to Accept" decision. · Each element on the checklist should be addressed within the submission. The submitter may provide a rationale for omission for any criteria that are deemed not applicable. If a rationale is provided, the criterion is considered present (Yes). An assessment of the rationale will be considered during the review of the submission.				**Yes**	**N/A**	**No**	**Submission Reference (if applicable)**
	16.	Submission includes an analysis of why any differences between the subject device and predicate(s) do not render the device NSE (e.g., do not constitute a new intended use, and any differences in technological characteristics are accompanied by information that demonstrates the device is as safe and effective as the predicate and do not raise different questions of safety and effectiveness than the predicate) affect safety or effectiveness, or raise different questions of safety and effectiveness) (see section 513(i)(l)(A) of the FD&C Act) *If there is no difference between the subject and predicate(s with respect to the indications or technology), this should be explicitly stated, in which case "N/A" should be selected.* *Select "No" only if the submission does not include an analysis of differences as described above or a statement that there are no differences. Note that the adequacy of the analysis should be assessed during the substantive review; only the presence of such an analysis is required for acceptance.*		☐	☒	☐	Subject and predicate share same indications and technology. Refer to Cover Letter and Special 510(k) sections.
		Comments:					
D.	**Design Control Activities**						
	17.	Design Control Activities Summary includes all of the following:					
		a.	Identification of Risk Analysis methods(s) used to assess the impact of the modification on the device and its components AND the results of the analysis	☒		☐	Refer to Special 510(k) section under Device Modification.

© 2013 Koninklijke Philips Electronics N.V. All Rights Reserved

Questions? Contact FDA/CDRH/OCE/DID at CDRH-FOISTATUS@fda.hhs.gov or call 301-796-8118.

Records processed under FOIA Request #2015-1305; Released by CDRH on 05-11-2016.

Elements of a Complete Submission (RTA Items) (21 CFR 807.87 unless otherwise indicated) Submission should be designated RTA if not addressed							
Check "Yes" if item is present, "N/A" if it is not needed and "No" if it is not included but needed.							
Any "No" answer will result in a "Refuse to Accept" decision. · Each element on the checklist should be addressed within the submission. The submitter may provide a rationale for omission for any criteria that are deemed not applicable. If a rationale is provided, the criterion is considered present (Yes). An assessment of the rationale will be considered during the review of the submission.					**Yes**	**N/A**	**No**	**Submission Reference (if applicable)**
		b.	Based on the Risk Analysis, an identification of the verification and/or validation activities required, including methods or tests used and acceptance criteria.		☒		☐	Refer to Special 510(k) section under Device Modification.
		c.	Declaration of conformity with design controls, including: *All 3 must be present to answer "Yes."*		☒		☐	Refer to Tab 4.
			i.	Statement that all verification and validation activities were performed by designated individuals and results demonstrate that predetermined acceptance criteria were met.				Refer to Tab 4.
			ii.	Statement that manufacturing facility is in conformance with design control procedure requirements as specified in 21 CFR 820.30				Refer to Tab 4.
			iii.	Statement is signed by the individual responsible for these activities				Refer to Tab 4.
E.	**Proposed Labeling (see also 21 CFR part 801)**							
	18.	Submission includes proposed package labels, and labeling (e.g., instructions for use, package insert, operator's manual) that include a description of the device, its intended use, and the directions for use			☒		☐	Refer to Tab 1.
		a.	All changes in proposed labeling resulting from device modification(s) are highlighted or prominently identified.		☒		☐	No changes made to labeling. Refer to Tab 1 and Special 510(k) section under Labeling.

© 2013 Koninklijke Philips Electronics N.V. All Rights Reserved

Questions? Contact FDA/CDRH/OCE/DID at CDRH-FOISTATUS@fda.hhs.gov or call 301-796-8118.

Records processed under FOIA Request #2015-1305; Released by CDRH on 05-11-2016.

Elements of a Complete Submission (RTA Items) (21 CFR 807.87 unless otherwise indicated) Submission should be designated RTA if not addressed						
Check "Yes" if item is present, "N/A" if it is not needed and "No" if it is not included but needed.						
Any "No" answer will result in a "Refuse to Accept" decision. · Each element on the checklist should be addressed within the submission. The submitter may provide a rationale for omission for any criteria that are deemed not applicable. If a rationale is provided, the criterion is considered present (Yes). An assessment of the rationale will be considered during the review of the submission.			**Yes**	**N/A**	**No**	**Submission Reference (if applicable)**
	19.	Statement that the intended use of the modified device, as described in the labeling, has not changed as a result of the modification(s).	☒		☐	Refer to Special 510(k) section under Intended Use.

© 2013 Koninklijke Philips Electronics N.V. All Rights Reserved

Questions? Contact FDA/CDRH/OCE/DID at CDRH-FOISTATUS@fda.hhs.gov or call 301-796-8118.

Records processed under FOIA Request #2015-1305; Released by CDRH on 05-11-2016.

Form Approved: OMB No. 0910-511 Expiration Date: February 28, 2013. See Instructions for OMB Statement.

DEPARTMENT OF HEALTH AND HUMAN SERVICES FOOD AND DRUG ADMINISTRATION **MEDICAL DEVICE USER FEE COVER SHEET**	PAYMENT IDENTIFICATION NUMBER: (b)(4) [redacted] Write the Payment Identification number on your check.

A completed cover sheet must accompany each original application or supplement subject to fees. If payment is sent by U.S. mail or courier, please include a copy of this completed form with payment. Payment and mailing instructions can be found at: http://www.fda.gov/oc/mdufma/coversheet.html

1. COMPANY NAME AND ADDRESS (include name, street address, city state, country, and post office code)	2. CONTACT NAME
RESPIRONICS INC 1001 MURRY RIDGE LANE MURRYSVILLE PA 15668 US	Frank Kadi
1.1 EMPLOYER IDENTIFICATION NUMBER (EIN) *****4989	2.1 E-MAIL ADDRESS Frank.Kadi@philips.com
	2.2 TELEPHONE NUMBER (include Area code) 724-387-4134
	2.3 FACSIMILE (FAX) NUMBER (Include Area code) 724-387-7490

3. TYPE OF PREMARKET APPLICATION (Select one of the following in each column; if you are unsure, please refer to the application descriptions at the following web site: http://www.fda.gov/oc/mdufma

Select an application type:	3.1 Select a center
[X] Premarket notification(510(k)); except for third party	[X] CDRH
[ ] 513(g) Request for Information	[ ] CBER
[ ] Biologics License Application (BLA)	3.2 Select one of the types below
[ ] Premarket Approval Application (PMA)	[X] Original Application
[ ] Modular PMA	Supplement Types:
[ ] Product Development Protocol (PDP)	[ ] Efficacy (BLA)
[ ] Premarket Report (PMR)	[ ] Panel Track (PMA, PMR, PDP)
[ ] Annual Fee for Periodic Reporting (APR)	[ ] Real-Time (PMA, PMR, PDP)
[ ] 30-Day Notice	[ ] 180-day (PMA, PMR, PDP)

4. ARE YOU A SMALL BUSINESS? (See the instructions for more information on determining this status)

[ ] YES, I meet the small business criteria and have submitted the required qualifying documents to FDA

[X] NO, I am not a small business

4.1 If Yes, please enter your Small Business Decision Number:

5. FDA WILL NOT ACCEPT YOUR SUBMISSION IF YOUR COMPANY HAS NOT PAID AN ESTABLISHMENT REGISTRATION FEE THAT IS DUE TO FDA. HAS YOUR COMPANY PAID ALL ESTABLISHMENT REGISTRATION FEES THAT ARE DUE TO FDA?

Questions? Contact FDA/CDRH/OCE/DID at CDRH-FOISTATUS@fda.hhs.gov or call 301-796-8118.

Records processed under FOIA Request #2015-1305; Released by CDRH on 05-11-2016

[X] YES (All of our establishments have registered and paid the fee, or this is our first device, and we will register and pay the fee within 30 days of FDA's approval/clearance of this device.)

[ ] NO (If "NO," FDA will not accept your submission until you have paid all fees due to FDA. This submission will not be processed; see http://www.fda.gov/cdrh/mdufma for additional information)

6. IS THIS PREMARKET APPLICATION COVERED BY ANY OF THE FOLLOWING USER FEE EXCEPTIONS? IF SO, CHECK THE APPLICABLE EXCEPTION.

[ ] This application is the first PMA submitted by a qualified small business, including any affiliates

[ ] The sole purpose of the application is to support conditions of use for a pediatric population

[ ] This biologics application is submitted under section 351 of the Public Health Service Act for a product licensed for further manufacturing use only

[ ] The application is submitted by a state or federal government entity for a device that is not to be distributed commercially

7. IS THIS A SUPPLEMENT TO A PREMARKET APPLICATION FOR WHICH FEES WERE WAIVED DUE TO SOLE USE IN A PEDIATRIC POPULATION THAT NOW PROPOSES CONDITION OF USE FOR ANY ADULT POPULATION? (If so, the application is subject to the fee that applies for an original premarket approval application (PMA).

[ ] YES [X] NO

PAPERWORK REDUCTION ACT STATEMENT

Public reporting burden for this collection of information is estimated to average 18 minutes per response, including the time for reviewing instructions, searching existing data sources, gathering and maintaining the data needed, and completing and reviewing the collection of information. Send comments regarding this burden estimate or any other aspect of this collection of information, including suggestions for reducing this burden, to the address below.

Department of Health and Human Services, Food and Drug Administration, Office of Chief Information Officer, 1350 Piccard Drive, 4th Floor Rockville, MD 20850

[Please do NOT return this form to the above address, except as it pertains to comments on the burden estimate.]

8. USER FEE PAYMENT AMOUNT SUBMITTED FOR THIS PREMARKET APPLICATION

(b)(4) [redacted]

02-Jan-2013

Form FDA 3601 (01/2007)

"Close Window" Print Cover sheet

Records processed under FOIA Request #2015-1305; Released by CDRH on 05-11-2016

DEPARTMENT OF HEALTH AND HUMAN SERVICES
FOOD AND DRUG ADMINISTRATION

CDRH PREMARKET REVIEW SUBMISSION COVER SHEET

Form Approval
OMB No. 0910-0120
Expiration Date: December 31, 2013
See OMB Statement on page 5.

Date of Submission	User Fee Payment ID Number	FDA Submission Document Number *(if known)*
01-11-2013	(b)(4) [redacted]	

SECTION A — TYPE OF SUBMISSION

PMA	PMA & HDE Supplement	PDP	510(k)	Meeting
☐ Original Submission	☐ Regular (180 day)	☐ Original PDP	☒ Original Submission:	☐ Pre-510(K) Meeting
☐ Premarket Report	☐ Special	☐ Notice of Completion	☐ Traditional	☐ Pre-IDE Meeting
☐ Modular Submission	☐ Panel Track (PMA Only)	☐ Amendment to PDP	☒ Special	☐ Pre-PMA Meeting
☐ Amendment	☐ 30-day Supplement		☐ Abbreviated (Complete section I, Page 5)	☐ Pre-PDP Meeting
☐ Report	☐ 30-day Notice		☐ Additional Information	☐ Day 100 Meeting
☐ Report Amendment	☐ 135-day Supplement		☐ Third Party	☐ Agreement Meeting
☐ Licensing Agreement	☐ Real-time Review			☐ Determination Meeting
	☐ Amendment to PMA & HDE Supplement			☐ Other *(specify)*:
	☐ Other			

IDE	Humanitarian Device Exemption (HDE)	Class II Exemption Petition	Evaluation of Automatic Class III Designation (De Novo)	Other Submission
☐ Original Submission	☐ Original Submission	☐ Original Submission	☐ Original Submission	☐ 513(g)
☐ Amendment	☐ Amendment	☐ Additional Information	☐ Additional Information	☐ Other *(describe submission)*:
☐ Supplement	☐ Supplement			
	☐ Report			
	☐ Report Amendment			

Have you used or cited Standards in your submission? ☒ Yes ☐ No *(If Yes, please complete Section I, Page 5)*

SECTION B — SUBMITTER, APPLICANT OR SPONSOR

Company / Institution Name: Respironics Inc.	Establishment Registration Number *(if known)*: 2518422		
Division Name *(if applicable)*:	Phone Number *(including area code)*: 724-387-4134		
Street Address: 1001 Murry Ridge Lane	FAX Number *(including area code)*: 724-387-7490		
City: Murrysville	State / Province: PA	ZIP/Postal Code: 15668	Country: USA
Contact Name: Frank Kadi			
Contact Title: Senior Regulatory Affairs Engineer	Contact E-mail Address: Frank.Kadi@philips.com		

SECTION C — APPLICATION CORRESPONDENT (e.g., consultant, if different from above)

Company / Institution Name: Respironics Inc.			
Division Name *(if applicable)*:	Phone Number *(including area code)*: 724-387-4134		
Street Address: 1740 Golden Mile Highway	FAX Number *(including area code)*: 724-387-7490		
City: Monroeville	State / Province: PA	ZIP Code: 15146	Country: USA
Contact Name: Frank Kadi			
Contact Title: Senior Regulatory Affairs Engineer	Contact E-mail Address: Frank.Kadi@philips.com		

PSC Graphics: (301) 443-6740 EF

Questions? Contact FDA/CDRH/OCE/DID at CDRH-FOISTATUS@fda.hhs.gov or call 301-796-8118.

SECTION D1 — REASON FOR APPLICATION - PMA, PDP, OR HDE

- [ ] New Device
- [ ] Withdrawal
- [ ] Additional or Expanded Indications
- [ ] Request for Extension
- [ ] Post-approval Study Protocol
- [ ] Request for Applicant Hold
- [ ] Request for Removal of Applicant Hold
- [ ] Request to Remove or Add Manufacturing Site

- [ ] Process change:
  - [ ] Manufacturing
  - [ ] Packaging
  - [ ] Sterilization
  - [ ] Other *(specify below)*

- [ ] Response to FDA correspondence:

- [ ] Change in design, component, or specification:
  - [ ] Software / Hardware
  - [ ] Color Additive
  - [ ] Material
  - [ ] Specifications
  - [ ] Other *(specify below)*

- [ ] Labeling change:
  - [ ] Indications
  - [ ] Instructions
  - [ ] Performance Characteristics
  - [ ] Shelf Life
  - [ ] Trade Name
  - [ ] Other *(specify below)*

- [ ] Location change:
  - [ ] Manufacturer
  - [ ] Sterilizer
  - [ ] Packager

- [ ] Report Submission:
  - [ ] Annual or Periodic
  - [ ] Post-approval Study
  - [ ] Adverse Reaction
  - [ ] Device Defect
  - [ ] Amendment

- [ ] Change in Ownership
- [ ] Change in Correspondent
- [ ] Change of Applicant Address

- [ ] Other Reason *(specify)*:

SECTION D2 — REASON FOR APPLICATION - IDE

- [ ] New Device
- [ ] New Indication
- [ ] Addition of Institution
- [ ] Expansion / Extension of Study
- [ ] IRB Certification
- [ ] Termination of Study
- [ ] Withdrawal of Application
- [ ] Unanticipated Adverse Effect
- [ ] Notification of Emergency Use
- [ ] Compassionate Use Request
- [ ] Treatment IDE
- [ ] Continued Access

- [ ] Change in:
  - [ ] Correspondent / Applicant
  - [ ] Design / Device
  - [ ] Informed Consent
  - [ ] Manufacturer
  - [ ] Manufacturing Process
  - [ ] Protocol - Feasibility
  - [ ] Protocol - Other
  - [ ] Sponsor

- [ ] Report submission:
  - [ ] Current Investigator
  - [ ] Annual Progress Report
  - [ ] Site Waiver Report
  - [ ] Final

- [ ] Response to FDA Letter Concerning:
  - [ ] Conditional Approval
  - [ ] Deemed Approved
  - [ ] Deficient Final Report
  - [ ] Deficient Progress Report
  - [ ] Deficient Investigator Report
  - [ ] Disapproval
  - [ ] Request Extension of Time to Respond to FDA
  - [ ] Request Meeting
  - [ ] Request Hearing

- [ ] Other Reason *(specify)*:

SECTION D3 — REASON FOR SUBMISSION - 510(k)

- [ ] New Device
- [ ] Additional or Expanded Indications
- [ ] Change in Technology

- [x] Other Reason *(specify)*:

Modification to existing device (material change)

Questions? Contact FDA/CDRH/OCE/DID at CDRH-FOISTATUS@fda.hhs.gov or call 301-796-8118.

SECTION E — ADDITIONAL INFORMATION ON 510(K) SUBMISSIONS

Product codes of devices to which substantial equivalence is claimed

1	BZD	2		3		4	
5		6		7		8	

Summary of, or statement concerning, safety and effectiveness information

- [x] 510 (k) summary attached
- [ ] 510 (k) statement

Information on devices to which substantial equivalence is claimed *(if known)*

	510(k) Number		*Trade or Proprietary or Model Name*		*Manufacturer*
1	K122769	1	REMstar SE	1	Respironics Inc.
2		2		2	
3		3		3	
4		4		4	
5		5		5	
6		6		6	

SECTION F — PRODUCT INFORMATION - APPLICATION TO ALL APPLICATIONS

Common or usual name or classification name

non-continuous ventilator

	Trade or Proprietary or Model Name for This Device		Model Number
1	REMstar SE	1	Undetermined
2		2	
3		3	
4		4	
5		5	

FDA document numbers of all prior related submissions *(regardless of outcome)*

1	2	3	4	5	6
7	8	9	10	11	12

Data Included in Submission

- [ ] Laboratory Testing
- [ ] Animal Trials
- [ ] Human Trials

SECTION G — PRODUCT CLASSIFICATION - APPLICATION TO ALL APPLICATIONS

Product Code	C.F.R. Section *(if applicable)*	Device Class
BZD	21 CFR 868.5905	[ ] Class I [x] Class II
Classification Panel: Anesthesiology		[ ] Class III [ ] Unclassified

Indications *(from labeling)*

The REMstar SE delivers positive airway pressure therapy for the treatment of Obstructive Sleep Apnea in spontaneously breathing patients weighing over 30 kg (66 lbs). It is for use in the home or hospital/institutional environment.

Questions? Contact FDA/CDRH/OCE/DID at CDRH-FOISTATUS@fda.hhs.gov or call 301-796-8118.

Records processed under FOIA Request #2015-1305. Released by CDRH on 05-11-2016.

Note: Submission of this information does not affect the need to submit a 2891 or 2891a Device Establishment Registration form.

SECTION H — MANUFACTURING / PACKAGING / STERILIZATION SITES RELATING TO A SUBMISSION

☒ Original ☐ Add ☐ Delete	Facility Establishment Identifier (FEI) Number	☒ Manufacturer ☐ Contract Sterilizer ☐ Contract Manufacturer ☐ Repackager / Relabeler
Company / Institution Name: Respironics Inc.		Establishment Registration Number: 3007220521
Division Name *(if applicable)*		Phone Number *(including area code)*: 724-387-4134
Street Address: 312 Alvin Drive		FAX Number *(including area code)*: 724-387-7490
City: New Kensington		State / Province: PA; ZIP Code: 15068; Country: USA
Contact Name: Frank Kadi	Contact Title: Senior Regulatory Affairs Engineer	Contact E-mail Address: Frank.Kadi@philips.com

☐ Original ☐ Add ☐ Delete	Facility Establishment Identifier (FEI) Number	☐ Manufacturer ☐ Contract Sterilizer ☐ Contract Manufacturer ☐ Repackager / Relabeler
Company / Institution Name		Establishment Registration Number
Division Name *(if applicable)*		Phone Number *(including area code)*
Street Address		FAX Number *(including area code)*
City		State / Province; ZIP Code; Country
Contact Name	Contact Title	Contact E-mail Address

☐ Original ☐ Add ☐ Delete	Facility Establishment Identifier (FEI) Number	☐ Manufacturer ☐ Contract Sterilizer ☐ Contract Manufacturer ☐ Repackager / Relabeler
Company / Institution Name		Establishment Registration Number
Division Name *(if applicable)*		Phone Number *(including area code)*
Street Address		FAX Number *(including area code)*
City		State / Province; ZIP Code; Country
Contact Name	Contact Title	Contact E-mail Address

Questions? Contact FDA/CDRH/OCE/DID at CDRH-FOISTATUS@fda.hhs.gov or call 301-796-8118.

SECTION I UTILIZATION OF STANDARDS

Note: Complete this section if your application or submission cites standards or includes a *"Declaration of Conformity to a Recognized Standard"* statement.

	Standards No.	Standards Organization	Standards Title	Version	Date
1	14971	ISO	Medical devices - Application of risk management to medical devices	2007	08/20/2012
2	10993-1	ISO	Biological evaluation of medical devices - Part 1: Evaluation and testing within a risk management process	2009	10/04/2010
3	10993-18	ISO	Biological evaluation of medical devices - Part 18: Chemical characterization of materials	2005	07/01/2005
4					
5					
6					
7					

Please include any additional standards to be cited on a separate page.

Public reporting burden for this collection of information is estimated to average 0.5 hour per response, including the time for reviewing instructions, searching existing data sources, gathering and maintaining the data needed, and completing reviewing the collection of information. Send comments regarding this burden estimate or any other aspect of this collection of information, including suggestions for reducing this burden to:

Department of Health and Human Services
Food and Drug Administration
Office of Chief Information Officer
1350 Piccard Drive, Room 400
Rockville, MD 20850

An agency may not conduct or sponsor, and a person is not required to respond to, a collection of information unless it displays a currently valid OMB control number.

Questions? Contact FDA/CDRH/OCE/DID at CDRH-FOISTATUS@fda.hhs.gov or call 301-796-8118.

Records processed under FOIA Request #2015-1305. Released by CDRH on 05-11-2016.

DEPARTMENT OF HEALTH AND HUMAN SERVICES
Food and Drug Administration

Certification of Compliance, under 42 U.S.C. § 282(j)(5)(B), with Requirements of ClinicalTrials.gov Data Bank (42 U.S.C. § 282(j))

(For submission with an application/submission, including amendments, supplements, and resubmissions, under §§ 505, 515, 520(m), or 510(k) of the Federal Food, Drug, and Cosmetic Act or § 351 of the Public Health Service Act.)

SPONSOR / APPLICANT / SUBMITTER INFORMATION

1. NAME OF SPONSOR/APPLICANT/SUBMITTER
Frank Kadi

2. DATE OF THE APPLICATION/SUBMISSION WHICH THIS CERTIFICATION ACCOMPANIES
Jan 11, 2013

3. ADDRESS *(Number, Street, State, and ZIP Code)*
1001 Murry Ridge Lane
Murrysville, PA 15668

4. TELEPHONE AND FAX NUMBERS *(Include Area Code)*
(Tel.) 724-387-4134
(Fax) 724-387-7490

PRODUCT INFORMATION

5. **FOR DRUGS/BIOLOGICS:** Include Any/All Available Established, Proprietary and/or Chemical/Biochemical/Blood/Cellular/Gene Therapy Product Name(s)
FOR DEVICES: Include Any/All Common or Usual Name(s), Classification, Trade or Proprietary or Model Name(s) and/or Model Number(s)
(Attach extra pages as necessary)

REMstar SE

APPLICATION / SUBMISSION INFORMATION

6. TYPE OF APPLICATION/SUBMISSION WHICH THIS CERTIFICATION ACCOMPANIES

☐ IND ☐ NDA ☐ ANDA ☐ BLA ☐ PMA ☐ HDE ☒ 510(k) ☐ PDP ☐ Other

7. INCLUDE IND/NDA/ANDA/BLA/PMA/HDE/510(k)/PDP/OTHER NUMBER *(If number previously assigned)*

8. SERIAL NUMBER ASSIGNED TO APPLICATION/SUBMISSION WHICH THIS CERTIFICATION ACCOMPANIES

CERTIFICATION STATEMENT / INFORMATION

9. CHECK ONLY ONE OF THE FOLLOWING BOXES *(See instructions for additional information and explanation)*

☒ A. I certify that the requirements of 42 U.S.C. § 282(j), Section 402(j) of the Public Health Service Act, enacted by 121 Stat. 823, Public Law 110-85, do not apply because the application/submission which this certification accompanies does not reference any clinical trial.

☐ B. I certify that the requirements of 42 U.S.C. § 282(j), Section 402(j) of the Public Health Service Act, enacted by 121 Stat. 823, Public Law 110-85, do not apply to any clinical trial referenced in the application/submission which this certification accompanies.

☐ C. I certify that the requirements of 42 U.S.C. § 282(j), Section 402(j) of the Public Health Service Act, enacted by 121 Stat. 823, Public Law 110-85, apply to one or more of the clinical trials referenced in the application/submission which this certification accompanies and that those requirements have been met.

10. IF YOU CHECKED BOX C, IN NUMBER 9, PROVIDE THE NATIONAL CLINICAL TRIAL (NCT) NUMBER(S) FOR ANY "APPLICABLE CLINICAL TRIAL(S)," UNDER 42 U.S.C. § 282(j)(1)(A)(i), SECTION 402(j)(1)(A)(i) OF THE PUBLIC HEALTH SERVICE ACT, REFERENCED IN THE APPLICATION/ SUBMISSION WHICH THIS CERTIFICATION ACCOMPANIES *(Attach extra pages as necessary)*

NCT Number(s):

The undersigned declares, to the best of her/his knowledge, that this is an accurate, true, and complete submission of information. I understand that the failure to submit the certification required by 42 U.S.C. § 282(j)(5)(B), section 402(j)(5)(B) of the Public Health Service Act, and the knowing submission of a false certification under such section are prohibited acts under 21 U.S.C. § 331, section 301 of the Federal Food, Drug, and Cosmetic Act.
Warning: A willfully and knowingly false statement is a criminal offense, U.S. Code, title 18, section 1001.

11. SIGNATURE OF SPONSOR/APPLICANT/SUBMITTER OR AN AUTHORIZED REPRESENTATIVE (Sign)

12. NAME AND TITLE OF THE PERSON WHO SIGNED IN NO. 11
(Name) Frank Kadi
(Title) Senior Regulatory Affairs Engineer

13. ADDRESS *(Number, Street, State, and ZIP Code) (of person identified in Nos. 11 and 12)*
1740 Golden Mile Highway
Monroeville, PA 15146

14. TELEPHONE AND FAX NUMBERS *(Include Area Code)*
(Tel.) 724-387-4134
(Fax) 724-387-7490

15. DATE OF CERTIFICATION
Jan 11, 2013

Questions? Contact FDA/CDRH/OCE/DID at CDRH-FOISTATUS@fda.hhs.gov or call 301-796-8118.

Records processed under FOIA Request #2015-1305 Released by CDRH on 05-11-2016.

Instructions for Completion of Form FDA 3674

Certification of Compliance, under 42 U.S.C. § 282(j)(5)(B), with Requirements of ClinicalTrials.gov Data Bank (42 U.S.C. § 282(j))
Form 3674 must accompany an application/submission, including amendments, supplements, and resubmissions, submitted under §§ 505, 515, 520(m), or 510(k) of the Federal Food, Drug, and Cosmetic Act or § 351 of the Public Health Service Act.

1. **Name of Sponsor/Applicant/Submitter** - This is the name of the sponsor/applicant/submitter of the drug/biologic/device application/ submission which the certification accompanies. The name must be identical to that listed on the application/submission.
2. **Date** - This is the date of the application/submission which the certification accompanies.
3. **& 4.** - Provide complete address, telephone number and fax number of the sponsor/applicant/submitter.
5. **Product Information - For Drugs/Biologics:** Provide the established, proprietary name, and/or chemical/biochemical/blood product/ cellular/gene therapy name(s) for the product covered by the application/submission. Include all available names by which the product is known. **For Devices:** Provide the common or usual name, classification, trade or proprietary or model name(s), and/or model number(s). Include all available names/model numbers by which the product is known.
6. **Type of Application/Submission** - Identify the type of application/submission which the certification accompanies by checking the appropriate box. If the name of the type of application/submission is not identified, check the box labeled "Other."
7. **IND/NDA/ANDA/BLA/PMA/HDE/510(k)/PDP/Other Number** - If FDA has previously assigned a number associated with the application/ submission which this certification accompanies, list that number in this field. For example, if the application/submission accompanied by this certification is an IND protocol amendment and the IND number has already been issued by FDA, that number should be provided in this field.
8. **Serial Number** - In some instances a sequential serial number is assigned to the application. If there is such a serial number, provide it in this field. If there is no such number, leave this field blank.
9. **Certification** - This section contains three different check-off boxes.

   Box A should be checked if the sponsor/applicant/submitter has concluded that the requirements of 42 U.S.C. § 282(j), section 402(j) of the Public Health Service Act, do not apply because no clinical trials are included, relied upon, or otherwise referred to, in the application/ submission which the certification accompanies.

   Box B should be checked if the sponsor/applicant/submitter has concluded that the requirements of 42 U.S.C. § 282(j), section 402(j) of the Public Health Service Act, do not apply at the time of submission of the certification to any clinical trials that are included, relied upon, or otherwise referred to, in the application/submission which the certification accompanies. This means that, even though some or all of the clinical trials included, relied upon, or otherwise referred to in the application/submission may be "applicable clinical trials" under 42 U.S.C. § 282(j)(1)(A)(i), section 402(j)(1)(A)(i) of the Public Health Service Act, on the date the certification is signed, 42 U.S.C. § 282(j), section 402(j) of the Public Health Service Act, does not require that any information be submitted to the ClinicalTrials.gov Data Bank with respect to those clinical trials.

   Box C should be checked if the sponsor/applicant/submitter has concluded that the requirements of 42 U.S.C. § 282(j), section 402(j) of the Public Health Service Act, do apply, on the date the certification is signed, to some or all of the clinical trials that are included, relied upon, or otherwise referred to, in the application/submission which the certification accompanies. This means that, as of the date the certification is signed, the requirements of 42 U.S.C. § 282(j), section 402(j) of the Public Health Service Act, apply to one or more of the clinical trials included, relied upon, or otherwise referred to, in the application/submission which this certification accompanies.
10. **National Clinical Trial (NCT) Numbers** - If you have checked Box C in number 9 (Certification), provide the NCT Number obtained from www.ClinicalTrials.gov for each clinical trial that is an "applicable clinical trial" under 42 U.S.C. § 282(j)(1)(A)(i), section 402(j)(1)(A)(i) of the Public Health Service Act, and that is included, relied upon, or otherwise referred to, in the application/submission which the certification accompanies. Type only the number, as the term "NCT" will be added automatically before number. Include any and all NCT numbers that, as of the date the certification is signed, have been assigned to the clinical trials included, relied upon, or otherwise referred to, in the application/submission which this certification accompanies. Multiple NCT numbers may be required for a particular certification, depending on the number of "applicable clinical trials" included, relied upon, or otherwise referred to, in the application/submission which the certification accompanies. Leave this field blank if you have checked Box 9.C but, at the time the certification is completed, you have not yet received any NCT numbers for the "applicable clinical trial(s)" included, relied upon, or otherwise referred to in the application/ submission.
11. **Signature of Sponsor/Applicant/Submitter or an Authorized Representative** - The person signing the certification must sign in this field.
12. **Name and Title of Person Who Signed in number 11** - Include the name and title of the person who is signing the certification. If the person signing the certification is not the sponsor/applicant/submitter of the application/submission, he or she must be an authorized representative of the sponsor/applicant/submitter.
13. **& 14.** - Provide the full address, telephone and fax numbers of the person who is identified in number 11 and signs the certification in number 11.
15. Provide the date the certification is signed. This date may be different from the date provided in number 2.

Paperwork Reduction Act Statement

Public reporting burden for this collection of information is estimated to average 15 minutes and 45 minutes (depending on the type of application/submission) per response, including time for reviewing instructions. Send comments regarding this burden estimate or any other aspect of this collection of information, including suggestions for reducing this burden, to the address below.

Department of Health and Human Services
Food and Drug Administration
Office of Chief Information Officer
1350 Piccard Drive, Room 400
Rockville, MD 20850

An agency may not conduct or sponsor, and a person is not required to respond to, a collection of information, unless it displays a currently valid OMB control number.

Questions? Contact FDA/CDRH/OCE/DID at CDRH-FOISTATUS@fda.hhs.gov or call 301-796-8118.

Records processed under FOIA Request #2015-1305; Released by CDRH on 05-11-2016.

Special 510(k)

REMstar SE

Device Trade Name	REMstar SE
Common/Usual Name	CPAP System
Manufacturer's Establishment Registration Number	3007220521
Manufacturer's Address	312 Alvin Drive, New Kensington, PA 15068
Device Classification	Class: II Classification Panel: Anesthesiology Devices Classification Reference : 21 CFR 868.5905 Product Code: BZD
Predicate Device Information	Respironics REMstar SE (K122769)
Labeling	Draft Labeling can be found in Tab 1. The provided labeling is unchanged from the predicate REMstar SE (K122769).
Intended Use	The REMstar SE delivers positive airway pressure therapy for the treatment of Obstructive Sleep Apnea in spontaneously breathing patients weighing over 30kg (66 lbs). It is for use in the home or hospital/institutional environment. The Statement of Indications of Use can be found in Tab 2. The intended use of the modified REMstar SE, as described in the draft labeling provided in Tab 1, has not changed as a result of the modification.

© 2013 Koninklijke Philips Electronics N.V. All Rights Reserved
Questions? Contact FDA/CDRH/OCE/DID at CDRH-FOISTATUS@fda.hhs.gov or call 301-796-8118.

Records processed under FOIA Request #2015-1305; Released by CDRH on 05-11-2016.

Device Description

The REMstar SE submitted under this premarket notification will be the result of a modification to the REMstar SE (K122769). The modifications described below are accomplished via a material change only. The purpose of this modification is to change the aesthetics of the device in order to differentiate it from other devices of a similar design.

The following paragraph provides a summary of the modification:

Modification 1: Modification to device enclosure materials
The purpose of this modification is to change the appearance of the device slightly in order to differentiate it from other devices. This involves two material changes which are achieved through the use of existing base materials found in the predicate device but which are now incorporate new colorants.

In accordance with the FDA Reviewer's Guidance for Premarket Notification Submissions (November 1993), a device description checklist has been provided in Tab 3. All items addressed by the checklist are unchanged from the REMstar SE (K122769).

Substantial Equivalence

The modified REMstar SE submitted under this premarket notification is substantially equivalent to the REMstar SE (K122769). The modified REMstar SE, like the predicate, is intended to deliver positive airway pressure therapy for the treatment of Obstructive Sleep Apnea in spontaneously breathing patients weighing over 30kg (66 lbs). The material modification introduced with this submission is based on existing base materials incorporated with new colorants.

Table 1 below provides a summary of the device parameters used to conclude substantial equivalence of the design. The modification as described within this submission has been evaluated in terms of both safety and effectiveness. It has been determined that this modification has no impact on the safety and effectiveness of the device.

Summary of Design Control Activities

The risk assessment process used to assess the modifications was a risk analysis, preformed in accordance with ISO 14971. The risk analysis consists of assessing the qualitative and quantitative characteristics of the REMstar SE, identification of

© 2013 Koninklijke Philips Electronics N.V. All Rights Reserved
Questions? Contact FDA/CDRH/OCE/DID at CDRH-FOISTATUS@fda.hhs.gov or call 301-796-8118.

Records processed under FOIA Request #2015-1305; Released by CDRH on 05-11-2016.

possible credible hazards and an estimation of the risks for each hazard in the absence of countermeasures, determination of acceptability of risk, and risk reduction.

Based on the scope of the modifications, the risks identified for the predicate REMstar SE (K122769) remain applicable to the modified REMstar SE submitted under this premarket notification. For the modification being made, the identifications of risks associated with the modification have been presented within the Device Modifications section. These risks are being presented in a format previously requested by the FDA.

To further assure that the modifications have no impact on safety and effectiveness, design verification tests were performed to address the modification. The Design Verification Testing for Modification section provides a summary of the features evaluated, the acceptance criteria, the test, inspection or verification method and a Pass/Fail determination. A Declaration of Conformity with Design Controls is provided in Tab 4.

510(k) Summary

A 510(k) summary of safety & effectiveness is included in Tab 5.

Truthful & Accuracy Certification

A Premarket Notification Truthful & Accurate Statement is provided in Tab 6.

© 2013 Koninklijke Philips Electronics N.V. All Rights Reserved
Questions? Contact FDA/CDRH/OCE/DID at CDRH-FOISTATUS@fda.hhs.gov or call 301-796-8118.

Records processed under FOIA Request #2015-1305; Released by CDRH on 05-11-2016.

Device Comparison

The following table is provided as a comparison between the predicate REMstar SE (K122769) and the modified REMstar SE submitted under this premarket notification. All device features and functionality identified below are unchanged.

Table 1 Predicate Device Comparison

	REMstar SE K122769	Modified REMstar SE
Intended Use	For treatment of Obstructive Sleep Apnea (OSA)	Unchanged from predicate
Intended Environment of Use	Home & Hospital/Institutional Environment	Unchanged from predicate
Patient Population	Spontaneously breathing patients (> 30 kg)	Unchanged from predicate
Product Code	BZD	Unchanged from predicate
Physical Characteristics		
Design	Microprocessor controlled motor blower design	Unchanged from predicate
Manufacturing Process	Assembly & Packaging	Unchanged from predicate
Energy Delivered	Continuous Positive Airway Pressure (CPAP)	Unchanged from predicate
Materials (Enclosure)	Flame Retardant	Unchanged from predicate
Anatomical Sites	Nasal and Full Face Masks	Unchanged from predicate
Energy Source	External Switching Power Supply AC Power (Input): 100 – 240 VAC DC Power (Output): 12 VDC	Unchanged from predicate
Performance Characteristics		
Modes of Operation	CPAP	Unchanged from predicate
Pressure Regulation Method	Motor Speed	Unchanged from predicate
CPAP Pressure	4 to 20 cm H_2O	Unchanged from predicate
Pressure Stability	± 1.0 cm H_2O	Unchanged from predicate
Pressure Setting Adjustment Increments	0.5 cm H_2O	Unchanged from predicate
Fine Pressure Adjustment	± 1.9 cm H_2O	Unchanged from predicate
Fine Pressure Adjustment Increments	0.1 cm H_2O	Unchanged from predicate
Altitude Compensation Method	Manual (Pressure offset controlled by user accessible setting)	Unchanged from predicate
Altitude Compensation Settings	3 settings: • Low (< 2500 feet) • Medium (2500 – 5000 feet) High (5001 – 7500 feet)	Unchanged from predicate
Comfort Type(s)	• None • Ramp • Flex • Tubing Resistance Compensation • Humidification	Unchanged from predicate
Flex Level Control	Flex level control is a user settable parameter. When enabled, 3 settings are available [1, 2, and 3]	Unchanged from predicate
Flex Range	4 to 20 cm H_2O	Unchanged from predicate
Flow Detection	Flow estimation based on motor work load	Unchanged from predicate
Ramp	None or Linear	Unchanged from predicate

© 2013 Koninklijke Philips Electronics N.V. All Rights Reserved
Questions? Contact FDA/CDRH/OCE/DID at CDRH-FOISTATUS@fda.hhs.gov or call 301-796-8118.

Records processed under FOIA Request #2015-1305; Released by CDRH on 05-11-2016.

	REMstar SE K122769	Modified REMstar SE
Tubing Resistance Compensation	4 to 20 cm H_2O	Unchanged from predicate
Tubing Resistance Level Control	• Tubing Resistance Level Control is a user settable parameter • Tubing Resistance Level Control has two settings (15 or 22)	Unchanged from predicate
Data Storage	• Internal NVRAM • Removable Secure Digital (SD) Card	Unchanged from predicate
System Alerts		
System Error Alerts	• System Error	Unchanged from predicate
Features		
Humidification	Device supports the use of passive (pass-over) and heated humidifiers	Unchanged from predicate
Humidification Interface	The base unit and humidifier are connected through a hardwire connection. All control circuitry necessary for the operation of the humidifier is located in the base unit. The base unit controls operation of the humidifier heater plate by controlling the supplied power. The temperature of the heater plate is measured by a thermistor inside the heater plate assembly and is passed back to the base unit. Only Respironics proprietary heated humidifiers can use this communications interface.	Unchanged from predicate
Humidification Setting Controls	Setting controls reside on the base unit; accessible through display and user keys	Unchanged from predicate
Humidification Status Indicators	Visual indicators reside on the base unit and humidifier. • Humidifier on status indicated by humidifier icon shown on base unit display • Humidifier setting viewable through menu setting	Unchanged from predicate
Humidifier Water Chamber	(b)(4) chamber with (b)(4) heated plate. Seats into the humidifier base plate using a spring loaded chamber seat.	Unchanged from predicate
Humidifier Chamber Volume	325 ml	Unchanged from predicate
Connectivity Slot (Communications Connector)	Devices includes a connectivity slot for the connection of accessories for remote data access / serial communication	Unchanged from predicate
Remote Data Access	• Removable Secure Digital (SD) Card • Serial Communications (via Link Module or Modems)	Unchanged from predicate
User Interface		
CPAP	Two separate user interfaces. One for the patient and one for the professional: • icon based Backlit display • 6 icon based user control keys (Pressure Start/Stop/Select, Humidifier, Ramp, FLEX, and two Navigation Keys)	Unchanged from predicate
Humidification	Humidifier controls are incorporated into the base unit controls .The base unit controls include the status indicator of the humidifier as well as the settings	Unchanged from predicate
Pressure	Digital readout on display	Unchanged from predicate

© 2013 Koninklijke Philips Electronics N.V. All Rights Reserved
Questions? Contact FDA/CDRH/OCE/DID at CDRH-FOISTATUS@fda.hhs.gov or call 301-796-8118.

Records processed under FOIA Request #2015-1305; Released by CDRH on 05-11-2016.

	REMstar SE K122769	Modified REMstar SE
Device Accessories		
Patient Tubing	• 15 mm diameter tubing (22 mm interface) • 22 mm diameter tubing (22 mm interface) • 15 mm diameter heated tubing (22 mm interface)	Unchanged from predicate
Modems	• Attaches to the connectivity slot in the rear of the device • Provides data communications access for data management software	Unchanged from predicate
Oxygen Safety Valve	An optional oxygen safety valve is used when using oxygen with the device	Unchanged from predicate
Data Management Software	Allows a HomeCare Provider or Physician to view device compliance data	Unchanged from predicate
Clinical Remote Software	Allows remote control of the device (through connectivity slot interface)	Unchanged from predicate
Safety Classification		
Degree of protection against electric shock	II	Unchanged from predicate
Degree of protection	Type BF	Unchanged from predicate
Modes of Operation	Continuous	Unchanged from predicate

© 2013 Koninklijke Philips Electronics N.V. All Rights Reserved
Questions? Contact FDA/CDRH/OCE/DID at CDRH-FOISTATUS@fda.hhs.gov or call 301-796-8118.

Records processed under FOIA Request #2015-1305; Released by CDRH on 05-11-2016.

Device Modification

Modification 1: Modification to device enclosure materials

Overview of Modification

The purpose of this modification is to change the appearance of the REMstar SE through colorants changes to two existing base materials used in the predicate REMstar SE (K122769). This appearance change is being made solely to further distinguish the REMstar SE from the aesthetics of past designs. The REMstar SE is comprised of both the Base Unit and an optional Heated Humidifier which both include components affected by this modification. It should be noted that not all components changed in support of this modification are located in the gas pathway (air flow path) of the device. The gas pathway components affected by these colorant changes are identified in Table 2 below.

All remaining gas pathway materials used in the modified REMstar SE (which includes both the Base Unit and Heated Humidifier) are identical to the gas pathway materials of the predicate REMstar SE as it was approved in K122769 in formulation, processing, and sterilization, and no other chemicals have been added (e.g., plasticizers, fillers, color additives, cleaning agents, mold release agents, etc.).

Table 2 Gas Pathway Components Affected By Colorant Changes

	Component	Does component come into contact with heated and humidified air? See Note 1	Predicate Material	New Material
Base Unit	Right Side Panel	No; Component is located before the introduction of heat/humidification	(b)(4) [redacted]	
	Bottom Enclosure	No; Component is located before the introduction of heat/humidification		
Heated Humidifier	Dry box top	No; Component is located before the introduction of heat/humidification		
	Dry box bottom	No; Component is located before the introduction of heat/humidification		
	Water Tank Top	Yes		
	Water Tank Bottom	Yes		

(b)(4) [redacted]

© 2013 Koninklijke Philips Electronics N.V. All Rights Reserved
Questions? Contact FDA/CDRH/OCE/DID at CDRH-FOISTATUS@fda.hhs.gov or call 301-796-8118.

Records processed under FOIA Request #2015-1305; Released by CDRH on 05-11-2016.

The following images have been provided to show the location of the gas pathway components affected by the colorant changes identified in Table 2.

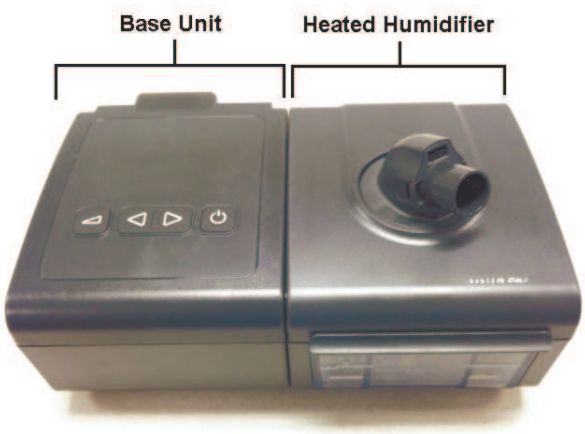

Figure 1 REMstar SE Base Unit connected to Heated Humidifier (Water Tank Installed)

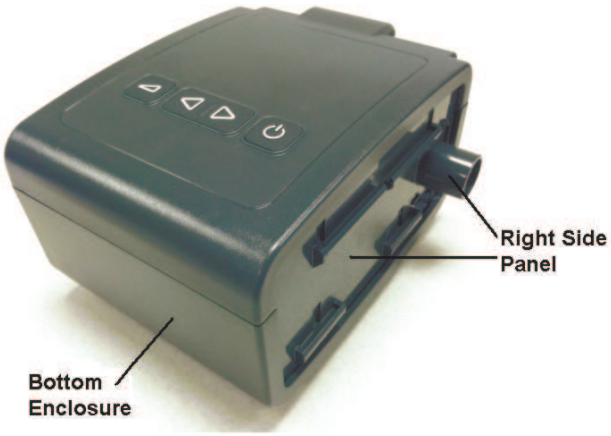

Figure 2 REMstar SE Base Unit

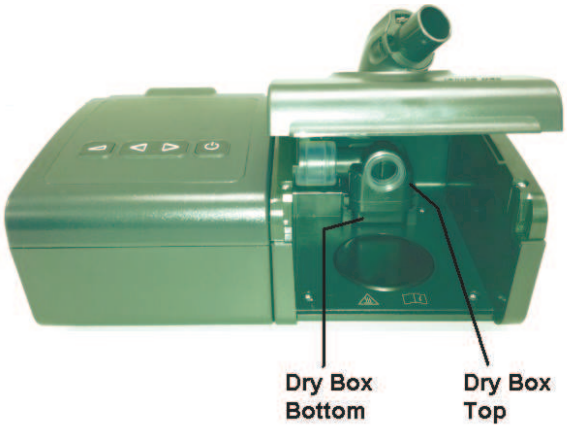

Figure 3 REMstar SE Base Unit Connected to Heated Humidifier (Water Tank Removed)

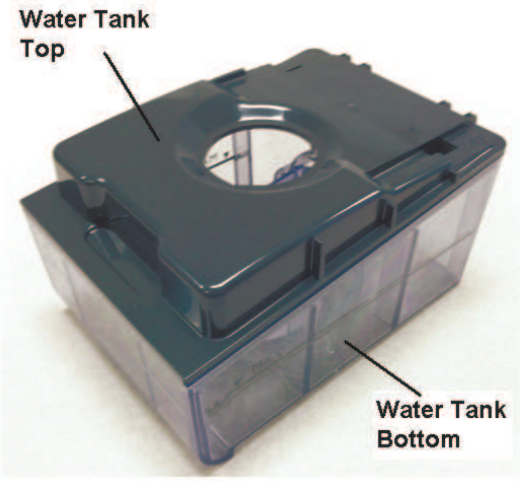

Figure 4 REMstar SE Water Tank

© 2013 Koninklijke Philips Electronics N.V. All Rights Reserved
Questions? Contact FDA/CDRH/OCE/DID at CDRH-FOISTATUS@fda.hhs.gov or call 301-796-8118.

Records processed under FOIA Request #2015-1305; Released by CDRH on 05-11-2016.

Risk Assessment of Modification

No new risks were identified as a result of this modification. However, existing risks which are potentially impacted by this modification are described in the table below.

Table 3 Risk Evaluation

Device Modification	Risk	Mitigation Activity	Verification Procedure and Acceptance Criteria	Results of Verification
Introduction of new material in gas pathway: (b)(4) [redacted]	Upper respiratory irritation (Acute or chronic illness or disability due to response to toxic matter delivered to the patient)	Biocompatibility Assessment completed in accordance with ISO 10993-1 • Cytotoxicity • Irritation • Sensitization • Exhaustive extraction (Completed to determine what extractables from the gas pathway materials exposed to humidification, if any, are deposited into the water and characterization of any detected materials in accordance with ISO 10993-18.) See Note 1	Refer to Table 4, Table 5, Table 6 and Table 7 under the Verification Test Summary for Modification section below for information related to the verification procedure and acceptance criteria.	Pass. All acceptance criteria were met.
Introduction of new material in gas pathway: (b)(4) [redacted]	Upper respiratory irritation (Acute or chronic illness or disability due to response to toxic matter delivered to the patient)	Biocompatibility Assessment completed in accordance with ISO 10993-1 • Cytotoxicity • Irritation • Sensitization • Exhaustive extraction (Completed to determine what extractables from the gas pathway materials exposed to humidification, if any, are deposited into the water and characterization of any detected materials in accordance with ISO 10993-18.) See Note 1	Refer to Table 4, Table 5, Table 6 and Table 7 under the Verification Test Summary for Modification section below for information related to the verification procedure and acceptance criteria.	Pass. All acceptance criteria were met.

© 2013 Koninklijke Philips Electronics N.V. All Rights Reserved
Questions? Contact FDA/CDRH/OCE/DID at CDRH-FOISTATUS@fda.hhs.gov or call 301-796-8118.

Records processed under FOIA Request #2015-1305; Released by CDRH on 05-11-2016.

Device Modification	Risk	Mitigation Activity	Verification Procedure and Acceptance Criteria	Results of Verification
Change in humidifier water tank materials intended to withstand Hospital and Institution Disinfection process	Infection or Upper respiratory irritation (unable to effectively disinfect water tank)	Efficacy testing for the following disinfection methods (defined in System One Heated Humidifier Manual – Tab 1): • Thermal Disinfection: Immersion in a (tap) water bath at 75°C ± 2°C for 30 minutes • Control III • Cidex	Refer to Table 8 under the Verification Test Summary for Modification section below for information related to the verification procedure and acceptance criteria.	Pass. All acceptance criteria were met.
	Loss of Humidification (Failure of water tank due to inability to withstand multiple disinfection cycles; CPAP therapy still available from base unit)	Performance testing following 60 cycles of each of the following disinfection methods(defined in System One Heated Humidifier Manual – Tab 1): • Thermal Disinfection: Immersion in a (tap) water bath at 75°C ± 2°C for 30 minutes • Control III • Cidex	Refer to Table 9 under the Verification Test Summary for Modification section below for information related to the verification procedure and acceptance criteria.	Pass. All acceptance criteria were met.
Change in enclosure materials intended to withstand general cleaning process	There are no risks associated with general cleaning of enclosure Note: General cleaning process is not used as a control mitigation for any risk	Device is inspected after being subjected to multiple cycles of the following general cleaning methods (defined in REMstar SE Provider Manual – Tab 1): • Mild Detergent • 70% Alcohol • DisCide Towelettes • 10% Bleach Solution • Water* *Water is not defined as general cleaning method in labeling however it is included in testing due to it being a likely misuse case	Refer to Table 10 under the Verification Test Summary for Modification section below for information related to the verification procedure and acceptance criteria.	Pass. All acceptance criteria were met.

(b)(4)

[redacted]

© 2013 Koninklijke Philips Electronics N.V. All Rights Reserved
Questions? Contact FDA/CDRH/OCE/DID at CDRH-FOISTATUS@fda.hhs.gov or call 301-796-8118.

Records processed under FOIA Request #2015-1305; Released by CDRH on 05-11-2016.

Verification Test Summary for Modification

To demonstrate safety and effectiveness of the REMstar SE, testing, inspections and reviews were performed in accordance with the processes described in the "Summary of Design Control Activities" section. The following sections provide a summary of the activities of the modification presented in this Special 510(k). The following information is provided:

- Features(s) of the modification being evaluated. This includes design aspects of the modification as it relates to system safety, performance, or functionality.
- Acceptance criteria for the modification as it is integrated in REMstar SE
- Test, Inspection, or Verification method used to verify that modification does not degrade the safety, performance, or functionality of the REMstar SE
- Pass/Fail information

© 2013 Koninklijke Philips Electronics N.V. All Rights Reserved
Questions? Contact FDA/CDRH/OCE/DID at CDRH-FOISTATUS@fda.hhs.gov or call 301-796-8118.

Records processed under FOIA Request #2015-1305; Released by CDRH on 05-11-2016.

Modification 1: Modification to device enclosure materials

Table 4 Biocompatibility (Cytotoxicity)

Features Evaluated:	Biocompatibility – Cytotoxicity (b)(4) [redacted] (b)(4) [redacted] colorant were tested independently in accordance with the established protocol. Each study was conducted in compliance with U.S. Food and Drug Administration regulations set forth in 21 CFR, Part 58.
Acceptance Criteria:	• A decrease in number of living cells results in a decrease in the metabolic activity in the sample. This decrease directly correlates to the amount of blue-violet formazan formed, as monitored by the absorbance (=OD) at 570 nm. The reduction of viability of the cells exposed to the test article extract compared to the blank (cells exposed to the extraction medium) will be calculated using the following equation: $$\text{Viability \%} = 100 * OD_{570e} / OD_{570b}$$ Where: OD_{570e} is the mean value of the measured optical density of the cells exposed to the extract of the test article; OD_{570b} is the mean value of the measured optical density of the blanks (cells exposed to extraction medium = untreated). The lower the Viability % value, the higher the cytotoxicity potential of the test article is. If viability is reduced to < 70% of the blank, the test article will be considered to have a cytotoxic potential. • When additional dilutions are tested, the 50% extract of the test sample should have at least the same or higher viability than the 100% extract; otherwise the test should be repeated • The study and its design will employ methodology to minimize uncertainty of measured and control of bias for data collection and analysis

© 2013 Koninklijke Philips Electronics N.V. All Rights Reserved
Questions? Contact FDA/CDRH/OCE/DID at CDRH-FOISTATUS@fda.hhs.gov or call 301-796-8118.

Records processed under FOIA Request #2015-1305; Released by CDRH on 05-11-2016.

Test, Inspection or Verification Method:	Experimental Design and Dosage 1. Preparation of Test and Control Articles: 1.1. The test article (2 g) was combined with 10 mL of vehicle at a ratio of 0.2 g per 1.0 mL. The test article was extracted in complete MEM supplemented with 10% fetal bovine serum at 37 ± 1 °C for 24 ± 2 hours. 1.2. Extracts prepared with complete MEM were tested at 100% (neat) concentration. 1.3. The positive control article (Natural Rubber) and negative control (Negative Control Plastic) were extracted at a ratio of 3 cm^2 per 1 mL in complete MEM supplemented with 10% fetal bovine serum at 37 ± 1 °C for 24 ± 2 hours. 1.4. A medium (untreated) control was also prepared. The medium control was the extraction vehicle without the test material that was subjected to the extraction conditions and test procedures. 2. Pre-Dose Procedure 2.1. Cell Culture Preparation: Cell cultures were removed from culture flasks by enzymatic digestion (trypsin/EDTA) and the cell suspension was centrifuged. The cells were then re-suspended in culture medium and seeded at 10^4 cells per well in 100 µL of complete MEM in a 96–well plate. The cultures were incubated for 24 ± 2 hours (5 ± 1 % carbon dioxide; CO_2, 37 ± 1 C, > 90% humidity) so that cells formed a half-confluent monolayer. 2.2. At the complete of the extraction period, the test article appeared unchanged by the extraction procedure. The extract was clear and free of particulates and did not change color which indicates an absence of a pH shift. The extracts were filter sterilized by passage through a 0.2 µm pore filter to prevent interference from potential microbial contamination from the test article, prior to being applied to the cell monolayer. 3. Dose Administration: 3.1. A volume of 100 µL of the test article or control article extracts or the extraction medium control (untreated) was used to replace the maintenance medium of the cell culture. The test article extract was tested at neat (100%), 1:2 (50%), 1:4 (25%), and 1:8 (12.5%) concentrations. The control article extracts were tested at neat concentrations. All extracts were tested in 6 replicates with the exception of the untreated control that was dosed in 12 replicates. 3.2. All cultures were incubated for 48 ± 2 hours, at 37 ± 1 °C, in a humidified atmosphere containing 5 ± 1% CO_2. 4. Post-Dose Procedure: After examination of the plates, the culture medium was carefully removed from the plates. Fifty microliters (50 µL) of the MTT solution (1 mg/mL in complete MEM without Phenol Red) was then added to each test well, and the plates were further incubated for 2 ± 0.2 hours in an incubator at 30 ± 1 °C. The MTT solution was then decanted and the 100 µL of isopropanol was added to each well to dissolve the formazan. The optical density (OD) of each well was then measured at 570 nm.
Pass/Fail:	Pass. Based on the criteria of the established protocol the test articles for both the (b)(4) [redacted] (b)(4) [redacted] colorant are not considered to have cytotoxic potential.

© 2013 Koninklijke Philips Electronics N.V. All Rights Reserved
Questions? Contact FDA/CDRH/OCE/DID at CDRH-FOISTATUS@fda.hhs.gov or call 301-796-8118.

Records processed under FOIA Request #2015-1305; Released by CDRH on 05-11-2016.

Table 5 Biocompatibility (Irritation)

Features Evaluated:	Biocompatibility – Irritation (b)(4) [redacted] (b)(4) [redacted] were tested independently in accordance with the established protocol. Each study was conducted in compliance with U.S. Food and Drug Administration regulations set forth in 21 CFR, Part 58.
Acceptance Criteria:	• Evaluation of Animal Data: After the 72 ± 2 hour grading, all erythema grades plus edema grades 24 ± 2, 48 ± 2, and 72 ± 2 hours are totaled separately for each test article and vehicle control for each individual animal. To calculate the score of a test article or vehicle control on each individual animal, each of the totals are divided by 15 (3 scoring time points x 5 test or vehicle control injection sidtes). To determine the overall mean score for each test article and each corresponding vehicle control, the scores are added for the three animals and divided by three. The final test article score can be obtained by subtracting the score of the vehicle control from the test article score. The requirements of the test are met if the difference between the test article mean score and the vehicle control mean score is 1.0 or less. If at any observation period the average reaction to the test article is questionably greater than the average reaction to the vehicle control, the test is repeated using six additional rabbits. • The study and its design employ methodology to minimize uncertainty of measurement and control of bias for data collection and analysis
Test, Inspection or Verification Method:	Experimental Design and Dosage: 1. Preparation of Test and Control Articles: 1.1. The test article (4 g) was combined with 20 mL of vehicle at a ratio of 0.2 g per 1.0 mL. The test article was separately extracted in NaCl and CSO at 70 ± 2 °C for 24 ± 2 hours. Following extraction, each bottle containing test or control article was cooled to room temperature. 1.2. Properly prepared test articles were placed in separate extraction bottles and to each bottle the appropriate medium was added. The extraction medium completely covered the test article. 1.3. Each extracting medium (control article) was prepared for parallel treatments and comparisons. Each control article was prepared in the same manner as the test article. 1.4. The test article appeared unchanged by the extraction procedure. It was not degraded of deformed. The extract was clear and free from particulates. Each extract was agitated vigorously prior to administration. All other test article preparation was as specified by the Sponsor. 2. Pre-Dose Procedure: 2.1. Pre-Treatment Screening Procedure Animals selected for the study were examined to ensure that their skin was free from irritation, trauma, and disease. 2.2. Each animal was weighed and clipped free of fur on the dorsal side prior to injection. 3. Dose Administration: 3.1. A volume of 0.2 mL per site of one extract was injected intracutaneously at one side of each of three rabbits, five sites for the test article extract and five posterior sites for the control. 3.2. Similarly, at the other side of each rabbit, the other extract was injected.

© 2013 Koninklijke Philips Electronics N.V. All Rights Reserved
Questions? Contact FDA/CDRH/OCE/DID at CDRH-FOISTATUS@fda.hhs.gov or call 301-796-8118.

Records processed under FOIA Request #2015-1305; Released by CDRH on 05-11-2016.

	3.3. The maximum injections per rabbit were limited to 2 test articles and 2 corresponding control articles. 4. Post-Dose Procedure: 4.1. The injection sites on each animal were observed for signs of erythema and edema immediately following injection and at 24 ± 2 hours, 48 ± 2 hours, and 72 ± 2 hours after injection of the test article. Observations were scored according to the Classification System for Scoring Skin Reactions. 4.2. Observations conducted also included all clinical and toxicologic signs. 4.3. At the end of the observation period, the animals were weighed. 4.4. At the end of the study, the animals were returned to the general colony.
Pass/Fail:	Pass. For both materials, the test article sites did not show a significantly greater biological reaction than the sites injected with the control article. Based on the criteria of the established protocol, the test articles for both the (b)(4) [redacted] (b)(4) [redacted] meet the acceptance requirements.

© 2013 Koninklijke Philips Electronics N.V. All Rights Reserved
Questions? Contact FDA/CDRH/OCE/DID at CDRH-FOISTATUS@fda.hhs.gov or call 301-796-8118.

Records processed under FOIA Request #2015-1305; Released by CDRH on 05-11-2016.

Table 6 Biocompatibility (Sensitization)

<table>
<tr><td>Features Evaluated:</td><td>Biocompatibility – Sensitization

(b)(4) [redacted]
(b)(4) [redacted] were tested independently in accordance with the established protocol. Each study was conducted in compliance with U.S. Food and Drug Administration regulations set forth in 21 CFR, Part 58.</td></tr>
<tr><td>Acceptance Criteria:</td><td>

Using the Scoring System of Kligman, the allergenic potential of a est article is classified as follows:

<table>
<tr><th colspan="2">Magnusson and Kligman Scale</th></tr>
<tr><th>Reaction</th><th>Grading Scale</th></tr>
<tr><td>No Visible Change</td><td>0</td></tr>
<tr><td>Discrete or Patch Erythema</td><td>1*</td></tr>
<tr><td>Moderate and Confluent Erythema</td><td>2*</td></tr>
<tr><td>Intense Erythema and Swelling</td><td>3*</td></tr>
</table>
*Denotes a positive response.
<table>
<tr><th colspan="3">Sensitization Classification</th></tr>
<tr><th>Sensitization Rate (%)</th><th>Grade</th><th>Class</th></tr>
<tr><td>0 – 8</td><td>I</td><td>Weak</td></tr>
<tr><td>9 – 28</td><td>II</td><td>Mild</td></tr>
<tr><td>29 – 64</td><td>III</td><td>Moderate</td></tr>
<tr><td>65 – 80</td><td>IV</td><td>Strong</td></tr>
<tr><td>81 – 100</td><td>V</td><td>Extreme</td></tr>
</table>
The test results are interpreted based upon the percentage sensitization observed.

A sensitizer is a test article in which a positive response is observed in at least 8% of the test animals.
The study and its design employ methodology to minimize uncertainty of measurement and control of bias for data collection and analysis.

</td></tr>
<tr><td>Test, Inspection or Verification Method:</td><td>Experimental Design and Dosage
1. Preparation of Test and Control Articles:
1.1. The test article (4 g) was combined with 20 mL of vehicle at a ratio of 0.2 g per 1.0 mL. The test article was separately extracted in NaCl and CSO at 70 ± 2 °C for 24 ± 2 hours.
1.2. Properly prepared test articles were placed in separate extraction bottles and to each bottle the appropriate medium was added. The extraction medium completely covered the test article.
1.3. Each extracting medium (control article) was prepared for parallel treatments and comparisons. Each control article was preared in the same manner as the test article.
1.4. The positive control, DNCB, was dissolved in 95% EtOH to a final concentration of 0.1%.
1.5. The test article appeared unchanged by the extraction procedure. It was not degraded or deformed. The extract was clear and free from particulates and the Tropical phase CSO extract appeared to be slightly more viscous after extraction. Each extract was</td></tr>
</table>

© 2013 Koninklijke Philips Electronics N.V. All Rights Reserved
Questions? Contact FDA/CDRH/OCE/DID at CDRH-FOISTATUS@fda.hhs.gov or call 301-796-8118.

Records processed under FOIA Request #2015-1305; Released by CDRH on 05-11-2016.

agitated vigorously prior to administration. All other test article preparation was as specified by the Sponsor.

2. Pre-Dose Procedure
The test animals were weighed and the application sites were prepared by clipping the skin of the test site free of hair. On Day 0 and Day 7, an approximately 5 x 7 cm area over the shoulder region was prepared. On Day 23, an approximately 3 x 3 cm area of the flank was prepared.

3. Dose Administration:
   - 3.1. Distribution of Animals:
     - (1) Experimental (10 animals per extract)
     - (2) Negative Controls (5 animals per extract)
     - (3) Positive Controls (5 animals per study)
   - 3.2. Primary Irritation Phase:
     As the test article was extracted, a Primary Irritation Phase was not performed. The extracts were used at 100% concentration.
   - 3.3. Induction/Intradermal Application (Day 0):
     Three pairs of intradermal injections were made so that on each side of the midline there was one row of three injections each. Injections 1 and 2 were given in close proximity to each other cranially. Injection 3 was located caudally. The injection sites (6) were just within the boundaries of the 2 x 4 cm patch, which were applied one week following the injections. The dosing solutions were as follows:
     - 3.3.1. Experimental Group:
       - (1) 0.1 mL FCA 1:1 with vehicle
       - (2) 0.1 mL test article
       - (3) 0.1 mL test article 1:1 with FCA
     - 3.3.2. Negative Control Group
       - (1) 0.1 mL FCA 1:1 vehicle
       - (2) 0.1 mL vehicle alone
       - (3) 0.1 mL vehicle 1:1 with FCA
     - 3.3.3. Positive Control Group
       - (1) 0.1 mL FCA 1:1 NaCl
       - (2) 0.1 mL 0.1% DNCB in 95% EtOH
       - (3) 0.1 mL 0.1% DNCB in 95% EtOH 1:1 with FCA
     - 3.3.4. The extracts were used neat when preparing the dosing solutions/dilutions for injection.
   - 3.4. Topical Application:
     - 3.4.1. On Day 6, animals that showed no signs of irritation or corrosion after the induction application were pretreated with 10% sodium dodecyl sulfate in petrolatum 24 hours before the topical induction application. If irritation or corrosion was present, no pretreatment occurred.
     - 3.4.2. Experimental Group (Day 7):
       The test article extract was spread over a 2 x 4 cm piece of filter paper to saturation. The patch was secured with an occlusive wrapping, which was wound around the torso of the animal. The dressing was left in place for 48 hours.
     - 3.4.3. Negative Control Group (Day 7):
       The animals were exposed to the vehicle without the test article using the same procured as utilized in the experimental group.
     - 3.4.4. Positive Control Group (Day 7):
       The animals were exposed to 0.1% DNCB solution in 95%

© 2013 Koninklijke Philips Electronics N.V. All Rights Reserved
Questions? Contact FDA/CDRH/OCE/DID at CDRH-FOISTATUS@fda.hhs.gov or call 301-796-8118.

Records processed under FOIA Request #2015-1305; Released by CDRH on 05-11-2016.

	EtOH in the same manner as the experimental group. 3.4.5. The extract was used neat when preparing the dosing solutions/dilutions. 3.5. Challenge application (Day 23): Pieces of the extract saturated filter paper, measuring 2 x 2 cm, were secured to the previously unexposed area of the animal for 24 hours with the same type of occlusive bandage used for the topical induction. 3.5.1. For the negative control animals, the patch was saturated with the vehicles without the test article. 3.5.2. For the positive control animals, the patch was saturated with 0.1% DNCB in 95% EtOH. 3.5.3. The extracts were used neat when preparing the dosing solutions/dilutions. 4. Post Dose Procedures: 4.1. Skin Readings (Day 25, 26, and 27): Immediately after removing the patches, the challenge sites were cleaned and shaved, and readings were taken at 24, 48, and 72 hours after the challenge exposure period. For evaluation of skins reactions a four-point scale was used, as described in Magnusson and Kligman Scale table. Any animal showing a skin reaction, at 24, 48, or 72 hours, of 1 or greater in accordance with the table, was considered positive. 4.2. Daily observations were made for clinical signs. 4.3. Animals were weighed at the end of the observation period and sacrificed by carbon dioxide inhalation.
Pass/Fail:	Pass. The (b)(4) [redacted] (b)(4) [redacted] elicited no reaction at the challenge (0% sensitization), following an induction phase. Therefore, as defined by the scoring system of Kligman, these are Grade I reactions and the test articles are classified as having weak allergenic potential. Based on the criteria of the protocol, a Grade I sensitization rate is not considered significant and the test article meets the acceptance requirements.

© 2013 Koninklijke Philips Electronics N.V. All Rights Reserved
Questions? Contact FDA/CDRH/OCE/DID at CDRH-FOISTATUS@fda.hhs.gov or call 301-796-8118.

Records processed under FOIA Request #2015-1305; Released by CDRH on 05-11-2016.

Table 7 Exhaustive Extraction and Material Characterization

Features Evaluated:	Extractables - Exhaustive Extraction and Material Characterization The exhaustive extraction, along with the associated analysis, was completed independently for both (b)(4) [redacted] (b)(4) [redacted] Each activity was completed in accordance with the protocol identified below and the analysis of the extractables was completed in accordance with ISO 10993-18. The following suite of tests where involved with this activity: • **Exhaustive Extraction** The purpose of this study was to determine the point at which the test article is exhaustively extracted. This test does not identify extractables from the test article. • **Determination of Extractable Species From a Test Article by Infrared Spectroscopy** The purpose of this study was to prepare an infrared spectrum of a material for the purpose of identifying the material or examining it for impurities. • **Determination Extractable Elements By Inductively Coupled Plasma Mass Spectroscopy** The purpose of this study was to analyze an extract for trace elements using Inductively Coupled Plasma Mass Spectroscopy (ICP-MS). • **Determination of Extractable Semi-Volatile Organic Compounds by Gas Chromatography/Mass Spectrometry (GC/MS)** The purpose of this study was to screen an extract for extractable semi-volatile organic compounds by Gas Chromatography/Mass Spectrometry (GC/MS) • **Ultra Performance Liquid Chromatography/Mass Spectroscopy Non-volatile Screen (UPLC-MS)** The purpose of this study was to screen a test extract for extractables using Ultra Performance Liquid Chromatography/Mass Spectrometry (UPLC/MS).
Acceptance Criteria:	• **Exhaustive Extraction –** establishment of exhaustive extraction completion point to be used as an input to the studies listed below • **Determination of Extractable Species From a Test Article by Infrared Spectroscopy –** No major bands of interest detected • **Determination Extractable Elements By Inductively Coupled Plasma Mass Spectroscopy –** No biologically significant concentrations of trace elements detected • **Determination of Extractable Semi-Volatile Organic Compounds by Gas Chromatography/Mass Spectrometry (GC/MS) –** No semi-volatile compounds greater than the quantitation limit detected.

© 2013 Koninklijke Philips Electronics N.V. All Rights Reserved
Questions? Contact FDA/CDRH/OCE/DID at CDRH-FOISTATUS@fda.hhs.gov or call 301-796-8118.

Records processed under FOIA Request #2015-1305; Released by CDRH on 05-11-2016.

	• **Ultra Performance Liquid Chromatography/Mass Spectroscopy Non-volatile Screen (UPLC-MS) –** No biologically significant concentrations of non-volatile compounds (Tinuvin P, Butylated Hydroxytoluene (BHT) and Irganox 1010) detected.
Test, Inspection or Verification Method:	**Exhaustive Extraction** Extraction Procedure A 5.0 gram portion of the test article was refluxed for one hour in 25 mL of purified water. The control was prepared and extracted in the same manner. After extraction, the extract was allowed to cool to room temperature. The solvent was quantitatively transferred to a tared crucible, evaporated to dryness, and weighed. The difference between the weight obtained from the test article extract and the control extract was calculated. The same portion of the test article was extracted one additional time using the same volume of solvent. Non-Volatile Residue (NVR) was determined for each of the additional test and control extracts. The last extraction was verification that the test article was exhaustively extracted. Analytical Sample Preparation A 5.0 gram portion of the test article was refluxed for one hour in 25 mL of purified water. A single extraction was performed since the residue obtained from the second NVR was not significant due to the accuracy of the test. Once extracted, the extract was decanted and stored in a low temperature incubator until analytical analyses were performed. **Determination of Extractable Species From Test Articles by Infrared Spectroscopy** A 5.0 gram portion of the test article was refluxed for one hour in 25 mL of purified water. The method of this extraction was completed following the procedure defined within **Exhaustive Extraction** study identified above. An approximate 1-2 mL portion of the purified water test extract was transferred to a clean vial and placed in a 105 °C drying oven to evaporate the extracting solvent. A small amount of chloroform was added to the vial to dissolve the residue. The resulting solution was placed on a clean potassium bromide crystal and the chloroform was allowed to evaporate. The residue was analyzed by transmission infrared spectroscopy using the instrument conditions listed below. Instrument: Fourier Transform Infrared Spectrophotometer Wavenumber Range – Collected: 4400 cm^{-1} – 350 cm^{-1} Scan Number: 8 Resolution: 4 cm^{-1} **Determination Extractable Elements By Inductively Coupled Plasma Mass Spectroscopy** A 3.0 gram portion of the test article was extracted in boiling water

© 2013 Koninklijke Philips Electronics N.V. All Rights Reserved
Questions? Contact FDA/CDRH/OCE/DID at CDRH-FOISTATUS@fda.hhs.gov or call 301-796-8118.

Records processed under FOIA Request #2015-1305; Released by CDRH on 05-11-2016.

for one hour in 15 mL of purified water. The control was prepared and extracted in the same manner.

Condition of Test Article Extract: clear and colorless

A 11 mL portion of the purified water test extract was placed in a clean sample tube and 310 µL of Ultra High Purity HNO_3 (69%) was added. A 15 mL portion of the control extract was placed in a clean sample tube and 435 µL of Ultra High Purity HNO_3 (69%) was added. The resulting solutions were analyzed for elements by ICP-MS.

Determination of Extractable Semi-Volatile Organic Compounds by Gas Chromatography/Mass Spectrometry (GC/MS)

A 5.0 gram portion of the test article was refluxed for one hour in 25 mL of purified water. The method of this extraction was completed following the procedure defined within **Exhaustive Extraction** study identified above. A 2.0 mL portion of the purified water test extract and its associated control extract were each solvent exchanged with 2.0 mL of dichloromethane. The resulting solutions were analyzed by GC/MS for semi-volatiles using the following instrument conditions.

Instrument: Shimadzu QP 2012 GC/MS

GC Method			
Column	(5%-phenyl)-methylpolysiloxane 30 m x 0.25 mm i.d., 0.25 µm d_f		
Carrier Gas	Helium	Injection Temperature	250.0 °C
Column Flow	1.2 mL/min	Injection Mode	Splitless
Injection Volume	1 µL	Interface Temperature	300.0 °C
Oven Temperature Program			
Rate (°C/min)	Temperature (°C)	Hold Time (min)	
-	40.0	4.00	
10.0	280.0	4.00	
Post Run Oven Program			
	310.0	10.00	
MS Method			
Ion Source Temperature	230 °C		
Ionization Mode	Electron Ionization		
Spectral Range	45 – 550 amu		
Detector Type	Quadrupole		

Standards of phenanthrene at concentrations of 1.0, 25, and 50 µg/mL were prepared and injected in triplicate. A linear regression was performed using the resulting responses of phenanthrene at these concentrations. Compounds present in the extracts were tentatively identified using a combination of items, which may have included, but was not limited to, comparison of retention time, comparison or mass spectra, structural elucidation using the resulting mass spectra, library search results, and the GC/MS software.

© 2013 Koninklijke Philips Electronics N.V. All Rights Reserved
Questions? Contact FDA/CDRH/OCE/DID at CDRH-FOISTATUS@fda.hhs.gov or call 301-796-8118.

Records processed under FOIA Request #2015-1305; Released by CDRH on 05-11-2016.

Ultra Performance Liquid Chromatography/Mass Spectroscopy Non-volatile Screen (UPLC-MS)

A 5.0 gram portion of the test article was refluxed for one hour in 25 mL of purified water. The method of this extraction was completed following the procedure defined within **Exhaustive Extraction** study identified above.

Stock solutions of Tinuvin P, BHT and Irganox 1010 were prepared in isopropyl alcohol and diluted to result in final concentrations of 0.10, 1.0 and 10 µg/mL. These standard solutions were analyzed and the resulting chromatograms and spectra evaluated for system suitability criteria prior to examining the test extract results.

The purified water test extract was analyzed for the presence of Tinuvin P, BHT, Irganox 1010 and other non-volatile compounds. If present, an attempt was made to identify compounds present in the test extracts through a combination of items which may include, but was not limited to, comparison of retention time, comparison of UV spectra, structural elucidation using the mass spectra, and the LC-MS software. A partial identification of the compounds was made if the identity of the compound could not be determined.

The following UPLC-MS instrumental conditions were used for the analysis:

Instrument	Waters Xevo G2 QTof with ACQUITY UPLC	
Column	ACQUITY UPLC BEH C_8 1.7 µm, 50 mm x 2.1 mm	
Flow Rate	0.3 mL/minute	
Injection Volume	5 µL	
Column temperature	35 °C	
Eluent A	Ultra Pure Water	
Eluent B	Acetonitrile, LC-MS Grade	
***Gradient:**		
Time	Eluent A (%)	Eluent B (%)
0.00	95	5
10.00	2	98
16.00	2	98
UV Detector		
PDA Spectral Range	190 - 400 nm	
Mass Spectrometer		
Ionization	Electrospray Ionization, negative mode	
Analyzer	Quadrupole – Time of Flight	
Spectral Range	50 – 1500 amu	

*A post-run was used to re-equilibrate the column between injections.

Pass/Fail:

Pass. All acceptance criteria were successfully met.

- **Determination of Extractable Species From a Test Article by Infrared Spectroscopy –** There were no major bands of interest detected in the test article residue.
- **Determination Extractable Elements By Inductively Coupled Plasma Mass Spectroscopy –** No biologically significant

© 2013 Koninklijke Philips Electronics N.V. All Rights Reserved
Questions? Contact FDA/CDRH/OCE/DID at CDRH-FOISTATUS@fda.hhs.gov or call 301-796-8118.

Records processed under FOIA Request #2015-1305; Released by CDRH on 05-11-2016.

	concentrations of trace elements detected • **Determination of Extractable Semi-Volatile Organic Compounds by Gas Chromatography/Mass Spectrometry (GC/MS) –** There were no semi-volatile compounds greater than the quantitation limit of 1.0 µg/mL for the purified water test and control extracts. • **Ultra Performance Liquid Chromatography/Mass Spectroscopy Non-volatile Screen (UPLC-MS) –** The purified water test extract contained < 0.10 µg/mL (< 0.50 µg/g) of Tinuvin P, Butylated Hydroxytoluene (BHT) and Irganox 1010.

© 2013 Koninklijke Philips Electronics N.V. All Rights Reserved
Questions? Contact FDA/CDRH/OCE/DID at CDRH-FOISTATUS@fda.hhs.gov or call 301-796-8118.

Records processed under FOIA Request #2015-1305; Released by CDRH on 05-11-2016.

Table 8 Disinfection (Water Tank) - Efficacy

Features Evaluated:	Disinfection (Water Tank) - Efficacy
Acceptance Criteria:	Test articles must demonstrate a minimum of 6 log reduction to be judged as clean and the design favorable to the disinfection method after being inoculated with at least 10^7 CFU of the challenge organism. The log reduction is calculated as follows: Log reduction = (Log_{10} CFU Recovered from the Positive Control device) – (Log10 CFU Recovered from a challenged and disinfected device)
Test, Inspection or Verification Method:	A water tank is inoculated with challenge organism and then put through one of the disinfection methods specified in product labeling. Following completion of disinfection method, the water tank is analyzed to determine amount of challenge organism remaining. The log reduction is then calculated and compared to the acceptance criteria. Process is then repeated for each disinfection method.
Pass/Fail:	Pass. All acceptance criteria were successfully met.

Table 9 Disinfection (Water Tank) - Performance

Features Evaluated:	Disinfection (Water Tank) - Performance
Acceptance Criteria:	Following 60 cycles of disinfection (using each disinfection method), the water tank cannot: • Allow more than 2.25 LPM of air leak • Allow any water to leak following 8 hours of operation.
Test, Inspection or Verification Method:	Water tank is subjected to 60 cycles of a disinfection method specified in product labeling. The water tank is visually inspected and then subjected to both an air leak test and water leak test. Process is then repeated for each disinfection method.
Pass/Fail:	Pass. All acceptance criteria were successfully met.

Table 10 General Cleaning (Device Enclosure)

Features Evaluated:	General Cleaning (Device Enclosure)
Acceptance Criteria:	Verification through inspection that the quality and integrity of the device has not been compromised by the enclosure cleaning. Examples of characteristics that are reviewed following each cycle include signs of visible damage, illegible labels, and peeling labels.
Test, Inspection or Verification Method:	Device is subjected to multiple cycles of each general cleaning method and inspected for signs of visible damage, illegible labels and peeling labels.
Pass/Fail:	Pass. All acceptance criteria were successfully met.

© 2013 Koninklijke Philips Electronics N.V. All Rights Reserved
Questions? Contact FDA/CDRH/OCE/DID at CDRH-FOISTATUS@fda.hhs.gov or call 301-796-8118.

Records processed under FOIA Request #2015-1305; Released by CDRH on 05-11-2016.

Table 11 Air Quality Evaluation

Features Evaluated:	Air Quality Evaluation
Acceptance Criteria:	The REMstar SE must be designed to meet established breathing air guidelines associated with the output of volatile organic compounds (VOCs), carbon dioxide and carbon monoxide. • **Requirement:** Carbon Monoxide measurements shall be below 9 ppm **Source:** National Ambient Air Quality Standard • **Requirement:** Carbon Dioxide measurement shall be below 1,000 ppm **Source:** Occupational Safety and Health Administration (OSHA 20 CFR 1910.124) • **Requirement:** Ozone measurement shall be below 0.09 ppm **Source:** National Ambient Air Quality Standard • **Requirement:** Particulate Matter (< 2.5 µm) shall be below 15 $\mu g/m^3$ **Source:** National Ambient Air Quality Standard • **Requirement:** Particulate matter (< 10 µm) shall be below 150 $\mu g/m^3$ **Source:** National Ambient Air Quality Standard • **Requirement:** Individual VOCs shall be below 1/10 Threshold Limit Value (ACGIH TLVs 2010)* **Source:** Occupational Safety and Health Administration (OSHA 20 CFR 1910.124) and Canadian Standards Association (CSA 2180) *Due to the large list of compounds that are tested for, the acceptable 1/10 TLV values were not presented for each volatile organic compound. This level of detail is available if necessary.
Test, Inspection or Verification Method:	• The packaged device is visually inspected and the stored in a controlled environment immediately upon receipt by the testing facility. • Background air samples are collected from the 5.96 m^3 environmental chamber prior to testing of the device to assure that the device was supplied with clean, uncontaminated air. • The device is setup according to operating instructions • The device is loaded into the environmental chamber and allowed to equilibrate. • The device is then operated and the output is evaluated for VOCs, aldehydes, CO_2, CO, ozone and particles.
Pass/Fail:	Pass. All acceptance criteria were successfully met.

© 2013 Koninklijke Philips Electronics N.V. All Rights Reserved
Questions? Contact FDA/CDRH/OCE/DID at CDRH-FOISTATUS@fda.hhs.gov or call 301-796-8118.

Records processed under FOIA Request #2015-1305; Released by CDRH on 05-11-2016.

Tab 1

Labeling

Product labeling for the modified REMstar SE is included in this section. This labeling is unchanged from the labeling of the predicate REMstar SE (K122769).

Note: No highlights will be found in the product labeling since no modifications were made.

Product labeling is comprised of the following:

- REMstar SE User Manual
- REMstar SE Provider Manual
- REMstar SE Device Warning Label
- System One Heated Humidifier Manual
- System One Heated Humidifier Warning Label

(Please turn the page)

© 2013 Koninklijke Philips Electronics N.V. All Rights Reserved
Questions? Contact FDA/CDRH/OCE/DID at CDRH-FOISTATUS@fda.hhs.gov or call 301-796-8118.

Records processed under FOIA Request #2015-1305; Released by CDRH on 05-11-2016.

REMstar SE User Manual

(Please turn the page)

© 2013 Koninklijke Philips Electronics N.V. All Rights Reserved
Questions? Contact FDA/CDRH/OCE/DID at CDRH-FOISTATUS@fda.hhs.gov or call 301-796-8118.

Records processed under FOIA Request #2015-1305; Released by CDRH on 05-11-2016.

PHILIPS
RESPIRONICS

REMstar SE | USER MANUAL

Questions? Contact FDA/CDRH/OCE/DID at CDRH-FOISTATUS@fda.hhs.gov or call 301-796-8118.

Records processed under FOIA Request #2015-1305; Released by CDRH on 05-11-2016.

© 2012 Koninklijke Philips Electronics N.V. All rights reserved.
Questions? Contact FDA/CDRH/OCE/DID at CDRH-FOISTATUS@fda.hhs.gov or call 301-796-8118.

Records processed under FOIA Request #2015-1305; Released by CDRH on 05-11-2016.

Table of Contents

Questions? Contact FDA/CDRH/OCE/DID at CDRH-FOISTATUS@fda.hhs.gov or call 301-796-8118.

Records processed under FOIA Request #2015-1305; Released by CDRH on 05-11-2016.

CAUTION: U. S. federal law restricts this device to sale by or on the order of a physician.

Intended Use

The REMstar SE delivers positive airway pressure therapy for the treatment of Obstructive Sleep Apnea in spontaneously breathing patients weighing over 30kg (66 lbs). It is for use in the home or hospital/institutional environment.

Important

The device is to be used only on the instruction of a licensed physician. Your home care provider will make the correct pressure settings according to your health care professional's prescription.

Several accessories are available to make your OSA treatment with the REMstar SE system as convenient and comfortable as possible. To ensure that you receive the safe, effective therapy prescribed for you, use only Philips Respironics accessories.

Warnings

A warning indicates the possibility of injury to the user or the operator.

- This manual serves as a reference. The instructions in this manual are not intended to supersede the health care professional's instructions regarding the use of the device.
- The operator should read and understand this entire manual before using the device.
- This device is not intended for life support.
- The device should be used only with masks and connectors recommended by Philips Respironics or with those recommended by the health care professional or respiratory therapist. A mask should not be used unless the device is turned on and operating properly. The exhalation port(s) associated with the mask should never be blocked. **Explanation of the Warning:** The device is intended to be used with special masks or connectors that have exhalation ports to allow continuous flow of air out of the mask. When the device is turned on and functioning properly, new air from the device flushes the exhaled air out through the mask exhalation port. However, when the device is not operating, enough fresh air will not be provided through the mask, and exhaled air may be rebreathed. Rebreathing of exhaled air for longer than several minutes can in some circumstances lead to suffocation.
- If you are using a full face mask (a mask covering both your mouth and your nose), the mask must be equipped with a safety (entrainment) valve.
- When using oxygen with this system, the oxygen supply must comply with local regulations for medical oxygen.
- Oxygen supports combustion. Oxygen should not be used while smoking or in the presence of an open flame.
- When using oxygen with this system, turn the device on before turning on the oxygen. Turn the oxygen off before turning the device off. This will prevent oxygen accumulation in the device. **Explanation of the Warning:** When the device is not in operation and the oxygen flow is left on, oxygen delivered into the tubing may accumulate within the device's enclosure. Oxygen accumulated in the device enclosure will create a risk of fire.
- When using oxygen with this system, a Philips Respironics Pressure Valve must be placed in-line with the patient circuit between the device and the oxygen source. The pressure valve helps prevent the backflow of oxygen from the patient circuit into the device when the unit is off. Failure to use the pressure valve could result in a fire hazard.
- Do not connect the device to an unregulated or high pressure oxygen source.
- Do not use the device in the presence of a flammable anaesthetic mixture in combination with oxygen or air, or in the presence of nitrous oxide.
- Do not use the device near a source of toxic or harmful vapors.
- Do not use this device if the room temperature is warmer than 35° C (95° F). If the device is used at room temperatures warmer than 35° C (95° F), the temperature of the airflow may exceed 43° C (109° F). This could cause irritation or injury to your airway.
- Do not operate the device in direct sunlight or near a heating appliance because these conditions can increase the temperature of the air coming out of the device.
- Contact your health care professional if symptoms of sleep apnea recur.
- If you notice any unexplained changes in the performance of this device, if it is making unusual or harsh sounds, if it has been dropped or mishandled, if water is spilled into the enclosure, or if the enclosure is broken, disconnect the power cord and discontinue use. Contact your home care provider.
- Repairs and adjustments must be performed by Philips Respironics-authorized service personnel only. Unauthorized service could cause injury, invalidate the warranty, or result in costly damage.
- Periodically inspect electrical cords and cables for damage or signs of wear. Discontinue use and replace if damaged.
- To avoid electrical shock, always unplug the power cord from the wall outlet before cleaning the device. DO NOT immerse the device in any fluids.
- If the device is used by multiple persons (such as rental devices), a low-resistance, main flow bacteria filter should be installed in-line between the device and the circuit tubing to prevent contamination.

Questions? Contact FDA/CDRH/OCE/DID at CDRH-FOISTATUS@fda.hhs.gov or call 301-796-8118.

Records processed under FOIA Request #2015-1305; Released by CDRH on 05-11-2016.

- Be sure to route the power cord to the outlet in a way that will prevent the cord from being tripped over or interfered with by chairs or other furniture.
- Using this device at an incorrect altitude setting could result in airflow pressures higher or lower than the prescribed setting. Always verify the altitude setting when travelling or relocating, and adjust the system accordingly.
- This device is activated when the power cord is connected.
- For safe operation when using a humidifier, the humidifier must always be positioned below the breathing circuit connection at the mask and the air outlet on the device. The humidifier must be level for proper operation.

Note: Please see the "Limited Warranty" section of this manual for information on warranty coverage.

Cautions

A Caution indicates the possibility of damage to the device.

- Medical electrical equipment needs special precautions regarding EMC and needs to be installed according to EMC information. Contact your home care provider regarding EMC installation information.
- Mobile RF communications equipment can affect medical electrical equipment.
- Pins of connectors marked with the ESD warning symbol shall not be touched and connections shall not be made without special precautions. Precautionary procedures include methods to prevent build-up of electrostatic charge (e.g., air conditioning, humidification, conductive floor coverings, non-synthetic clothing), discharging one's body to the frame of the equipment or system or to earth. It is recommended that all individuals that will handle this device understand these precautionary procedures at a minimum as part of their training.
- Before operating the device, ensure that the SD card cover is replaced whenever any of the accessories such as the Link Module or Modem are not installed. Refer to the instructions that came with your accessory.
- Condensation may damage the device. If this device has been exposed to either very hot or very cold temperatures, allow it to adjust to room temperature (operating temperature) before starting therapy. Do not operate the device outside of the operating temperature range shown in the Specifications.
- Do not use extension cords with this device.
- Do not place the device directly onto carpet, fabric, or other flammable materials.
- Do not place the device in or on any container that can collect or hold water.
- A properly installed, undamaged reusable foam inlet filter is required for proper operation.
- Tobacco smoke may cause tar build-up within the device, which may result in the device malfunctioning.
- Dirty inlet filters may cause high operating temperatures that may affect device performance. Regularly examine the inlet filters as needed for integrity and cleanliness.
- Never install a wet filter into the device. You must ensure sufficient drying time for the cleaned filter.
- Always ensure that the DC power cord securely fits into your therapy device prior to use. Contact your home care provider or Philips Respironics to determine if you have the appropriate DC cord for your specific therapy device.
- When DC power is obtained from a vehicle battery, the device should not be used while the vehicle's engine is running. Damage to the device may occur.
- Only use a Philips Respironics DC Power Cord and Battery Adapter Cable. Use of any other system may cause damage to the device.

Contraindications

When assessing the relative risks and benefits of using this equipment, the clinician should understand that this device can deliver pressures up to 20 cm H_2O. In the event of certain fault conditions, a maximum pressure of 30 cm H_2O is possible. Studies have shown that the following pre-existing conditions may contraindicate the use of CPAP therapy for some patients:

- Bullous Lung Disease
- Pathologically Low Blood Pressure
- Bypassed Upper Airway
- Pneumothorax
- Pneumocephalus has been reported in a patient using nasal Continuous Positive Airway Pressure. Caution should be used when prescribing CPAP for susceptible patients such as those with: cerebral spinal fluid (CSF) leaks, abnormalities of the cribriform plate, prior history of head trauma, and/or pneumocephalus. (Chest 1989; 96:1425-1426)

The use of positive airway pressure therapy may be temporarily contraindicated if you exhibit signs of a sinus or middle ear infection. Not for use with patients whose upper airways are bypassed. Contact your health care professional if you have any questions concerning your therapy.

Questions? Contact FDA/CDRH/OCE/DID at CDRH-FOISTATUS@fda.hhs.gov or call 301-796-8118.

Records processed under FOIA Request #2015-1305; Released by CDRH on 05-11-2016.

Symbol Key

The following symbols may appear on the device and power supply:

Symbol	Definition
	Consult accompanying instructions for use.
~	AC Power
⎓	DC Power
IP22	Drip Proof Equipment
	Caution, consult accompanying documents.
	ESD Warning symbol
	Class II (Double Insulated)
	Type BF Applied Part
	For Indoor Use Only.
	Do not disassemble.
	For Airline Use. Complies with RTCA/DO-160F section 21, category M.
	Separate collection for electrical and electronic equipment per EC Directive 2002/96/EC.

Questions? Contact FDA/CDRH/OCE/DID at CDRH-FOISTATUS@fda.hhs.gov or call 301-796-8118.

Records processed under FOIA Request #2015-1305; Released by CDRH on 05-11-2016.

System Contents

Your REMstar SE system may include the following items:

- Device
- User manual
- Carrying case
- Flexible tubing
- Power cord
- Power supply
- Side cover panel
- SD card
- Reusable gray foam filter
- Disposable ultra-fine filter (optional)
- Humidifier (optional)

Note: If any of these items are missing, contact your home care provider.

System Overview

The REMstar SE is a CPAP (Continuous Positive Airway Pressure) device designed for the treatment of Obstructive Sleep Apnea (OSA). CPAP maintains a constant level of pressure throughout the breathing cycle.

When prescribed for you, the device provides several special features to help make your therapy more comfortable. The ramp function allows you to lower the pressure when you are trying to fall asleep. The air pressure will gradually increase until your prescription pressure is reached. You also have the option of not using the ramp feature at all.

Additionally, the Flex comfort feature provides you with pressure relief when you exhale during therapy.

Several accessories are also available for use with your device. Contact your home care provider to purchase any accessories not included with your system.

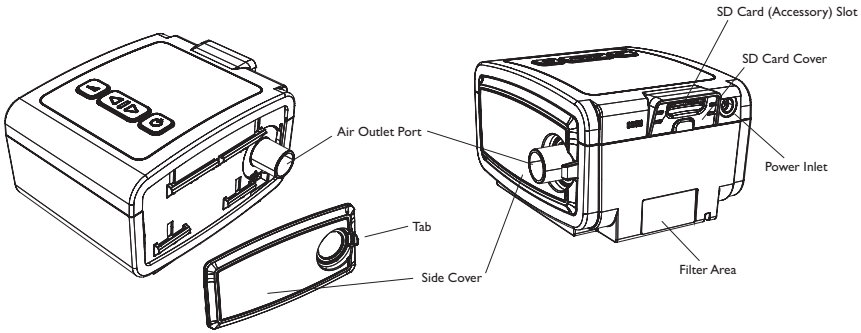

This figure illustrates some of the device features, described in the following table.

Device Feature	Description
Air Outlet Port (conical, 22 mm)	Connect the 15 or 22 mm Philips Respironics flexible tubing here. **Note:** Heated Tubing should only be connected to the Air Outlet Port of the compatible System One Heated Humidifier and not to the Air Outlet Port of the therapy device.
SD Card (Accessory) Slot	If applicable, insert the optional accessory SD card here.
SD Card Cover	If applicable, the optional accessories such as a Link Module or Modem can be installed here. Refer to the instructions supplied with the accessory. When not using an accessory, this cover must be in place on the device.
Power Inlet	Connect the power cord here.
Filter Area	A reusable, gray foam filter must be placed in the filter area to screen out normal household dust and pollens. A white ultra-fine filter can also be used for more complete filtration of very fine particles.
Side Cover	If using a humidifier with the device, this side cover can be easily removed with the release tab before attaching the humidifier. Refer to the humidifier manual. When not using a humidifier, this cover must be in place on the device.

Questions? Contact FDA/CDRH/OCE/DID at CDRH-FOISTATUS@fda.hhs.gov or call 301-796-8118.

Records processed under FOIA Request #2015-1305; Released by CDRH on 05-11-2016.

Control Buttons

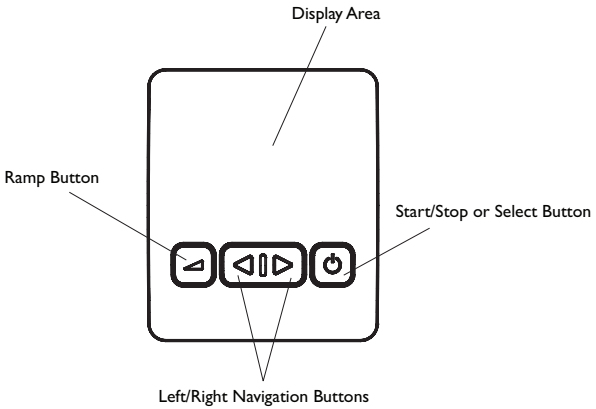

These features are described below.

Feature	Description
Display Area	This area shows the therapy settings and patient data, and other messages.
Ramp Button	When the airflow is on, this button allows you to activate or restart the ramp function. Ramp lowers the airflow pressure and then gradually increases it, allowing you to fall asleep more easily.
Start/Stop or Select Button	Starts the airflow and places the device into Active state, or stops the airflow, and places the device into Standby state. Also, when navigating the patient screens, press this button to select the menu options.
Left/Right Navigation Button	Performs display navigation or setting adjustments.

Note: The control buttons are backlit and will be on when the device is plugged into a power outlet.

Available Therapies

The REMstar SE device delivers the following therapies:

- **CPAP** – Delivers Continuous Positive Airway Pressure; CPAP maintains a constant level of pressure throughout the breathing cycle.
- **CPAP with Flex** – Delivers CPAP therapy with pressure relief upon exhalation to improve patient comfort based on patient needs.

Installing the Air Filters

CAUTION: A properly installed, undamaged reusable gray foam filter is required for proper operation.

The device uses a gray foam filter that is washable and reusable, and an optional white ultra-fine filter that is disposable. The reusable filter screens out normal household dust and pollens, while the optional ultra-fine filter provides more complete filtration of very fine particles. The gray reusable filter must be in place at all times when the device is operating. The ultra-fine filter is recommended for people who are sensitive to tobacco smoke or other small particles.

A reusable gray foam filter and a disposable ultra-fine filter are supplied with the device. If your filters are not already installed when you receive your device, you must at least install the reusable gray foam filter before using the device.

To install the filter(s):

1. If you are using the white disposable ultra-fine filter, insert it into the filter area first, mesh-side facing in, towards the device.
2. Insert the gray foam filter into the filter area after the ultra-fine filter.

Note: If you are not using the white disposable filter, simply insert the gray foam filter into the filter area.

Questions? Contact FDA/CDRH/OCE/DID at CDRH-FOISTATUS@fda.hhs.gov or call 301-796-8118.

Records processed under FOIA Request #2015-1305; Released by CDRH on 05-11-2016.

Connecting the Breathing Circuit

To use the system, you will need the following accessories in order to assemble the recommended circuit:

- Philips Respironics interface (nasal mask or full face mask) with integrated exhalation port, or Philips Respironics interface with a separate exhalation device (such as the Whisper Swivel II)
  WARNING: If you are using a full face mask (a mask covering both your mouth and your nose), the mask must be equipped with a safety (entrainment) valve.
- Philips Respironics 22 mm (or 15 mm) flexible tubing, 1.83 m (6 ft.)
- Philips Respironics headgear (for the mask)
  WARNING: If the device is used by multiple persons (such as rental devices), a low-resistance, main flow bacteria filter should be installed in-line between the device and the circuit tubing to prevent contamination.

To connect your breathing circuit to the device, complete the following steps:

1. Connect the flexible tubing to the air outlet on the side of the device.
   Note: Make sure the Tubing type setting (15 or 22) matches the tubing you are using (Philips Respironics 15 or 22 mm tubing).
   Note: Heated Tubing should only be connected to the Air Outlet Port of the compatible System One Heated Humidifier and not to the Air Outlet Port of the therapy device.
   Note: If required, connect a bacteria filter to the device air outlet, and then connect the flexible tubing to the outlet of the bacteria filter.
   Note: When using the bacteria filter, the device performance may be affected. However, the device will remain functional and deliver therapy.
2. Connect the tubing to the mask. Refer to the instructions that came with your mask.
3. Attach the headgear to the mask if necessary. Refer to the instructions that came with your headgear.

Where to Place the Device

Place the device on a firm, flat surface somewhere within easy reach of where you will use it at a level lower than your sleeping position. Make sure the filter area on the back of the device is not blocked by bedding, curtains, or other items. Air must flow freely around the device for the system to work properly. Make sure the device is away from any heating or cooling equipment (forced air vents, radiators, air conditioners).

CAUTION: Do not place the device directly onto carpet, fabric, or other flammable materials.

CAUTION: Do not place the device in or on any container that can collect or hold water.

Supplying AC Power to the Device

CAUTION: Condensation may damage the device. If this device has been exposed to either very hot or very cold temperatures, allow it to adjust to room temperature (operating temperature) before starting therapy. Do not operate the device outside of the operating temperature range shown in the Specifications.

WARNING: Be sure to route the power cord to the outlet in a way that will prevent the cord from being tripped over or interfered with by chairs or other furniture.

WARNING: This device is activated when the power cord is connected.

IMPORTANT: If you are using your device with a humidifier, refer to the instructions included with your humidifier for details on how to power the device and humidifier.

Complete the following steps to operate the device using AC power:

1. Plug the socket end of the AC power cord (included) into the power supply (also included).
   IMPORTANT: When you are using Heated Tubing with the compatible System One Heated Humidifier, you must use the 80W power supply.
2. Plug the pronged end of the AC power cord into an electrical outlet that is not controlled by a wall switch.
3. Plug the power supply cord's connector into the power inlet on the back of the device.
4. Ensure that all connections are secure.
   IMPORTANT: To remove AC power, disconnect the power supply cord from the electrical outlet.
   WARNING: Periodically inspect electrical cords and cables for damage or signs of wear. Discontinue use and replace if damaged.
   CAUTION: Do not use extension cords with this device.

Questions? Contact FDA/CDRH/OCE/DID at CDRH-FOISTATUS@fda.hhs.gov or call 301-796-8118.

Records processed under FOIA Request #2015-1305; Released by CDRH on 05-11-2016.

Display

The display screen is shown here.

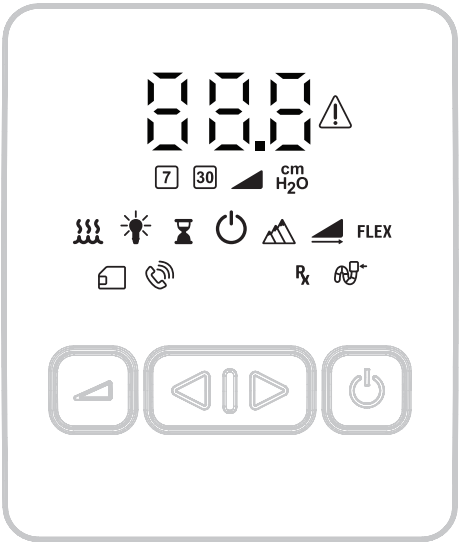

The information shown on the display is defined as follows:

Icon	Description	Icon	Description
	Device requires user attention		Therapy ON/OFF icon
7	Seven day average		Altitude setting
30	Thirty day average		Ramp duration setting
	Ramp starting pressure setting	FLEX	Flex setting
cm H_2O	Pressure setting		SD card data activity
	Heated humidifier		Modem operation
	Backlight	Rx	Prescription setting
	Therapy Hours Time Meter		Tubing type setting

Questions? Contact FDA/CDRH/OCE/DID at CDRH-FOISTATUS@fda.hhs.gov or call 301-796-8118.

Records processed under FOIA Request #2015-1305; Released by CDRH on 05-11-2016.

Starting the Device

Note: The numbers shown in the screens throughout this manual are examples only. Actual numbers will vary.

1. Plug the device into an AC power source. The complete display screen will light up briefly followed by the Software Version screen for a few seconds.
2. The control buttons will then light up which indicates that the device in now in the standby state.
3. Press the START/STOP button to turn on the airflow. Put on your mask assembly when the air starts to flow.

   Note: There will be a short pause after pressing the START/STOP button until the air starts to flow.
4. The Monitor Pressure screen will then appear, example shown here.

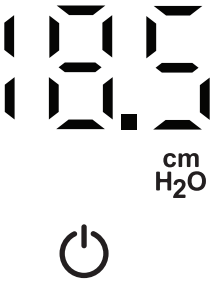

Monitor Pressure Screen

The Monitor Pressure screen shows the current pressure setting in cm H_2O.

5. Make sure that no air is leaking from your mask into your eyes. If it is, adjust the mask and headgear until the air leak stops. See the instructions provided with your mask for more information.

   Note: A small amount of mask leak is normal and acceptable. Correct large mask leaks or eye irritation from an air leak as soon as possible.

   Note: If you are using the device in bed, try placing the tubing from the device over your headboard. This may reduce tension on the mask.

   Note: You must remove the mask and patient circuit before you get out of bed.
6. Press the START/STOP button again to turn off therapy.

Ramp Feature

You can press the RAMP button during therapy to activate the Ramp feature. This feature reduces the air pressure when you are trying to fall asleep and then gradually increases (ramps) the pressure until your prescription setting is reached, allowing you to fall asleep more comfortably. You can use the RAMP button as often as you wish during the night.

Note: If the Ramp feature is on, the Ramp icon ( ) will display below the current pressure setting.

Questions? Contact FDA/CDRH/OCE/DID at CDRH-FOISTATUS@fda.hhs.gov or call 301-796-8118.

Records processed under FOIA Request #2015-1305; Released by CDRH on 05-11-2016.

Navigating the Patient Settings

When the device is in the standby state, press and hold either the LEFT or RIGHT button for at least 2 seconds to enter the patient settings. You can then use the LEFT/RIGHT button (◁ ▯ ▷) to navigate the patient settings, shown here.

Note: You can only enter these settings when the device is in standby state.

Once you highlight the setting that you want to change, press the SELECT button (⏻). You can then use the LEFT/RIGHT button (◁ ▯ ▷) to adjust that setting. Press the SELECT button again to save the new setting.

These settings are described here:

Icon	Name	Description
	Heated Humidifier setting	If using a humidifier on your device, this setting allows you to choose the humidifier mode and the desired humidity setting. Once you press the SELECT button to choose this setting, the letter will blink. Use the LEFT/RIGHT button to scroll between the available humidifier modes: c, o, or h. The humidifier has 3 different modes: Classic (c), System One (o), and Heated Tube (h). The Heated Tube (h) option will only display if you are using the heated tubing with the humidifier and the 80W power supply. The humidifier icon will change color to indicate which mode is being used. White is Classic (c), Blue is System One (o), and Orange is Heated Tube (h). This icon will also display this color during therapy when the humidifier is applying heat. Press the SELECT button again and the number will now blink. Use the LEFT/RIGHT button to scroll between the available humidity settings: 0 (off), 1, 2, 3, 4 or 5. Press the SELECT button again to choose the setting. You can also access only the humidity setting screen during therapy. Simply press the LEFT/RIGHT button during therapy and the humidity setting will display. Use the LEFT/RIGHT button to choose the new humidity setting. The screen will automatically switch back to the Monitor Pressure screen.
	Backlight setting	This setting allows you to choose the desired backlight setting for the device screen. Once you press the SELECT button to choose this setting, the number will blink. Use the LEFT/RIGHT button to toggle between the available settings: 0 (off), 1, 2, or 3 for variable brightness. Press the SELECT button again to choose the setting.
	Therapy Hours	This setting allows you to view your therapy usage in hours. Once this icon is highlighted, the device will scroll through the 3 available Therapy Hours screens: total accumulated therapy hours, the 7 day therapy average (shown with the 7 icon) and the 30 day average (shown with the 30 icon). **Note:** You can also access the Enhanced Compliance Check from this setting. Refer to the "Enhanced Compliance Check" section of this manual for more information.
	Therapy ON/OFF	When this icon is highlighted, Press the START/STOP button ⏻ to turn the airflow on or off.

Questions? Contact FDA/CDRH/OCE/DID at CDRH-FOISTATUS@fda.hhs.gov or call 301-796-8118.

Records processed under FOIA Request #2015-1305; Released by CDRH on 05-11-2016.

Icon	Name	Description
	Altitude setting	This screen allows you to modify the altitude adjustment setting. Once you press the SELECT button to choose this setting, the number will blink. Use the LEFT/RIGHT button to toggle between the available settings: 1 = less than 762 m (<2500 ft.) 2 = 762 m to 1524 m (2500 to 5000 ft.) 3 = 1525 m to 2286 m (5001 to 7500 ft.) **Note**: Elevations over 2286 m (7500 ft.) may affect the accuracy of the pressure. Press the SELECT button again to save the new setting. **Warning**: Using this device at an incorrect altitude setting could result in airflow pressures higher or lower than the prescribed setting. Always verify the altitude setting when travelling or relocating, and adjust the system accordingly.
	Ramp start pressure setting	This screen allows you to modify the ramp starting pressure. Once you press the SELECT button to choose this setting, the number will blink. Use the LEFT/RIGHT button to increase or decrease the ramp starting pressure from 4.0 cm H_2O to your prescription pressure in 0.5 cm H_2O increments. Press the SELECT button again to save the new setting. **Note**: The Ramp start pressure setting uses the same icon as the Ramp time setting. If "cm H_2O" is highlighted below the number, you are in the Ramp start pressure setting.
	Ramp time setting	This screen allows you to set the ramp time. The device increases the CPAP pressure from the Ramp Starting Pressure (4 cm H_2O) to the CPAP prescription pressure setting over the length of time specified here. Once you press the SELECT button to choose this setting, the number will blink. Use the LEFT/RIGHT button to set the ramp time in 5 minute increments from 0 to 45. Press the SELECT button again to save the new setting. **Note**: If the CPAP pressure is set to 4, or this setting is set to 0, nothing will happen when you press the RAMP button. **Note**: The Ramp time setting uses the same icon as the Ramp start pressure setting. If "cm H_2O" is NOT highlighted below the number, you are in the Ramp time setting.
FLEX	Flex setting	The Flex comfort feature allows you to adjust the level of air pressure relief that you feel when you exhale during therapy. Once you press the SELECT button to choose this setting, the number will blink. Use the LEFT/RIGHT button to toggle between the available settings: 1, 2, or 3. The setting of "1" provides a small amount of pressure relief, with higher numbers providing additional relief. Press the SELECT button again to choose the setting. If your provider has locked this setting you will see an "L" before the number and you will not be able to change it.
	Tubing type setting	This setting allows you to select the correct size diameter tubing that you are using with the device. Once you press the SELECT button to choose this setting, the number will blink. Use the LEFT/RIGHT button to toggle between the available settings: You can choose either (22) for the Philips Respironics 22 mm tubing, or (15) for the Philips Respironics 15 mm tubing. When using Heated Tubing, the device will automatically change this setting to the appropriate tubing type (15h) and you will not be able to change it. **Note:** If the Heated Tubing is removed, the device will default back to the previous tubing type setting.

Questions? Contact FDA/CDRH/OCE/DID at CDRH-FOISTATUS@fda.hhs.gov or call 301-796-8118.

Records processed under FOIA Request #2015-1305; Released by CDRH on 05-11-2016.

Device Messages

The following icons may appear during use of this device. These icons are used to provide information regarding the status of the device and are not associated with any device settings.

Icon	Name	Description
	Alert Icon	When the unit detects a system error, the Alert icon is displayed. When this occurs, the blower is automatically turned off and pushbutton functions are disabled. In order to use the device, the system error needs to be resolved. Refer to the Troubleshooting section for more information.
	SD Card Icon	If an SD card is inserted in the device, the SD Card icon will be displayed while usage information is being recorded to the SD Card. You do not need to take any special action when this icon is displayed.
	Modem Icon	If a modem is attached to the device, the Modem Icon will be displayed while data is being transferred. You do not need to take any special action when this icon is displayed.
Rx	Prescription Icon	If the device has been programmed with a new prescription, the Prescription Icon will be displayed for several seconds. If the Prescription Icon is accompanied with the Alert Icon, this means that there was an error was encountered while programming the new prescription. Refer to the Troubleshooting section for more information.

Enhanced Compliance Check

To view the Enhanced Compliance Check screen, highlight the Therapy Hours icon when the device is in the standby state. Then press and hold both the LEFT navigation button and the SELECT button for 5 seconds. The device will then display the following 5 screens. It will cycle through these screens twice before returning to the standby state.

Display	Description
4XX	Where XX is the 2 digit month for the start date
3XX	Where XX is the 2 digit day for the start date
2XX	Where XX is the 2 digit year for the start date
1XX	Where XX is the number of days that the device was used for longer that 4 hours
0XX	Where XX is the 2 digit check code number used by your home care provider to validate the data

Note: If compliance data is not available for 70% or more of the last 30 days, the device will not display the information stated above. Instead the device will display 3 dashes (- - -).

Note: Your home care provider may periodically ask you for this information.

Questions? Contact FDA/CDRH/OCE/DID at CDRH-FOISTATUS@fda.hhs.gov or call 301-796-8118.

Records processed under FOIA Request #2015-1305; Released by CDRH on 05-11-2016.

Troubleshooting

The table below lists some of the problems you may experience with your device or mask and possible solutions to those problems.

Problem	Why It Happened	What to Do
Nothing happens when you apply power to the device. The backlights on the buttons do not light.	There's no power at the outlet or the device is unplugged.	If you are using AC power, check the outlet and verify that the device is properly plugged in. Make sure there is power available at the outlet. Make sure the AC power cord is connected correctly to the power supply and the power supply cord is securely connected to the device's power inlet. If the problem continues to occur, contact your home care provider. Return both the device and power supply to your provider, so they can determine if the problem is with the device or power supply. If you are using DC power, make sure your DC power cord and battery adaptor cable connections are secure. Check your battery. It may need recharged or replaced. If the problem persists, check the DC cord's fuse following the instructions supplied with your DC cord. The fuse may need to be replaced. If the problem still occurs, contact your home care provider.
The airflow does not turn on.	There may be a problem with the blower.	Make sure the device is powered correctly when pressing the SELECT button ⏻ to start airflow. If the airflow does not turn on, there may be a problem with your device. Contact your home care provider for assistance.
The device's display is erratic.	The device has been dropped or mishandled, or the device is in an area with high Electromagnetic Interference (EMI) emissions.	Unplug the device. Reapply power to the device. If the problem continues, relocate the device to an area with lower EMI emissions (away from electronic equipment such as cellular phones, cordless phones, computers, TVs, electronic games, hair dryers, etc.). If the problem still occurs, contact your home care provider for assistance.
The Ramp feature does not work when you press the Ramp button.	Your CPAP pressure is already set to the minimum setting, Ramp Time setting is set to 0, or your Ramp Starting Pressure is the same as your prescribed pressure.	If your CPAP is already set to the minimum setting (4.0 cm H_2O), then the Ramp feature is not available. This cannot be changed. If your Ramp Time setting is set to zero, increase the time to anywhere between 5 and 45 minutes. Refer to "Navigating the Patient Settings" section of this manual for instructions. If your Ramp Starting Pressure is the same as your prescription pressure, decrease the Ramp Starting Pressure so that it is lower than your prescription pressure. To verify your prescription pressure, start the airflow on your device and note the number on the display. You can then verify and change the Ramp Starting Pressure as described in the "Navigating the Patient Settings" section of this manual.
The airflow is much warmer than usual.	The air filters may be dirty. The device may be operating in direct sunlight or near a heater.	Clean or replace the air filters. The temperature of the air may vary somewhat based on your room temperature. Make sure that the device is properly ventilated. Keep the device away from bedding or curtains that could block the flow of air around the device. Make sure the device is away from direct sunlight and heating equipment. If using the humidifier with the device, check the humidifier settings. Refer to the humidifier instructions to make sure the humidifier is working properly. If the problem continues, contact your home care provider.

Questions? Contact FDA/CDRH/OCE/DID at CDRH-FOISTATUS@fda.hhs.gov or call 301-796-8118.

Records processed under FOIA Request #2015-1305; Released by CDRH on 05-11-2016.

Problem	Why It Happened	What to Do
The airflow pressure feels too high or too low.	The Tubing type setting may be incorrect.	Make sure the Tubing type setting (22 or 15) matches the tubing that you are using (Philips Respironics 22 or 15 mm tubing). If you are using the Heated Tubing, this setting will be 15h and you cannot change it.
The Heated Tubing is being used and is turned on in the Heated Humidifier settings, but the Heated Tubing is not warm.	Incorrect power supply is being used (60W is used instead of 80W). Heated Tubing is attached incorrectly or damaged.	Make sure the 80W power supply is being used. This can be confirmed by looking at the power supply for the 60W or 80W symbols. Inspect Heated Tubing for damage and reconnect. If the problem continues, contact your home care provider.
The Heated Tubing is being used and is turned on in the Heated Humidifier settings, but the Humidifier LED does not stay orange (changes to blue).	Incorrect power supply is being used (60W is used instead of 80W). Heated Tubing is attached incorrectly or damaged.	Make sure the 80W power supply is being used. This can be confirmed by looking at the power supply for the 60W or 80W symbols. Inspect Heated Tubing for damage and reconnect. If the problem continues, contact your home care provider.

Questions? Contact FDA/CDRH/OCE/DID at CDRH-FOISTATUS@fda.hhs.gov or call 301-796-8118.

Records processed under FOIA Request #2015-1305; Released by CDRH on 05-11-2016.

Accessories

There are several accessories available for your REMstar SE system such as a humidifier or a modem. Contact your home care provider for additional information on the available accessories. When using optional accessories, always follow the instructions enclosed with the accessories.

CAUTION: Pins of connectors marked with the ESD warning symbol shall not be touched and connections shall not be made without special precautions. Precautionary procedures include methods to prevent build-up of electrostatic charge (e.g., air conditioning, humidification, conductive floor coverings, non-synthetic clothing), discharging one's body to the frame of the equipment or system or to earth. It is recommended that all individuals that will handle this device understand these precautionary procedures at a minimum as part of their training.

Adding a Humidifier with or without Heated Tubing

You can use the heated humidifier and the heated tube with your device. They are available from your home care provider. A humidifier and heated tube may reduce nasal dryness and irritation by adding moisture to the airflow.

WARNING: For safe operation, the humidifier must always be positioned below the breathing circuit connection at the mask and the air outlet on the device. The humidifier must be level for proper operation.

Note: Refer to the humidifier's instructions for complete setup information.

Using the SD Card

The REMstar SE system comes with an SD card inserted in the SD card slot on the back of the device to record information for the home care provider. Your home care provider may ask you to periodically remove the SD card and send it to them for evaluation. The SD card does not need to be installed for the device to work properly. Contact your provider if you have any questions about the SD card.

Adding Supplemental Oxygen

Oxygen may be added at the mask connection. Please note the warnings listed below when using oxygen with the device.

WARNINGS:

- When using oxygen with this system, the oxygen supply must comply with local regulations for medical oxygen.
- Oxygen supports combustion. Oxygen should not be used while smoking or in the presence of an open flame.
- When using oxygen with this system, a Philips Respironics Pressure Valve must be placed in-line with the patient circuit between the device and the oxygen source. The pressure valve helps prevent the backflow of oxygen from the patient circuit into the device when the unit is off. Failure to use the pressure valve could result in a fire hazard.

  Note: Refer to the pressure valve's instructions for complete setup information.
- When using oxygen with this system, turn the device on before turning on the oxygen. Turn the oxygen off before turning the device off. This will prevent oxygen accumulation in the device.
- Do not connect the device to an unregulated or high pressure oxygen source.

Supplying DC Power to the Device

The Philips Respironics DC Power Cord can be used to operate this device in a stationary recreational vehicle, boat, or motor home. The Philips Respironics DC Battery Adapter Cable, when used with the DC Power Cord, enables the device to be operated from a 12 VDC free-standing battery.

CAUTION: Always ensure that the DC power cord securely fits into your therapy device prior to use. Contact your home care provider or Philips Respironics to determine if you have the appropriate DC cord for your specific therapy device.

CAUTION: When DC power is obtained from a vehicle battery, the device should not be used while the vehicle's engine is running. Damage to the device may occur.

CAUTION: Only use a Philips Respironics DC Power Cord and Battery Adapter Cable. Use of any other system may cause damage to the device.

Refer to the instructions supplied with the DC Power Cord and adapter cable for information on how to operate the device using DC power.

Questions? Contact FDA/CDRH/OCE/DID at CDRH-FOISTATUS@fda.hhs.gov or call 301-796-8118.

Records processed under FOIA Request #2015-1305; Released by CDRH on 05-11-2016.

Traveling with the System

When traveling, the carrying case is for carry-on luggage only. The carrying case will not protect the system if it is put through checked baggage.

For your convenience at security stations, there is a note on the bottom of the device stating that it is medical equipment and is suitable for airline use. It may be helpful to bring this manual along with you to help security personnel understand the REMstar SE device.

If you are traveling to a country with a line voltage different than the one you are currently using, a different power cord or an international plug adaptor may be required to make your power cord compatible with the power outlets of the country to which you are traveling. Contact your home care provider for additional information.

Airline Travel

The REMstar SE device is suitable for use on airlines when the device is operating from an AC or DC power source.

Note: It is not suitable for airline use with any of the modems or humidifiers installed in the unit.

Cleaning the Device

WARNING: To avoid electrical shock, always unplug the power cord from the wall outlet before cleaning the device. DO NOT immerse the device in any fluids.

1. Unplug the device, and wipe the outside of the device with a cloth slightly dampened with water and a mild detergent. Let the device dry completely before plugging in the power cord.
2. Inspect the device and all circuit parts for damage after cleaning. Replace any damaged parts.

Cleaning or Replacing the Filters

Under normal usage, you should clean the gray foam filter at least once every two weeks and replace it with a new one every six months. The white ultra-fine filter is disposable and should be replaced after 30 nights of use or sooner if it appears dirty. DO NOT clean the ultra-fine filter.

CAUTION: Dirty inlet filters may cause high operating temperatures that may affect device performance. Regularly examine the inlet filters as needed for integrity and cleanliness.

1. If the device is operating, stop the airflow. Disconnect the device from the power source.
2. Remove the filter(s) from the enclosure by gently squeezing the filter in the center and pulling it away from the device.
3. Examine the filter(s) for cleanliness and integrity.
4. Wash the gray foam filter in warm water with a mild detergent. Rinse thoroughly to remove all detergent residue. Allow the filter to air dry completely before reinstalling it. If the foam filter is torn, replace it. (Only Philips Respironics-supplied filters should be used as replacement filters.)
5. If the white ultra-fine filter is dirty or torn, replace it.
6. Reinstall the filters, inserting the white ultra-fine filter first if applicable.

CAUTION: Never install a wet filter into the device. You must ensure sufficient drying time for the cleaned filter.

Cleaning the Tubing

Clean the flexible tubing before first use and daily. Disconnect the flexible tubing from the device. For the 15 or 22 mm flexible tubing, gently wash the tubing in a solution of warm water and a mild detergent. Rinse thoroughly. Air dry.

Note: Refer to the humidifier manual for the instructions on how to clean the heated tube.

Service

The device does not require routine servicing.

WARNING: If you notice any unexplained changes in the performance of this device, if it is making unusual or harsh sounds, if it has been dropped or mishandled, if water is spilled into the enclosure, or if the enclosure is broken, disconnect the power cord and discontinue use. Contact your home care provider.

Questions? Contact FDA/CDRH/OCE/DID at CDRH-FOISTATUS@fda.hhs.gov or call 301-796-8118.

Records processed under FOIA Request #2015-1305; Released by CDRH on 05-11-2016.

Specifications

Environmental

Operating Temperature: 5° to 35° C (41° to 95° F)
Storage Temperature: -20° to 60° C (-4° to 140° F)
Relative Humidity (operating & storage): 15 to 95% (non-condensing)
Atmospheric Pressure: 101 to 77 kPa (0 - 2286 m / 0 - 7500 ft)

Physical

Dimensions: 18 x 14 x 10 cm (7" L x 5.5" W x 4" H)
Weight (Device with power supply): Approximately 1.53 kg (3.37 lbs)

IEC 60601-1 Classification

Type of Protection Against Electric Shock: Class II Equipment
Degree of Protection Against Electric Shock: Type BF Applied Part
Degree of Protection against Ingress of Water:
Device: Drip Proof, IP22
80W power supply: Drip Proof, IP22
Mode of Operation: Continuous

Electrical

AC Power Consumption (with 80W power supply): 100 – 240 VAC, 50/60 Hz, 2.0 A
DC Power Consumption: 12 VDC, 6.67 A
Fuses: There are no user-replaceable fuses.

Noise

Sound Pressure Level: < 29 dB(A)
This measurement applies to the therapy device with or without the optional humidifier.
Sound Power Level: < 37 dB(A)

Questions? Contact FDA/CDRH/OCE/DID at CDRH-FOISTATUS@fda.hhs.gov or call 301-796-8118.

Records processed under FOIA Request #2015-1305; Released by CDRH on 05-11-2016.

Pressure Accuracy

Pressure Increments: 4.0 to 20.0 cm H_2O (in 0.5 cm H_2O increments)

Pressure Stability:

	Static	Dynamic < 10 cm H_2O	Dynamic ≥ 10.0 to 20 cm H_2O
Device	± 1.0 cm H_2O	≤ 2.0 cm H_2O	≤ 2.0 cm H_2O
Device w/ Humidifier (22 mm tubing)	± 1.0 cm H_2O	≤ 2.0 cm H_2O	≤ 2.0 cm H_2O
Device w/ Humidifier (15 mm tubing)	± 1.0 cm H_2O	≤ 2.0 cm H_2O	≤ 2.5 cm H_2O

Maximum Flow Rate (typical)

		Test pressures (cm H_2O)				
		4.0	**8.0**	**12.0**	**16.0**	**20.0**
22 mm tubing	**Measured pressure at the patient connection port (cm H_2O)**	3.0	7.0	11.0	15.0	19.0
	Average flow at the patient connection port (l/min)	52.0	60.8	68.6	73.7	75.1
15 mm tubing (heated or non-heated)	**Measured pressure at the patient connection port (cm H_2O)**	3.8	7.0	11.0	15.0	19.0
	Average flow at the patient connection port (l/min)	85.1	120.7	121.6	119.3	119.2

Disposal

Separate collection for electrical and electronic equipment per EC Directive 2002/96/EC. Dispose of this device in accordance with local regulations.

How to Contact Philips Respironics

To have your device serviced, contact your home care provider. If you need to contact Philips Respironics directly, call the Philips Respironics Customer Service department at 1-800-345-6443 or 1-724-387-4000. You can also use the following address:

Respironics, Inc.
1001 Murry Ridge Lane
Murrysville, PA 15668

Questions? Contact FDA/CDRH/OCE/DID at CDRH-FOISTATUS@fda.hhs.gov or call 301-796-8118.

Records processed under FOIA Request #2015-1305; Released by CDRH on 05-11-2016.

EMC Information

Guidance and Manufacturer's Declaration - Electromagnetic Emissions – This device is intended for use in the electromagnetic environment specified below. The user of this device should make sure it is used in such an environment.

Emissions Test	Compliance	Electromagnetic Environment - Guidance
RF emissions CISPR 11	Group 1	The device uses RF energy only for its internal function. Therefore, its RF emissions are very low and are not likely to cause any interference in nearby electronic equipment.
RF emissions CISPR 11	Class B	The device is suitable for use in all establishments, including domestic establishments and those directly connected to the public low-voltage power supply network.
Harmonic emissions IEC 61000-3-2	Class A	
Voltage fluctuations/Flicker emissions IEC 61000-3-3	Complies	

Guidance and Manufacturer's Declaration - Electromagnetic Immunity – This device is intended for use in the electromagnetic environment specified below. The user of this device should make sure it is used in such an environment.

Immunity Test	IEC 60601 Test Level	Compliance Level	Electromagnetic Environment - Guidance
Electrostatic Discharge (ESD) IEC 61000-4-2	±6 kV contact ±8 kV air	±6 kV contact ±8 kV air	Floors should be wood, concrete or ceramic tile. If floors are covered with synthetic material, the relative humidity should be at least 30%.
Electrical fast Transient/burst IEC 61000-4-4	±2 kV for power supply lines ±1 kV for input-output lines	±2 kV for supply mains ±1 kV for input/output lines	Mains power quality should be that of a typical home or hospital environment.
Surge IEC 61000-4-5	±1 kV differential mode ±2 kV common mode	±1 kV differential mode ±2 kV for common mode	Mains power quality should be that of a typical home or hospital environment.
Voltage dips, short interruptions and voltage variations on power supply input lines IEC 61000-4-11	<5% U_T (>95% dip in U_T) for 0.5 cycle 40% U_T (60% dip in U_T) for 5 cycles 70% U_T (30% dip in U_T) for 25 cycles <5% U_T (>95% dip in U_T) for 5 sec	<5% U_T (>95% dip in U_T) for 0.5 cycle 40% U_T (60% dip in U_T) for 5 cycles 70% U_T (30% dip in U_T) for 25 cycles <5% U_T (>95% dip in U_T) for 5 sec	Mains power quality should be that of a typical home or hospital environment. If the user of the device requires continued operation during power mains interruptions, it is recommended that the device be powered from an uninterruptible power supply or a battery.
Power frequency (50/60 Hz) magnetic field IEC 61000-4-8	3 A/m	3 A/m	Power frequency magnetic fields should be at levels characteristic of a typical location in a typical hospital or home environment.
NOTE: U_T is the a.c. mains voltage prior to application of the test level.			

Questions? Contact FDA/CDRH/OCE/DID at CDRH-FOISTATUS@fda.hhs.gov or call 301-796-8118.

Records processed under FOIA Request #2015-1305; Released by CDRH on 05-11-2016.

Guidance and Manufacturer's Declaration - Electromagnetic Immunity – This device is intended for use in the electromagnetic environment specified below. The user of this device should make sure it is used in such an environment.

Immunity Test	IEC 60601 Test Level	Compliance Level	Electromagnetic Environment -Guidance
Conducted RF IEC 61000-4-6 Radiated RF IEC 61000-4-3	3 Vrms 150 kHz to 80 MHz 3 V/m 80 MHz to 2.5 GHz	3 Vrms 3 V/m	Portable and mobile RF communications equipment should be used no closer to any part of the device, including cables, than the recommended separation distance calculated from the equation applicable to the frequency of the transmitter. Recommended separation distance $d = 1.2 \sqrt{P}$ $d = 1.2 \sqrt{P}$ 80 MHz to 800 MHz $d = 2.3 \sqrt{P}$ 800 MHz to 2.5 GHz where P is the maximum output power rating of the transmitter in watts (W) according to the transmitter manufacturer and d is the recommended separation distance in meters (m). Field strengths from fixed RF transmitters, as determined by an electromagnetic site survey[a], should be less than the compliance level in each frequency range.[b] Interference may occur in the vicinity of equipment marked with the following symbol:

NOTE 1 At 80 MHz and 800 MHz, the higher frequency range applies.
NOTE 2 These guidelines may not apply in all situations. Electromagnetic propagation is affected by absorption and reflection from structures, objects, and people.

a Field strengths from fixed transmitters, such as base stations for radio (cellular/cordless) telephones and land mobile radios, amateur radio, AM and FM radio broadcast and TV broadcast cannot be predicted theoretically with accuracy. To assess the electromagnetic environment due to fixed RF transmitters, an electromagnetic site survey should be considered. If the measured field strength in the location in which the device is used exceeds the applicable RF compliance level above, the device should be observed to verify normal operation. If abnormal performance is observed, additional measures may be necessary, such as re-orienting or relocating the device.

b Over the frequency range 150 kHz to 80 MHz, the field strengths should be less than 3 V/m.

Recommended Separation Distances between Portable and Mobile RF Communications Equipment and This Device: The device is intended for use in an electromagnetic environment in which radiated RF disturbances are controlled. The customer or the user of this device can help prevent electromagnetic interference by maintaining a minimum distance between portable and mobile RF communications equipment (transmitters) and this device as recommended below, according to the maximum output power of the communications equipment.

Rated Maximum Power Output of Transmitter W	Separation Distance According to Frequency of Transmitter m		
	150 kHz to 80 MHz $d = 1.2 \sqrt{P}$	80 MHz to 800 MHz $d = 1.2 \sqrt{P}$	800 MHz to 2.5 GHz $d = 2.3 \sqrt{P}$
0.01	0.12	0.12	0.23
0.1	0.38	0.38	0.73
1	1.2	1.2	2.3
10	3.8	3.8	7.3
100	12	12	23

For transmitters rated at a maximum output power not listed above, the recommended separation distance *d* in meters (m) can be estimated using the equation applicable to the frequency of the transmitter, where P is the maximum output power rating of the transmitter in watts (W) according to the transmitter manufacturer.
Note 1: At 80 MHz and 800 MHz, the separation distance for the higher frequency range applies.
Note 2: These guidelines may not apply in all situations. Electromagnetic propagation is affected by absorption and reflection from structures, objects, and people.

Questions? Contact FDA/CDRH/OCE/DID at CDRH-FOISTATUS@fda.hhs.gov or call 301-796-8118.

Records processed under FOIA Request #2015-1305; Released by CDRH on 05-11-2016.

Limited Warranty

Respironics, Inc. warrants that the system shall be free from defects of workmanship and materials and will perform in accordance with the product specifications for a period of two (2) years from the date of sale by Respironics, Inc. to the dealer. If the product fails to perform in accordance with the product specifications, Respironics, Inc. will repair or replace – at its option – the defective material or part. Respironics, Inc. will pay customary freight charges from Respironics, Inc. to the dealer location only. This warranty does not cover damage caused by accident, misuse, abuse, alteration, water ingress, and other defects not related to material or workmanship. The Respironics, Inc. Service department shall examine any devices returned for service, and Respironics, Inc. reserves the right to charge an evaluation fee for any returned device as to which no problem is found after investigation by Respironics, Inc. Service.

This warranty is non-transferable by unauthorized distributors of Respironics, Inc. products and reserves the right to charge dealers for warranty service of failed product not purchased directly from Respironics, Inc. or authorized distributors.

Respironics, Inc. disclaims all liability for economic loss, loss of profits, overhead, or consequential damages which may be claimed to arise from any sale or use of this product. Some states do not allow the exclusion or limitation of incidental or consequential damages, so the above limitation or exclusion may not apply to you.

This warranty is given in lieu of all other express warranties. In addition, any implied warranties – including any warranty of merchantability or fitness for the particular purpose – are limited to two years. Some states do not allow limitations on how long an implied warranty lasts, so the above limitation may not apply to you. This warranty gives you specific legal rights, and you may also have other rights which vary from state to state.

To exercise your rights under this warranty, contact your local authorized Respironics, Inc. dealer or contact Respironics, Inc. at:

1001 Murry Ridge Lane

Murrysville, Pennsylvania 15668-8550

1-724-387-4000

Questions? Contact FDA/CDRH/OCE/DID at CDRH-FOISTATUS@fda.hhs.gov or call 301-796-8118.

Records processed under FOIA Request #2015-1305; Released by CDRH on 05-11-2016.

REF **1096462**

Respironics Inc.
1001 Murry Ridge Lane
Murrysville, PA 15668 USA

1096314 R00
JR 1/26/2012
EN-DOM

Questions? Contact FDA/CDRH/OCE/DID at CDRH-FOISTATUS@fda.hhs.gov or call 301-796-8118.

Records processed under FOIA Request #2015-1305; Released by CDRH on 05-11-2016.

REMstar SE Provider Manual

(Please turn the page)

© 2013 Koninklijke Philips Electronics N.V. All Rights Reserved
Questions? Contact FDA/CDRH/OCE/DID at CDRH-FOISTATUS@fda.hhs.gov or call 301-796-8118.

Records processed under FOIA Request #2015-1305; Released by CDRH on Jan 11, 2016

PHILIPS
RESPIRONICS

IMPORTANT! *Remove this guide before giving the device to the patient. Only medical professionals should adjust pressure settings.*

This guide provides you with instructions on how to access and navigate the provider screens used to modify device settings. Refer to the *User Manual* for more information.

Note: The screens shown throughout this guide are examples only. Actual screens may vary slightly.

Accessing the Provider Mode Screens

Accessing provider mode unlocks settings that cannot be modified by the user. To access provider mode:

1. Supply Power to the device. First, plug the socket end of the AC power cord into the power supply. Then plug the pronged end of the AC power cord into an electrical outlet that is not controlled by a wall switch. Finally, plug the power supply cord's connector into the power inlet on the back of the device.
2. Once the device is powered, press and hold both the Ramp Button and the LEFT navigation button on the device for at least 10 seconds.
3. The Provider menu screen will display "P-1" indicating that you are now in provider mode.

Questions? Contact FDA/CDRH/OCE/DID at CDRH-FOISTATUS@fda.hhs.gov or call 301-796-8118.

Recommended Provider Screen Mode Settings, Rev #2015-1305; Released by CDRH on 05-11-2016.

Navigating the Provider Mode Settings

Use the LEFT/RIGHT button (◁ ▯ ▷) to navigate the provider settings, shown here.

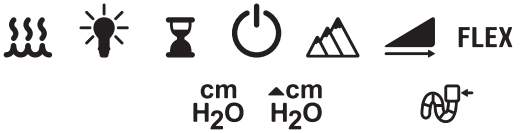

Once you highlight the setting that you want to change, press the SELECT button (⏻). You can then use the LEFT/RIGHT button (◁ ▯ ▷) to adjust that setting. Press the SELECT button again to save the new setting. The additional settings for the provider only are described here: (The other settings are exactly the same as listed in the User Manual.)

Note: When the Therapy icon (⏻) is highlighted, the screen will display "P-1" indicating that you are in provider mode. If you then press the SELECT button (⏻) the screen will briefly display "P-0" and you will exit out of the provider mode. The device will also automatically exit out of provider mode after 1 minute of inactivity.

Icon	Name	Description
cm H_2O	Pressure Adjustment setting	This screen allows you to modify the current CPAP pressure setting. Once you press the SELECT button to choose this setting, the number will blink. Use the LEFT/RIGHT button to adjust the setting from 4 to 20 cm H_2O in 0.5 cm H_2O increments. Press the SELECT button again to save the new setting.
▲cm H_2O	Fine Pressure Adjustment setting	The fine pressure adjustment screen allows you to calibrate the device so that the pressure setting can be verified with a manometer. Once you press the SELECT button to choose this setting, the number will blink. Use the LEFT/RIGHT button to increase or decrease this setting from -1.9 to +1.9 cm H_2O in 0.1 cm H_2O increments. Press the SELECT button again to save the new setting. If you want to calibrate the device, follow the instructions for verifying the pressure in this guide.
FLEX	Flex setting	The Flex comfort feature allows you to adjust the level of air pressure relief that the patient feels when they exhale during therapy. The setting of "1" provides a small amount of pressure relief, with higher numbers providing additional relief. The setting of "0" will turn the Flex comfort feature off. Once you press the SELECT button to choose this setting, the number will blink. Use the LEFT/RIGHT button to toggle between the available settings: 0, 1, 2, 3, L0, L1, L2 or L3. Press the SELECT button again to choose the setting. If you do not want the patient to change this setting, choose the setting with an "L" before the number and this will lock the setting.

Questions? Contact FDA/CDRH/OCE/DID at CDRH-FOISTATUS@fda.hhs.gov or call 301-796-8118.

Recorded Released under FOIA Request #2015-1305; Released by CDRH on 05-11-2016.

Flex Comfort Feature

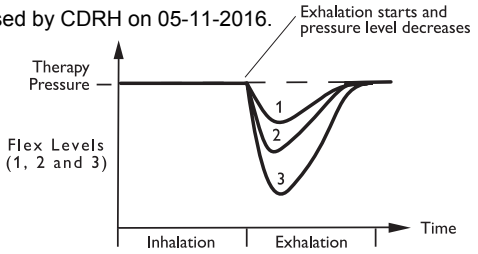

The device consists of a special comfort feature called Flex. When Flex is enabled, it enhances patient comfort by providing pressure relief during the expiratory phase of breathing. In the diagram, the dashed line represents normal CPAP therapy in comparison to the bold line representing Flex. Flex levels of 1, 2, or 3 progressively reflect increased pressure relief.

Flex pressure relief is determined by the Flex setting and the amount of patient flow. Flex returns to the set pressure by the end of exhalation, when the airway is most vulnerable to closure.

Note: The patient also has access to this setting.

Ramp

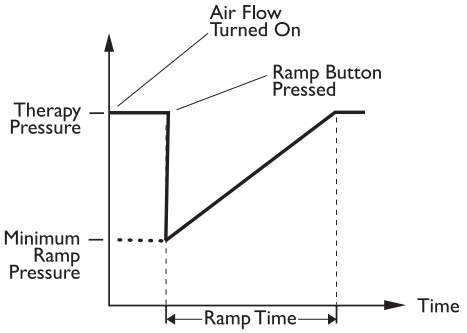

The device is equipped with a linear ramp feature that allows patients to reduce the pressure and then gradually increase (ramp) the pressure to the prescription pressure setting so they can fall asleep more comfortably. The diagram illustrates how the ramp feature works.

Data Reset for Multiple Users

If you are using the device on multiple users, you must reset the therapy hours before each patient. While the device is in Provider mode and therapy hours (⌛) is selected, press and hold both the Ramp Button (⊿) and the RIGHT navigation button (▯▷) on the device for 5 seconds. The device will count down from 5 to 0 and then erase the therapy hours. The device will reboot once the therapy hours are reset.

Cleaning for Multiple Users

WARNING: If you are using the device on multiple users, discard and replace the bacteria filter each time the device is used on a different person.

If you are using the device on multiple users, complete the following steps to clean the device before each new user.

1. Unplug the device before cleaning.
2. Clean the outside of the device only. Use a cloth with one of the following cleaning agents to clean the exterior of the device:
   - Mild Detergent
   - 70% Isopropyl Alcohol
   - DisCide Towelettes
   - 10% Chlorine Bleach solution
3. Allow the device to dry completely before plugging in the power cord.

Questions? Contact FDA/CDRH/OCE/DID at CDRH-FOISTATUS@fda.hhs.gov or call 301-796-8118.

Reviewed and processed under FOIA Request #2015-1305; Released by CDRH on 05-11-2016.

Verifying the Pressure

WARNING: If the device fails to perform within the stated specifications, have the system serviced by a qualified Philips Respironics-approved service facility.

If part of your patient setup procedure is to verify actual pressure with a manometer, please use the following instructions to ensure that the device is functioning properly. You will need the following equipment to verify the pressure:

- Philips Respironics Pressure Calibration Kit
  Kit Includes:
  - Philips Respironics Whisper Swivel II
  - Philips Respironics O_2 Enrichment Final Assembly
  - Closed end cap
- Philips Respironics flexible tubing
- Pressure tubing
- Philips Respironics Digital Manometer or equivalent
  Minimum Specifications:
  - 0 - 25 cm H_2O (or better)
  - ± 0.3 cm H_2O accuracy
  - ± 0.1 cm H_2O resolution
- Foam filter

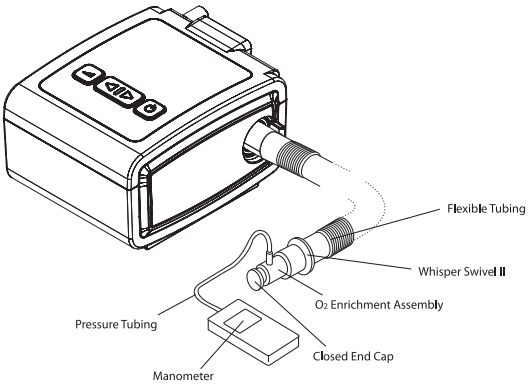

To verify the pressure, complete the following steps:

1. Install the foam filter into the back of the device.
2. With the device unplugged, connect the system as illustrated in the diagram.
3. Turn the manometer on. If it does not display a reading of zero, adjust the manometer to calibrate it. If the manometer has variable settings for devices, set it to cm H_2O.
4. Supply power to the device then place the device in provider mode.
5. Set the therapy parameters according to the patient specific data.
6. Set the device to the specific pressure value for the patient.
7. Verify that the pressure setting matches the pressure displayed on the manometer. If the pressure setting does not match the measured value for the device, use the Fine Pressure Adjustment setting (found in the Provider mode settings) to adjust the pressure. Any problems, contact Philips Respironics or an authorized service center to have the device serviced.

   Note: Output pressures may vary at local altitude and barometric pressure. Because of these factors, devices may slightly vary in output pressure over the range of the altitude settings.
8. Set up the remaining parameters and exit provider mode. The unit is ready for patient use.

Questions? Contact FDA/CDRH/OCE/DID at CDRH-FOISTATUS@fda.hhs.gov or call 301-796-8118.

This document was processed under FOIA Request #2015-1305; Released by CDRH on 05-11-2016.

EMC Information

Guidance and Manufacturer's Declaration - Electromagnetic Emissions – This device is intended for use in the electromagnetic environment specified below. The user of this device should make sure it is used in such an environment.

Emissions Test	Compliance	Electromagnetic Environment - Guidance
RF emissions CISPR 11	Group 1	The device uses RF energy only for its internal function. Therefore, its RF emissions are very low and are not likely to cause any interference in nearby electronic equipment.
RF emissions CISPR 11	Class B	The device is suitable for use in all establishments, including domestic establishments and those directly connected to the public low-voltage power supply network.
Harmonic emissions IEC 61000-3-2	Class A	
Voltage fluctuations/Flicker emissions IEC 61000-3-3	Complies	

Guidance and Manufacturer's Declaration - Electromagnetic Immunity – This device is intended for use in the electromagnetic environment specified below. The user of this device should make sure it is used in such an environment.

Immunity Test	IEC 60601 Test Level	Compliance Level	Electromagnetic Environment - Guidance
Electrostatic Discharge (ESD) IEC 61000-4-2	±6 kV contact ±8 kV air	±6 kV contact ±8 kV air	Floors should be wood, concrete or ceramic tile. If floors are covered with synthetic material, the relative humidity should be at least 30%.
Electrical fast Transient/burst IEC 61000-4-4	±2 kV for power supply lines ±1 kV for input-output lines	±2 kV for supply mains ±1 kV for input/output lines	Mains power quality should be that of a typical home or hospital environment.
Surge IEC 61000-4-5	±1 kV differential mode ±2 kV common mode	±1 kV differential mode ±2 kV for common mode	Mains power quality should be that of a typical home or hospital environment.
Voltage dips, short interruptions and voltage variations on power supply input lines IEC 61000-4-11	<5% U_T (>95% dip in U_T) for 0.5 cycle 40% U_T (60% dip in U_T) for 5 cycles 70% U_T (30% dip in U_T) for 25 cycles <5% U_T (>95% dip in U_T) for 5 sec	<5% U_T (>95% dip in U_T) for 0.5 cycle 40% U_T (60% dip in U_T) for 5 cycles 70% U_T (30% dip in U_T) for 25 cycles <5% U_T (>95% dip in U_T) for 5 sec	Mains power quality should be that of a typical home or hospital environment. If the user of the device requires continued operation during power mains interruptions, it is recommended that the device be powered from an uninterruptible power supply or a battery.
Power frequency (50/60 Hz) magnetic field IEC 61000-4-8	3 A/m	3 A/m	Power frequency magnetic fields should be at levels characteristic of a typical location in a typical hospital or home environment.
NOTE: U_T is the a.c. mains voltage prior to application of the test level.			

Questions? Contact FDA/CDRH/OCE/DID at CDRH-FOISTATUS@fda.hhs.gov or call 301-796-8118.

Records processed under FOIA Request #2015-1305, Released by CDRH on 05-11-2016.

Guidance and Manufacturer's Declaration - Electromagnetic Immunity - This device is intended for use in the electromagnetic environment specified below. The user of this device should make sure it is used in such an environment.

Immunity Test	IEC 60601 Test Level	Compliance Level	Electromagnetic Environment -Guidance
Conducted RF IEC 61000-4-6 Radiated RF IEC 61000-4-3	3 Vrms 150 kHz to 80 MHz 3 V/m 80 MHz to 2.5 GHz	3 Vrms 3 V/m	Portable and mobile RF communications equipment should be used no closer to any part of the device, including cables, than the recommended separation distance calculated from the equation applicable to the frequency of the transmitter. Recommended separation distance $d = 1.2 \sqrt{P}$ $d = 1.2 \sqrt{P}$ 80 MHz to 800 MHz $d = 2.3 \sqrt{P}$ 800 MHz to 2.5 GHz where P is the maximum output power rating of the transmitter in watts (W) according to the transmitter manufacturer and d is the recommended separation distance in meters (m). Field strengths from fixed RF transmitters, as determined by an electromagnetic site survey[a], should be less than the compliance level in each frequency range.[b] Interference may occur in the vicinity of equipment marked with the following symbol:

NOTE 1 At 80 MHz and 800 MHz, the higher frequency range applies.

NOTE 2 These guidelines may not apply in all situations. Electromagnetic propagation is affected by absorption and reflection from structures, objects, and people.

a Field strengths from fixed transmitters, such as base stations for radio (cellular/cordless) telephones and land mobile radios, amateur radio, AM and FM radio broadcast and TV broadcast cannot be predicted theoretically with accuracy. To assess the electromagnetic environment due to fixed RF transmitters, an electromagnetic site survey should be considered. If the measured field strength in the location in which the device is used exceeds the applicable RF compliance level above, the device should be observed to verify normal operation. If abnormal performance is observed, additional measures may be necessary, such as re-orienting or relocating the device.

b Over the frequency range 150 kHz to 80 MHz, the field strengths should be less than 3 V/m.

Questions? Contact FDA/CDRH/OCE/DID at CDRH-FOISTATUS@fda.hhs.gov or call 301-796-8118.

Records processed under FOIA Request #2015-1305, Released by CDRH on 05-11-2016.

Recommended Separation Distances between Portable and Mobile RF Communications Equipment and This Device: The device is intended for use in an electromagnetic environment in which radiated RF disturbances are controlled. The customer or the user of this device can help prevent electromagnetic interference by maintaining a minimum distance between portable and mobile RF communications equipment (transmitters) and this device as recommended below, according to the maximum output power of the communications equipment.

Rated Maximum Power Output of Transmitter W	Separation Distance According to Frequency of Transmitter m		
	150 kHz to 80 MHz $d = 1.2\sqrt{P}$	**80 MHz to 800 MHz** $d = 1.2\sqrt{P}$	**800 MHz to 2.5 GHz** $d = 2.3\sqrt{P}$
0.01	0.12	0.12	0.23
0.1	0.38	0.38	0.73
1	1.2	1.2	2.3
10	3.8	3.8	7.3
100	12	12	23

For transmitters rated at a maximum output power not listed above, the recommended separation distance *d* in meters (m) can be estimated using the equation applicable to the frequency of the transmitter, where P is the maximum output power rating of the transmitter in watts (W) according to the transmitter manufacturer.
Note 1: At 80 MHz and 800 MHz, the separation distance for the higher frequency range applies.
Note 2: These guidelines may not apply in all situations. Electromagnetic propagation is affected by absorption and reflection from structures, objects, and people.

Questions? Contact FDA/CDRH/OCE/DID at CDRH-FOISTATUS@fda.hhs.gov or call 301-796-8118.

Records processed under FOIA Request #2015-1305; Released by CDRH on 05-11-2016.

REF **1096501**

Respironics Inc.
1001 Murry Ridge Lane
Murrysville, PA 15668 USA

1096413 R00
JR 1/26/2012
EN-DOM

Questions? Contact FDA/CDRH/OCE/DID at CDRH-FOISTATUS@fda.hhs.gov or call 301-796-8118.

Records processed under FOIA Request #2015-1305; Released by CDRH on 05-11-2016.

REMstar SE Device Warning Label

(Please turn the page)

© 2013 Koninklijke Philips Electronics N.V. All Rights Reserved
Questions? Contact FDA/CDRH/OCE/DID at CDRH-FOISTATUS@fda.hhs.gov or call 301-796-8118.

Records processed under FOIA Request #2015-1305; Released by CDRH on 05-11-2016.

Respironics Inc.
1001 Murry Ridge Lane
Murrysville, PA 15668 USA

Rx ONLY

12 V ⎓ 6.67 A

IP22

ETL CLASSIFIED

3194661

Complies with
RTCA/DO-160F
section 21, category M

Conforms to UL Std. 60601-1
Certified to CAN/CSA Std. C22.2
No. 601.1

Use only with power supply:

80W REF 1091399

This is a medical device.

Questions? Contact FDA/CDRH/OCE/DID at CDRH-FOISTATUS@fda.hhs.gov or call 301-796-8118.

Records processed under FOIA Request #2015-1305; Released by CDRH on 05-11-2016.

System One Heated Humidifier Manual

(Please turn the page)

© 2013 Koninklijke Philips Electronics N.V. All Rights Reserved
Questions? Contact FDA/CDRH/OCE/DID at CDRH-FOISTATUS@fda.hhs.gov or call 301-796-8118.

Records processed under FOIA Request #2015-1305; Released by CDRH on 05-11-2016.

System One Heated Humidifier with Heated Tubing

USER MANUAL

PHILIPS RESPIRONICS

Questions? Contact FDA/CDRH/OCE/DID at CDRH-FOISTATUS@fda.hhs.gov or call 301-796-8118.

Records processed under FOIA Request #2015-1305; Released by CDRH on 05-11-2016.

© 2011 Koninklijke Philips Electronics N.V. All rights reserved.
Questions? Contact FDA/CDRH/OCE/DID at CDRH-FOISTATUS@fda.hhs.gov or call 301-796-8118.

Records processed under FOIA Request #2015-1305; Released by CDRH on 05-11-2016.

Table of Contents

Questions? Contact FDA/CDRH/OCE/DID at CDRH-FOISTATUS@fda.hhs.gov or call 301-796-8118.

Records processed under FOIA Request #2015-1305; Released by CDRH on 05-11-2016.

CAUTION: U. S. Federal law restricts this device to sale by or on the order of a physician.

Intended Use

The Heated Humidifier is an accessory for the Respironics REMstar SE which provides moisture to the patient circuit. It is intended for use in spontaneously breathing patients weighing over 30 kg (66 lbs), in the home or hospital/ institutional environment, who use mask-applied positive pressure ventilation therapy.

Warnings

A warning indicates the possibility for injury to the user or the operator.

- Use the humidifier only for its intended use as described in this manual. Use only with Respironics full-face masks, nasal masks and connectors.
- Periodically inspect the humidifier for signs of wear or damage. Never operate the humidifier if any parts are damaged, if it is not working properly, or if the humidifier has been dropped or mishandled. Do not use the humidifier if the water tank is leaking or damaged in any way. Have any damaged parts replaced before continuing use.
- Periodically inspect the humidifier power cord for signs of wear or damage. If it becomes worn or damaged, contact Respironics or your home care provider for a replacement.
- The humidifier must always be positioned below the breathing circuit connection at the mask and the air outlet on the device. The humidifier must be level for proper operation.
- Allow the humidifier heater plate and water to cool down for approximately 15 minutes before removing the water tank. A burn may result from: touching the heater plate, coming in contact with the heated water, or touching the tank pan.
- This equipment is not suitable for use in the presence of a flammable anesthetic mixture with air or with oxygen or nitrous oxide.
- When installing the water tank, do not allow any water to spill into the humidifier or therapy device.
- If you notice any unexplained changes in the performance of this device, if it is making unusual or harsh sounds, if it has been dropped or mishandled, if water is spilled into the enclosure, or if the enclosure is broken, disconnect the power cord from the therapy device and discontinue use. Contact your home care provider.
- Before cleaning the humidifier, always remove from the therapy device.
- Empty and clean the water tank daily to prevent mold and bacteria growth. Wipe the seal completely.

Note: Please see the "Limited Warranty" section of this manual for information on warranty coverage.

Cautions

A caution indicates the possibility of damage to the device.

- Do not place the humidifier directly onto carpet, fabric, or other flammable materials.
- Do not place the device in or on any container that can collect or hold water. Take precautions to protect furniture from water damage.
- Do not fill the water tank above the maximum fill line. Damage to the humidifier or therapy device may occur. If the water tank is overfilled, water may leak out of the tank inlet (located on the back of the tank) when installing the tank lid.
- Use only room temperature distilled water in the tank. Do not put any chemicals or additives into the water. Possible airway irritation or damage to the water tank may result.
- Remove the tank, empty all water, and replace the empty tank before transporting the humidifier base.
- Do not attempt to fill the water tank while it is still inside the humidifier.
- To avoid spilling, do not disconnect the humidifier from the therapy device with water in the tank. Remove the water tank from the humidifier before disconnecting the therapy device.
- Do not turn the humidifier on without the water tank installed. The Humidifier number setting must remain on 0 if there is no water in the water tank.
- The humidifier door must be set in the open position before removing the water tank. Do not remove the water tank without making sure that the humidifier door locks into the open position.
- Do not move the humidifier while the water tank has water in it.
- Use a mild liquid dishwashing detergent only for either hand washing or when using a dishwasher.
- Only the hospital and institution cleaning procedures listed in this manual are recommended by Respironics. Use of other cleaning and disinfecting processes, not specified by Respironics, may affect the performance of the product.

Questions? Contact FDA/CDRH/OCE/DID at CDRH-FOISTATUS@fda.hhs.gov or call 301-796-8118.

Records processed under FOIA Request #2015-1305; Released by CDRH on 05-11-2016.

Contraindications

Studies have shown that the following pre-existing conditions may contraindicate the use of CPAP therapy for some patients:

- Bullous Lung Disease
- Pathologically Low Blood Pressure
- Bypassed Upper Airway
- Pneumothorax
- Pneumocephalus has been reported in a patient using nasal Continuous Positive Airway Pressure. Caution should be used when prescribing CPAP for susceptible patients such as those with: cerebral spinal fluid (CSF) leaks, abnormalities of the cribriform plate, prior history of head trauma, and/or pneumocephalus. (Chest 1989; 96:1425-1426)

The use of positive airway pressure therapy may be temporarily contraindicated if you exhibit signs of a sinus or middle ear infection. Not for use with patients whose upper airways are bypassed. Contact your health care professional if you have any questions concerning your therapy.

Refer to the instructions for use that accompanied your therapy device for any additional contraindications that may be specific to the use of that device.

Symbol Key

The following symbols appear on the device:

Symbol	Definition		Symbol	Definition
MAX	Maximum Fill Line		IPX1	Drip Proof Equipment
	Hot Water, Hot Surface			Type BF Applied Part
	Follow Instructions for Use			

System Overview

The System One Heated Humidifier with Heated Tubing is designed to deliver humidification to provide added comfort during therapy. This humidification level is controlled through the output of the heated humidifier as well as the temperature of the optional heated tubing. Use of these two accessories allows for a comfortable level of humidity to be maintained at the mask.

The System One Heated Humidifier attaches to the therapy device and provides an air outlet port to connect a breathing circuit. The breathing circuit is comprised of patient tubing, a mask, and in some instances a separate exhalation device. The patient tubing can be Respironics heated tubing, 22 mm (non-heated) performance tubing or 15 mm (non-heated) performance tubing. For information related to the mask to be used, including any need for a separate exhalation device, consult the instructions for use that accompany both the mask and therapy device.

The System One Heated Humidifier is comprised of the following components:

- **Heated Humidifier** - The heated humidifier is the primary source of humidification. Humidification is controlled by adjusting the temperature of the heater plate. The heater plate is then used to heat water found in the water tank. This manual includes instructions that explain how to set up and take of the heated humidifier. For instructions on how to adjust the output of the heated humidifier, refer to the instructions for use that accompanied the therapy device.
- **Water Tank** - The water tank stores the water that will be used by the heated humidifier. This manual includes instructions that cover how to fill up and take care of the water tank.
- **Heated Tubing** - The heated tubing is an optional accessory that is used, along with the heated humidifier, to control the provided humidification. This is accomplished by controlling the temperature of the air in order to ensure that it does not cool down prior to reaching the mask. This manual includes instructions that cover how to connect and take care of the heated tubing. For instructions on how to adjust the temperature of the heated tubing, refer to the instructions for use that accompanied the therapy device.

Questions? Contact FDA/CDRH/OCE/DID at CDRH-FOISTATUS@fda.hhs.gov or call 301-796-8118.

Records processed under FOIA Request #2015-1305; Released by CDRH on 05-11-2016.

System Features and Contents

IMPORTANT: Read and understand the entire manual for your therapy device before attempting to use this humidifier.

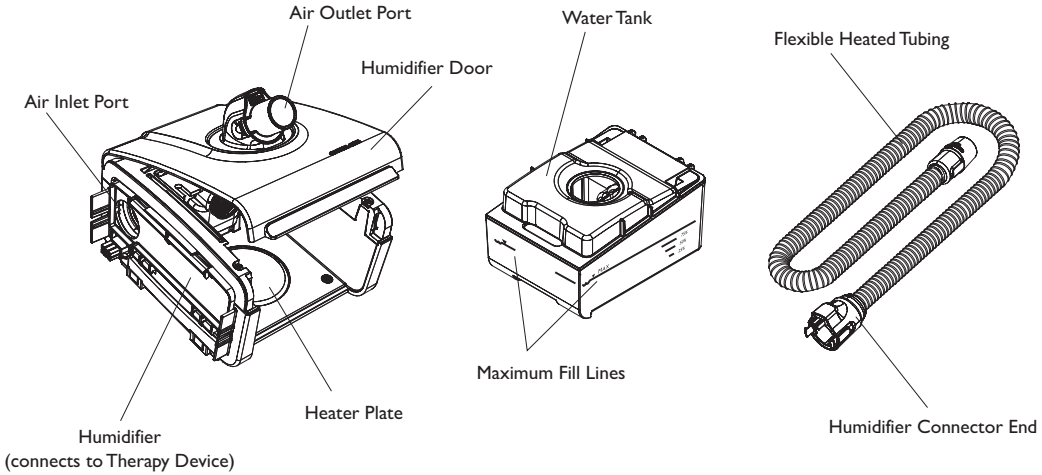

This figure illustrates many of the device features and contents, described in the table below.

Item	Description
Humidifier	Connect your therapy device here.
Air Inlet Port	Connects to the outlet port on the therapy device.
Air Outlet Port (conical, 22 mm)	Connect the heated tubing here.
Heater Plate	Warms the water in the water tank.
Humidifier Door	Open the door to access the water tank.
Humidifier Door Lever	Lift up on the lever to open the humidifier door.
Water Tank	The removable water tank holds the water for humidification.
Maximum Fill Lines	The fill lines indicates the maximum water level for safe operation. (Found on front and both sides of tank)
Flexible Heated Tubing	The heated tube connects from the humidifier to the patient's mask.
Humidifier Connector End	Connect this end of the tubing to the humidifier.

Note: Read all instructions before using the humidifier.

Questions? Contact FDA/CDRH/OCE/DID at CDRH-FOISTATUS@fda.hhs.gov or call 301-796-8118.

Records processed under FOIA Request #2015-1305; Released by CDRH on 05-11-2016.

Connecting the Therapy Device

1. When using a humidifier, the patient circuit attaches to the air outlet port on the humidifier.
2. To connect the therapy device to the humidifier, first you must remove the side cover on the therapy device. Press in the tab on the side cover and pull the cover away from the unit.

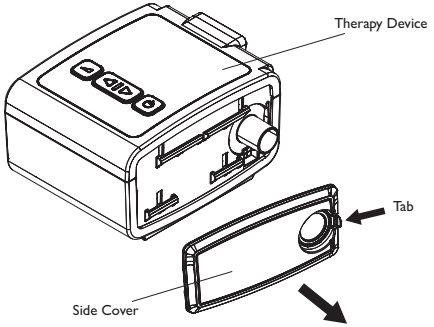

3. Next, line up the components side by side. Make sure that the guides on the humidifier fit into the slots on the therapy device and the air outlet port on the therapy device fits into the air inlet port on the humidifier.

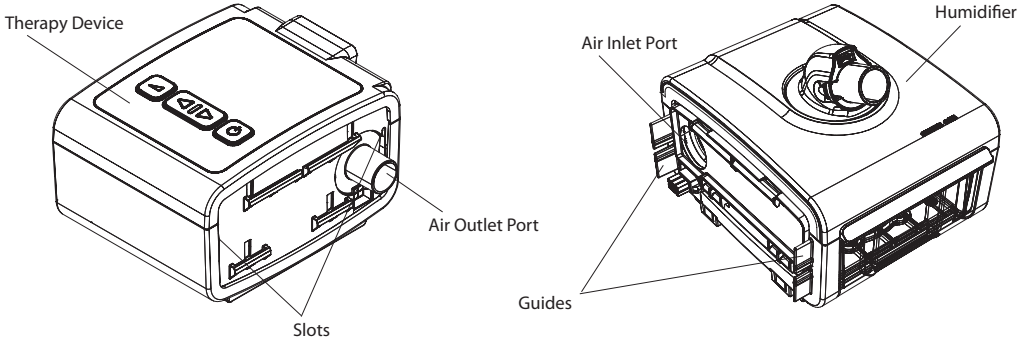

4. Simply press the two units together until they snap into place. Make sure that the therapy device and the humidifier are completely seated against each other.

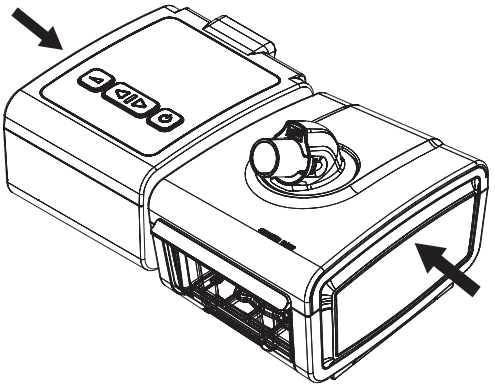

Questions? Contact FDA/CDRH/OCE/DID at CDRH-FOISTATUS@fda.hhs.gov or call 301-796-8118.

Records processed under FOIA Request #2015-1305; Released by CDRH on 05-11-2016.

Connecting the Heated Tubing

1. To attach the heated tubing to the humidifier, line up the humidifier connector end of the tubing with the air outlet port on the humidifier. Make sure the 3 pin connector at the top of the tube lines up with the opening at the top of the air outlet port. Press the tubing into place over the air outlet port until the tabs on the side of the tube click into place in the slots on the side of the outlet port.

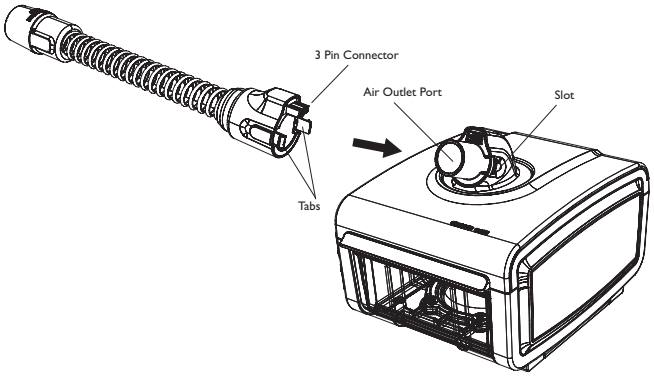

Note: Non-heated Respironics tubing (15 or 22 mm) can still be used with this humidifier. Simply connect the tubing to the air outlet port. Refer to the therapy device manual for setup instructions.

Disconnecting the Heated Tubing

1. To remove the heated tubing, press in the tabs on the side of the tubing connector and pull the tubing away from the outlet port.

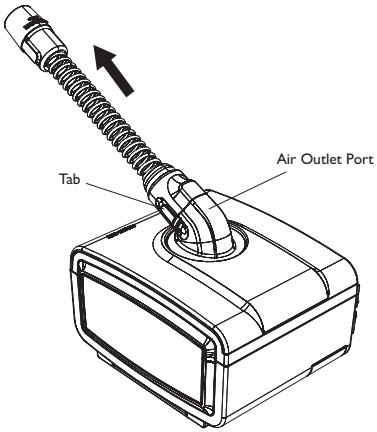

Questions? Contact FDA/CDRH/OCE/DID at CDRH-FOISTATUS@fda.hhs.gov or call 301-796-8118.

Records processed under FOIA Request #2015-1305; Released by CDRH on 05-11-2016.

Disconnecting the Therapy Device

CAUTION: To avoid spilling, do not disconnect the humidifier from the therapy device with water in the tank. Remove the water tank from the humidifier before disconnecting the therapy device.

1. Grasp the release latch on the bottom of the humidifier.
2. While holding both the therapy device and the humidifier, pull the release latch and pull the two units apart.

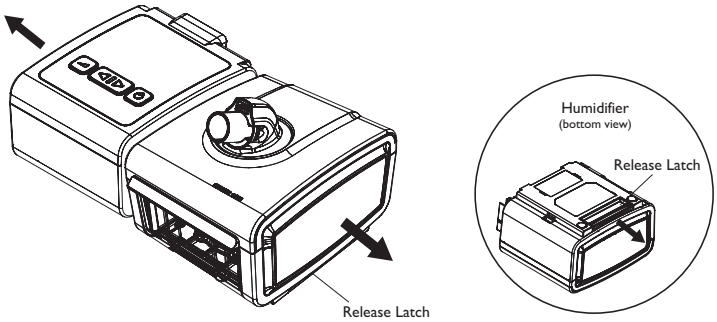

3. If you will be using the therapy device without the humidifier, reattach the side cover to the therapy device.

Daily Use

1. Place the connected therapy device with humidifier on a firm, flat surface lower than your sleeping position.
   WARNING: The humidifier must always be positioned below the breathing circuit connection at the mask and the air outlet on the device. The humidifier must be level for proper operation.
   CAUTION: Do not place the humidifier directly onto carpet, fabric, or other flammable materials.
   CAUTION: Do not place the device in or on any container that can collect or hold water. Take precautions to protect furniture from water damage.
   CAUTION: Do not turn the humidifier on without the water tank installed. The Humidifier number setting must remain on 0 if there is no water in the water tank.
   CAUTION: Do not attempt to fill the tank while it is still inside the humidifier.
   WARNING: Allow the humidifier heater plate and water to cool down for approximately 15 minutes before removing the water tank. A burn may result from: touching the heater plate, coming in contact with the heated water, or touching the tank pan.
2. Lift up on the release lever to open the humidifier door until it locks in an open position. You will hear a "click" once the door is opened far enough to remain in an open position. Remove the water tank by grasping the front of the tank and sliding it out of the humidifier base.
   CAUTION: The humidifier door must be set in the open position before removing the water tank. Do not remove the water tank without making sure that the humidifier door locks into the open position.

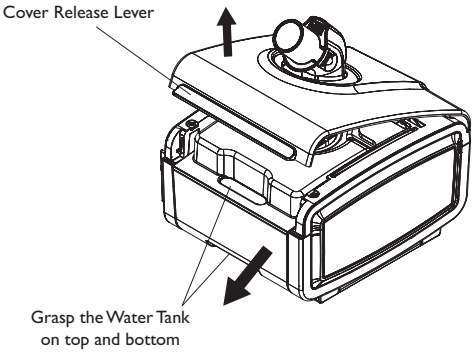

Questions? Contact FDA/CDRH/OCE/DID at CDRH-FOISTATUS@fda.hhs.gov or call 301-796-8118.

Records processed under FOIA Request #2015-1305; Released by CDRH on 05-11-2016.

3. Press the tab in the hole on top of the tank in toward the front of the tank. Gently remove the tank lid from the tank base and set aside. Empty any remaining water from the base of the tank.

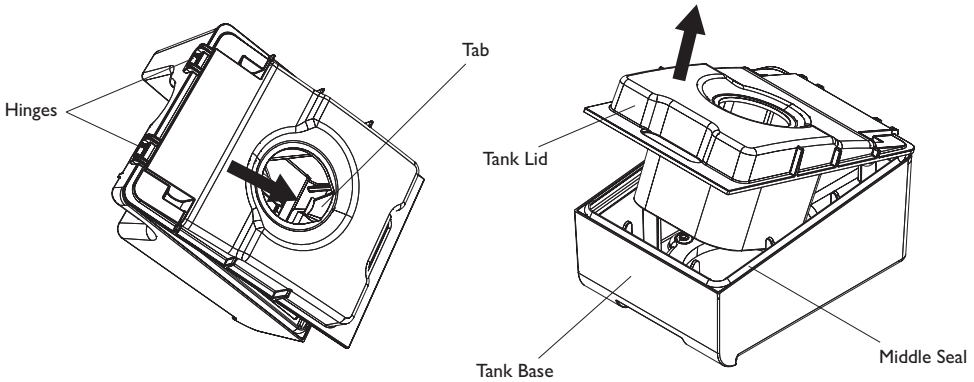

4. Rinse the tank with water. With the water tank sitting on a flat surface, fill it with distilled water (approximately 325 ml) no higher than the maximum fill line located on the front and both sides of the tank.

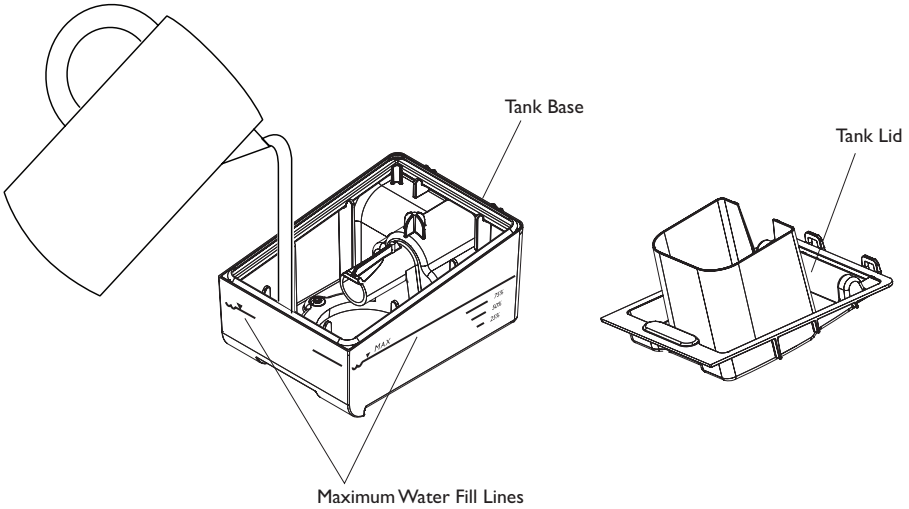

Note: Clean the water tank before first use. Refer to the "Cleaning Instructions" section in this manual.
CAUTION: Use only room temperature distilled water in the tank. Do not put any chemicals or additives into the water. Possible airway irritation or damage to the water tank may result.
CAUTION: Do not fill the water tank above the maximum fill line. Damage to the humidifier or therapy device may occur. If the water tank is overfilled, water may leak out of the tank inlet (located on the back of the tank) when installing the tank lid.

Questions? Contact FDA/CDRH/OCE/DID at CDRH-FOISTATUS@fda.hhs.gov or call 301-796-8118.

Records processed under FOIA Request #2015-1305; Released by CDRH on 05-11-2016.

5. Reassemble the tank by placing the hinges on the tank lid over the 2 tabs on the back of the tank base. Close the lid until the tab on the lid snaps back under the lip in the tank base. Inspect the tank. When it is closed correctly, the lid should be seated completely on the middle seal and it should sit snugly on the tank base so the tab can easily snap back in place.

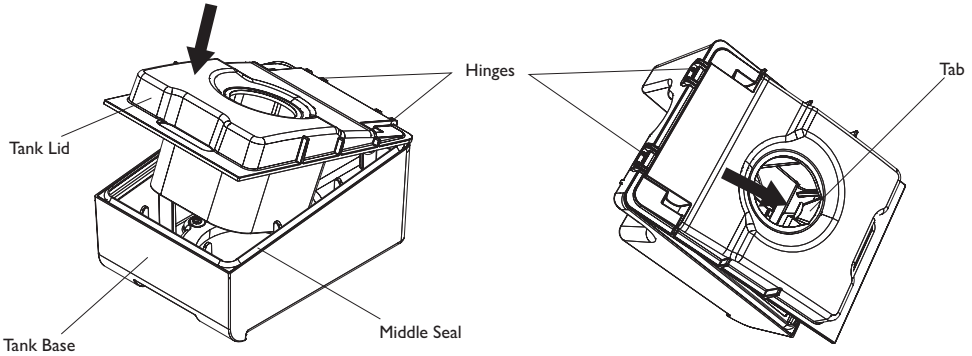

Note: If the lid does not close easily onto the base, separate the two parts, reassemble the tank, and inspect it again.
CAUTION: Do not fill the water tank above the maximum fill line. Damage to the humidifier or therapy device may occur. If the water tank is overfilled, water may leak out of the tank inlet (located on the back of the tank) when installing the tank lid.

6. Slide the water tank back into the humidifier.
WARNING: When installing the tank, do not allow any water to spill into the humidifier or therapy device.
CAUTION: Do not move the humidifier while the water tank has water in it.

7. Plug the power supply cord into the back of the therapy device.

8. Plug the AC power cord into the power supply provided with your therapy device, and then plug the AC power cord into an electrical outlet that is not controlled by a wall switch.
IMPORTANT: You must use the 80W power supply when using the heated tube humidifier with your therapy device. The appropriate power supply can be identified by the **80W** symbol.

9. Attach the flexible tubing from the patient circuit to the humidifier's air outlet port. (Refer to "Connecting the Heated Tubing" section of this manual.)
IMPORTANT: Before each use, examine the flexible tubing for any kinks, damage, or debris. If necessary, clean the tubing to remove the debris. Replace any damaged tubing.

10. The Home screen will appear on the therapy device.
Note: For more information on your therapy device settings, refer to the manual included with your therapy device.

11. Turn on the airflow on your device and begin therapy.
Note: For complete instructions on how to turn on the airflow, refer to the manual included with your therapy device.

12. Put on your mask assembly when the air starts to flow.
Note: If you are having trouble with your mask, refer to the instructions included with the mask.

13. Refer to your therapy device manual for complete instructions on how to adjust both the Heated Humidifier and the Heated Tubing settings to achieve the desired humidity.

CAUTION: Do not turn the humidifier on without the water tank installed. The Humidifier number setting must remain on "0" if there is no water in the water tank.

14. Refer to the manual included with your therapy device for instructions to turn off therapy.

Questions? Contact FDA/CDRH/OCE/DID at CDRH-FOISTATUS@fda.hhs.gov or call 301-796-8118.

Records processed under FOIA Request #2015-1305; Released by CDRH on 05-11-2016.

Cleaning Instructions: Water Tank

Hand washing can be performed daily. Dishwashing can be performed once a week.

1. Turn the humidifier setting to 0, turn the therapy device off, and allow the heater plate and water to cool.

   WARNING: Allow the humidifier heater plate and water to cool down for approximately 15 minutes before removing the water tank. A burn may result from: touching the heater plate, coming in contact with the heated water, or touching the tank pan.
2. Open the humidifier door with the release lever, and then slide the water tank out of the humidifier base.
3. Press the tab in the hole on top of the tank in toward the front of the tank. Gently remove the tank lid from the tank base. Empty any remaining water from the base of the tank.
4. Wash the parts of the tank in the dishwasher (top shelf only) or in a solution of warm water and a mild liquid dishwashing detergent. Gently wash the middle seal. Rinse the parts with clean water. Wipe the parts completely on the top and bottom. Allow them to air dry.

   CAUTION: Use a mild liquid dishwashing detergent only for either hand washing or when using a dishwasher.

   WARNING: Empty and clean the water tank daily to prevent mold and bacteria growth. Wipe the seal completely.
5. Inspect the tank and seal for damage.

   Note: Never use the water tank if the tank lid does not fit comfortably on the tank base.
6. Before using the tank, fill it with distilled water (per the directions in the Daily Use section) no higher than the maximum fill line located on the front and sides of the tank.
7. Reassemble the tank by placing the hinges on the tank lid over the 2 tabs on the back of the tank base. Close the lid until the tab on the lid snaps back under the lip in the tank base. Inspect the tank. When it is closed correctly, the lid should be seated completely on the middle seal and it should sit snugly on the tank base so the tab can easily snap back in place. Inspect the water tank for any leaks or damage. If the water tank shows signs of wear or damage, contact your home care provider for a replacement.

   Note: If the lid does not close easily onto the base, separate the two parts, reassemble the tank, and inspect it again.

Cleaning Instructions: Humidifier Base

WARNING: Allow the humidifier heater plate and water to cool down for approximately 15 minutes before removing the water tank. A burn may result from: touching the heater plate, coming in contact with the heated water, or touching the tank pan.

WARNING: Before cleaning the humidifier, always remove from the therapy device.

1. Clean the humidifier base and heater plate by wiping it with a damp cloth. Allow the platform to air dry before reconnecting to the therapy device.
2. Inspect the humidifier base for any damage and replace it if necessary.
3. Clean the humidifier outlet port by using a damp bottle brush or a damp cloth. Insert the brush or cloth approximately 7 cm (2.75 inches) into the outlet opening while cleaning.

Cleaning Instructions: Heated Tubing

Clean the heated tubing before first use and weekly. Heated Tubing is single patient multi-use.

1. Disconnect the heated tubing from the heated humidifier. Refer to the “Disconnecting the Heated Tubing” section earlier in this document.
2. Gently wash the heated tubing in a solution of warm water and a mild detergent. Be careful not to get the connector end of the tubing wet.

   CAUTION: Do not submerge the Humidifier Connector End of the heated tubing in water.
3. Rinse thoroughly and allow to air dry. Make sure the tubing is dry before use.
4. Inspect the heated tubing for damage or wear (cracking, crazing, tears, punctures, etc.). Discard and replace if necessary.

Questions? Contact FDA/CDRH/OCE/DID at CDRH-FOISTATUS@fda.hhs.gov or call 301-796-8118.

Records processed under FOIA Request #2015-1305; Released by CDRH on 05-11-2016.

Hospital and Institution Disinfection: Water Tank

CAUTION: Only the hospital and institution cleaning and disinfection procedures listed in this manual are recommended by Respironics. Use of other cleaning and disinfecting processes, not specified by Respironics, may affect the performance of the product.

Cleaning Prior to Disinfection

Clean and disinfect the humidifier's water tank using the procedures below.

1. Disassemble the tank by separating the tank lid and tank base.
2. While soaking the tank pieces in mild liquid dish detergent, use a soft bristle brush to clean each piece. Pay close attention to all corners and crevices.
3. Rinse each piece with water twice. Be sure to agitate it vigorously in water when rinsing and allow to air dry, but not in direct sunlight.

Disinfection

The following processes can be used to disinfect the water tank for a maximum of 60 cycles:

- Thermal Disinfection: Immersion in a (tap) water bath at 75° C ± 2° C for 30 minutes
- Control III
- Cidex

Following disinfection, visually inspect each piece. Discard and replace any damaged parts.

Service

The humidifier does not require routine servicing. If any part of the humidifier is worn or damaged, contact Respironics or your home care provider. See the Troubleshooting section later in the manual for additional information.

Traveling with the System

Packing the System

1. Remove the water tank and empty all water.
2. Put the empty water tank back into the device.
3. Pack your humidifier in your carry-on luggage.

CAUTION: Do not move the humidifier while the water tank has water in it.

When you are traveling, the optional carrying case for your therapy device can be used for carry-on luggage only. The carrying case will not protect the humidifier if it is put through checked baggage.

For your convenience at airport security stations, there is a note on the bottom of the humidifier stating that it is medical equipment. It may be helpful to bring this manual along with you to help security personnel understand the device.

If you are traveling to a country with a line voltage different than the one you are currently using with the therapy device, a different power cord or an international plug adapter may be required to make your power cord compatible with those where you visit. Contact your home care provider for additional information.

Questions? Contact FDA/CDRH/OCE/DID at CDRH-FOISTATUS@fda.hhs.gov or call 301-796-8118.

Records processed under FOIA Request #2015-1305; Released by CDRH on 05-11-2016.

Troubleshooting

The table below lists some of the problems you may experience with your humidifier and possible solutions.

Problem	Why it Happened	What to Do
Nothing happens when you apply power to the humidifier.	Loss of AC/DC power or the device is unplugged.	Verify that the humidifier and therapy device are properly plugged in. Make sure the AC power cord is connected correctly to the power supply and the power supply cord is correctly plugged into the wall. If the problem continues to occur, contact your home care provider. Return the humidifier, therapy device, and power supply to your provider to determine if the problem is with the therapy device, humidifier, or power supply.
High Leak	The tubing is not connected correctly and doesn't seal properly.	Remove your mask and tubing and check for kinks or tears. If it is torn or damaged, contact your home care provider or Respironics for replacement tubing and/or mask. If the tubing is not damaged, reattach your tubing, turn on the airflow, and check to make sure you do not still feel air coming out of the port area.
	The therapy device is not seated correctly against the humidifier.	Remove the therapy device from the humidifier and reconnect. Make sure the air inlet port on the humidifier connects securely to the air outlet port on the device. If high leak persists, issue may be caused by a misaligned or damaged seal. Seals are not user-serviceable components. Please contact your home care provider or Respironics.
	The humidifier tank is not properly seated in the humidifier.	Remove the water tank from the humidifier base, and then slide the tank back in the humidifier, making sure it is pushed back as far as it can go. If high leak persists, issue may be caused by a misaligned or damaged seal. Seals are not user-serviceable components. Please contact your home care provider or Respironics.
The humidifier LED icon on the therapy device is flashing.	There is no communication between the therapy device and the humidifier.	Following the Daily Use section earlier in this manual, check the outlet power and verify that the humidifier and therapy device are properly plugged in. Make sure the AC power cord is connected correctly to the therapy device's power supply. Make sure the AC power cord is correctly plugged into the wall. If the problem continues to occur, contact your home care provider. Return the humidifier, therapy device, and power supply to your provider, to determine if the problem is with the therapy device, humidifier, or power supply.
	The therapy device is not seated properly against the humidifier.	Remove the therapy device from the humidifier and reconnect it. Make sure the air inlet port on the side of the humidifier connects securely to the air outlet port on the side of the device.
	The heater plate is not heating.	Check the power connections to the humidifier. If the problem continues, contact your home care provider or Respironics. **Note:** If the water is not heating, you can temporarily use the humidifier as an unheated pass-over humidifier.
The humidifier is cracked or damaged.	The humidifier was dropped or mishandled.	If the humidifier does not operate properly after being dropped or mishandled, contact your home care provider or Respironics.
The therapy device is operating but the humidifier's airflow is low or stopped.	The humidifier has an airflow obstruction.	Contact your home care provider. Return the humidifier and power supply to your provider to determine the problem.

Questions? Contact FDA/CDRH/OCE/DID at CDRH-FOISTATUS@fda.hhs.gov or call 301-796-8118.

Records processed under FOIA Request #2015-1305; Released by CDRH on 05-11-2016.

Problem	Why it Happened	What to Do
The water tank's middle seal is damaged.	The seal may become damaged during use.	Check the seal for any tears or other damage. If it is damaged, contact your home care provider.
Excessive condensation in the tubing.	The humidity level setting is too high.	Reduce the humidity level setting.
	The humidifier is positioned incorrectly.	Verify that the humidifier and therapy device are away from air conditioning equipment.
Heated tube is not warming.	Using the wrong power supply.	Make sure you use the correct 80W power supply. The correct power supply should have the **80W** symbol.
	Heated Tubing setting is set to zero.	Make sure the Heated Tubing setting is not set to zero. Refer to your therapy device's user manual for instructions.
The humidifier door has been accidentally removed from the humidifier.	Humidifier door was lifted past the locked open position.	The humidifier door can be easily reattached. With the water tank removed, align the hinge side of the door with the back of the humidifier in a fully open position (see figure below). Make sure the hinges are aligned with the grooves of the humidifier. Rotate the door closed. You will need to apply pressure until the door snaps past the locked open position. Verify that the door is working properly. 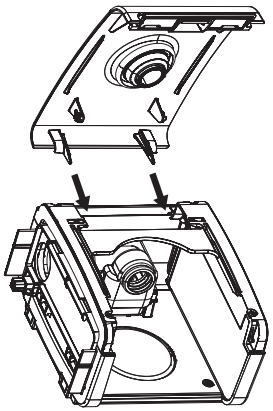 If further assistance is needed, contact your home care provider.
The humidifier has fallen off your table or night stand.	The humidifier may not have been properly seated on the night stand, or the placement of the tubing may have caused the device to fall.	Always make sure your humidifier is placed on a hard, flat surface so the rubber feet on the bottom of the humidifier base can adhere to the surface (make sure there is no fabric under the base). The humidifier must be level for proper operation. Also, place the humidifier away from the edge of the night stand or table, so it doesn't accidentally get knocked off the table. If the humidifier falls and water gets into the therapy device, drain all water out of the therapy device. Allow it to air dry to make sure it is completely dry before reapplying power. If the placement of the tubing causes the humidifier to fall, make sure that you use proper hose management when setting up your device. Route the tubing behind the bed's headboard. If the humidifier does not operate correctly after falling, contact your home care provider or Respironics.

Note: For information on troubleshooting your therapy device, see the manual included with your therapy device.

Questions? Contact FDA/CDRH/OCE/DID at CDRH-FOISTATUS@fda.hhs.gov or call 301-796-8118.

Records processed under FOIA Request #2015-1305; Released by CDRH on 05-11-2016.

System One Heated Humidifier Specifications

Environmental

Operating Temperature: 5° to 35° C (41° to 95° F)

Storage Temperature: -20° to 60° C (-4° to 140° F)

Relative Humidity (operating & storage): 15 to 95% (non-condensing)

Atmospheric Pressure: 77 to 101 kPa (0 - 2286 m / 0 - 7500 ft)

Physical

Dimensions: 18 x 14 x 10 cm (7" L x 5.5" W x 4" H)

Weight: Approximately 0.89 kg (1.95 lbs.)

Water Capacity

325 ml (11 oz.) at recommended water level

Electrical (When the heated humidifier is used with a Respironics therapy device)

AC Power Consumption: 100 – 240 VAC, 50/60 Hz, 2.1 A

DC Power Consumption: 12 VDC, 6.67 A

Type of Protection Against Electric Shock: Class II Equipment

Degree of Protection Against Electric Shock: Type BF Applied Part

Degree of Protection against Ingress of Water: Drip Proof, IPX1

Mode of Operation: Continuous

Heater Plate

Max Temperature: 75° C (167° F)

Pressure Drop with Humidifier

Max.: 0.3 cm H_2O at 60 LPM flow

Humidity

$Humidity_{min}$ Output: 10 mg H_2O/L

Measured @ max flow, 35° C, 15% RH.

Questions? Contact FDA/CDRH/OCE/DID at CDRH-FOISTATUS@fda.hhs.gov or call 301-796-8118.

Records processed under FOIA Request #2015-1305; Released by CDRH on 05-11-2016.

Heated Tubing Specifications

Maximum Recommended Pressure

20 cm H_2O

Inner Diameter

0.6 in. (15 mm)

Length

6 ft. (1.83 m)

Heated Tubing Temperature Range

71° to 89° F (22° to 32° C)

Heated Tubing Temperature Cut-out

≤ 106° F (≤ 41° C)

Material

Flexible plastic and electrical components

Electrical

Heated tubing is powered by the attached Heated Humidifier
(Refer to "Electrical" section of System One Heated Humidifier Specifications)

Environmental

Refer to "Environmental" section of System One Heated Humidifier Specifications

Questions? Contact FDA/CDRH/OCE/DID at CDRH-FOISTATUS@fda.hhs.gov or call 301-796-8118.

Records processed under FOIA Request #2015-1305; Released by CDRH on 05-11-2016.

Disposal

Dispose of this device in accordance with local regulations.

How to Contact Respironics

To have your device serviced, contact your home care provider. If you need to contact Respironics directly, call the Respironics Customer Service department at 1-800-345-6443 or 1-724-387-4000. You can also use the following address:

Respironics, Inc.
1001 Murry Ridge Lane
Murrysville, PA 15668

Questions? Contact FDA/CDRH/OCE/DID at CDRH-FOISTATUS@fda.hhs.gov or call 301-796-8118.

Records processed under FOIA Request #2015-1305; Released by CDRH on 05-11-2016.

Limited Warranty

Respironics, Inc. warrants that the system shall be free from defects of workmanship and materials and will perform in accordance with the product specifications for a period of two (2) years from the date of sale by Respironics, Inc. to the dealer. If the product fails to perform in accordance with the product specifications, Respironics, Inc. will repair or replace – at its option – the defective material or part. Respironics, Inc. will pay customary freight charges from Respironics, Inc. to the dealer location only. This warranty does not cover damage caused by accident, misuse, abuse, alteration, water ingress, and other defects not related to material or workmanship. The Respironics, Inc. Service department shall examine any devices returned for service, and Respironics, Inc. reserves the right to charge an evaluation fee for any returned device as to which no problem is found after investigation by Respironics, Inc. Service.

This warranty is non-transferable by unauthorized distributors of Respironics, Inc. products and reserves the right to charge dealers for warranty service of failed product not purchased directly from Respironics, Inc. or authorized distributors.

Respironics, Inc. disclaims all liability for economic loss, loss of profits, overhead, or consequential damages which may be claimed to arise from any sale or use of this product. Some states do not allow the exclusion or limitation of incidental or consequential damages, so the above limitation or exclusion may not apply to you.

This warranty is given in lieu of all other express warranties. In addition, any implied warranties – including any warranty of merchantability or fitness for the particular purpose – are limited to two years. Some states do not allow limitations on how long an implied warranty lasts, so the above limitation may not apply to you. This warranty gives you specific legal rights, and you may also have other rights which vary from state to state.

To exercise your rights under this warranty, contact your local authorized Respironics, Inc. dealer or contact Respironics, Inc. at:

1001 Murry Ridge Lane

Murrysville, Pennsylvania 15668-8550

1-724-387-4000

Questions? Contact FDA/CDRH/OCE/DID at CDRH-FOISTATUS@fda.hhs.gov or call 301-796-8118.

Records processed under FOIA Request #2015-1305; Released by CDRH on 05-11-2016.

REF **10xxxxx**

Respironics Inc.
1001 Murry Ridge Lane
Murrysville, PA 15668 USA

10xxxxx R00
EN-DOM

Questions? Contact FDA/CDRH/OCE/DID at CDRH-FOISTATUS@fda.hhs.gov or call 301-796-8118.

Records processed under FOIA Request #2015-1305; Released by CDRH on 05-11-2016.

System One Heated Humidifier Warning Label

(Please turn the page)

© 2013 Koninklijke Philips Electronics N.V. All Rights Reserved
Questions? Contact FDA/CDRH/OCE/DID at CDRH-FOISTATUS@fda.hhs.gov or call 301-796-8118.

Records processed under FOIA Request #2015-1305; Released by CDRH on 05-11-2016.

Questions? Contact FDA/CDRH/OCE/DID at CDRH-FOISTATUS@fda.hhs.gov or call 301-796-8118.

Records processed under FOIA Request #2015-1305; Released by CDRH on 05-11-2016.

Tab 2

Statement of Indications for Use

(Please turn the page)

© 2013 Koninklijke Philips Electronics N.V. All Rights Reserved
Questions? Contact FDA/CDRH/OCE/DID at CDRH-FOISTATUS@fda.hhs.gov or call 301-796-8118.

Records processed under FOIA Request #2015-1305; Released by CDRH on 05-11-2016.

510(k) Number (if known): _____

Device Name: REMstar SE

Indications for Use:

The REMstar SE delivers positive airway pressure therapy for the treatment of Obstructive Sleep Apnea in spontaneously breathing patients weighing over 30kg (66 lbs). It is for use in the home or hospital/institutional environment.

Prescription Use ___✓___ **(Part 21 CFR 801 Subpart D)**	**AND/OR**	**Over-The-Counter Use _____** **(Part 21 CFR 801 Subpart C)**

(PLEASE DO NOT WRITE BELOW THIS LINE – CONTINUE ON ANOTHER PAGE IF NEEDED)

Concurrence of CDRH, Office of Device Evaluation (ODE)

Questions? Contact FDA/CDRH/OCE/DID at CDRH-FOISTATUS@fda.hhs.gov or call 301-796-8118.

Records processed under FOIA Request #2015-1305; Released by CDRH on 05-11-2016.

Tab 3

FDA Reviewer's Guidance Device Description Checklist

In accordance with the FDA Reviewer's Guidance for Premarket Notification Submissions (November 1993), the following characteristics are identified:

a) **Is the device life-supporting or life-sustaining?**
No. The REMstar SE is not intended for life support or life sustaining applications.

b) **Is the device an implant (short-term or long-term)?**
No. The REMstar SE is not an implantable device.

c) **Is the device sterile?**
No. The REMstar SE is not sold as sterile.

d) **Is the device for single use?**
No. The REMstar SE is not a single-patient-use device.

e) **Is the device for prescription use?**
Yes. The REMstar SE must be prescribed by a physician.

f) **Is the device for use in hospital, home, or mobile environments?**
The REMstar SE is for use in the home or hospital/institutional environment.

g) **Does the device contain a drug or biological product as a component?**
No. The REMstar SE does not contain a drug or biological as a component.

h) **Is this device a kit?**
No. The REMstar SE is not a kit.

i) **Is the device Software-driven?**
Yes. The REMstar SE is software driven.

j) **Is the device electrically operated?**
Yes. The REMstar SE is electrically operated.

k) **Are there applicable voluntary standards for this device to which conformance has been demonstrated?**
Yes.

All items addressed by the Reviewer's Checklist are unchanged from the predicate REMstar SE (K122769).

© 2013 Koninklijke Philips Electronics N.V. All Rights Reserved
Questions? Contact FDA/CDRH/OCE/DID at CDRH-FOISTATUS@fda.hhs.gov or call 301-796-8118.

Records processed under FOIA Request #2015-1305; Released by CDRH on 05-11-2016.

Tab 4

Declaration of Conformity with Design Controls

(Please turn the page)

© 2013 Koninklijke Philips Electronics N.V. All Rights Reserved
Questions? Contact FDA/CDRH/OCE/DID at CDRH-FOISTATUS@fda.hhs.gov or call 301-796-8118.

Records processed under FOIA Request #2015-1305; Released by CDRH on 05-11-2016

Declaration of Conformity with Design Controls

Verification Activities

The verification and validation activities for the modification to the subject device, as required by the risk analysis, were performed by the designated individual(s) and the results demonstrated that the predetermined acceptance criteria were met.

(b) (6)
[redacted]

01/11/2013
(Date)

Manufacturing Facility

The manufacturing facility, Respironics, Inc., New Kensington, PA, is in conformance with the design control requirements as specified in 21 CFR 820.30 and the associated records are available for review.

(b) (6)
[redacted]

01/11/2013
(Date)

© 2013 Koninklijke Philips Electronics N.V. All Rights Reserved
Questions? Contact FDA/CDRH/OCE/DID at CDRH-FOISTATUS@fda.hhs.gov or call 301-796-8118.

Records processed under FOIA Request #2015-1305; Released by CDRH on 05-11-2016.

Tab 5

510(K) Summary of Safety & Effectiveness

Official Contact	Frank Kadi Senior Regulatory Affairs Engineer Respironics, Inc. 1740 Golden Mile Highway Monroeville, PA 15146
Date Prepared	11 January 2013
Trade Name	REMstar SE
Common Name	CPAP System
Classification Name	ventilator, non-continuous (respirator) (21 CFR 868.5905, Product Code BZD)
Predicate Device	Respironics REMstar SE (K122769)
Reason for Submission	The modified device is the result of a material modification made to the REMstar SE (K122769). The goal of this modification is to change the aesthetics of the device.

© 2013 Koninklijke Philips Electronics N.V. All Rights Reserved
Questions? Contact FDA/CDRH/OCE/DID at CDRH-FOISTATUS@fda.hhs.gov or call 301-796-8118.

Records processed under FOIA Request #2015-1305; Released by CDRH on 05-11-2016.

Substantial Equivalence

The modified device has the following similarities to the previously cleared predicate devices:

- Same intended use
- Same operating principle
- Same technology
- Same manufacturing process

Design verification tests were performed on the REMstar SE as a result of the risk analysis and product requirements. All tests were verified to meet the required acceptance criteria. Respironics has determined that the material modification has no impact on the safety and effectiveness of the device. In summary, the device described in this submission is substantially equivalent to the predicate device.

The modified device complies with the requirements of the following FDA Guidance Documents:

- FDA Reviewers Guidance for Premarket Notification Submissions (November 1993)
- FDA Reviewers Guidance for the Content of Premarket Submissions for Software Contained in Medical Devices (May 11, 2005)

Intended Use

The REMstar SE delivers positive airway pressure therapy for the treatment of Obstructive Sleep Apnea in spontaneously breathing patients weighing over 30kg (66 lbs). It is for use in the home or hospital/institutional environment.

Device Description

The REMstar SE is a microprocessor controlled blower based positive pressure system which is comprised of the therapy device, a heated humidifier and patient tubing (15mm, 22mm, or heated tubing).

The REMstar SE includes a CPAP mode only. While in CPAP mode, the device delivers a continuous positive airway pressure throughout the entire therapy session.

In addition to the CPAP therapy mode, the REMstar SE incorporates several optional features to aid with patient comfort. These features include ramp, adjustable pressure relief (FLEX technologies), and humidification. Humidification options include both a heated humidifier and heated tubing. The heated humidifier adjusts the level of humidification by varying the temperature of a heated plate used to heat up a chamber of water. Optional heated tubing can then be used to maintain that air at a desired temperature until it reaches the patient's mask.

The REMstar SE is intended for use with a patient circuit that connects the device to a patient interface device (mask). A typical patient circuit consists of patient tubing (15mm, 22mm, or heated tubing) and

© 2013 Koninklijke Philips Electronics N.V. All Rights Reserved
Questions? Contact FDA/CDRH/OCE/DID at CDRH-FOISTATUS@fda.hhs.gov or call 301-796-8118.

Records processed under FOIA Request #2015-1305; Released by CDRH on 05-11-2016.

an exhalation device (if one is not present in the mask). When a heated humidifier is attached to the therapy device, the patient circuit connects to the air outlet port of the heated humidifier.

Non-Clinical Tests

Verification activities performed to verify that the device modification did not affect the safety and effectiveness of the subject device included the following:

Material Evaluation

New materials used in the air flow path of the device have been verified to meet the requirements of ISO 10993-1 (Biological evaluation of medical devices -- Part 1: Evaluation and testing within a risk management process). In addition, the new materials have been subjected to multiple cycles of both disinfection and general cleaning in accordance with product labeling.

Clinical Tests

Clinical tests were not required to demonstrate the safety and effectiveness of the REMstar SE. Product functionality has been adequately assessed by non-clinical tests.

Conclusion

The REMstar SE has passed all of the aforementioned non-clinical tests and required no clinical tests in order to demonstrate safety or effectiveness. It is therefore concluded that the REMstar SE is substantially equivalent to the predicate device in terms of safety and effectiveness.

© 2013 Koninklijke Philips Electronics N.V. All Rights Reserved
Questions? Contact FDA/CDRH/OCE/DID at CDRH-FOISTATUS@fda.hhs.gov or call 301-796-8118.

Records processed under FOIA Request #2015-1305; Released by CDRH on 05-11-2016.

Tab 6

Premarket Notification Truthful and Accurate Statement

(Please turn the page)

© 2013 Koninklijke Philips Electronics N.V. All Rights Reserved
Questions? Contact FDA/CDRH/OCE/DID at CDRH-FOISTATUS@fda.hhs.gov or call 301-796-8118.

Records processed under FOIA Request #2015-1305; Released by CDRH on 05-11-2016.

Premarket Notification Truthful and Accurate Statement

[As Required by 21 CFR 807.87(k)]

I certify that, in my capacity as Regulatory Affairs Senior Manager of Respironics Inc., I believe to the best of my knowledge, that all data and information submitted in the premarket notification are truthful and accurate and that no material fact has been omitted.

(b) (6)

[redacted]

01/11/2013

(Date)

***(Premarket Notification [510(k)] Number)**

*For a new submission, leave the 510(k) number blank.

Must be signed by a responsible person of the firm required to submit the premarket notification [e.g., not a consultant for the 510(k) submitter].

Questions? Contact FDA/CDRH/OCE/DID at CDRH-FOISTATUS@fda.hhs.gov or call 301-796-8118.

Records processed under FOIA Request #2015-1305; Released by CDRH on 05-11-2016.

Tab 7

Level of Concern

Commensurate with the guidance provided in the FDA Guidance for the Content of Premarket Submissions for Software Contained in Medical Devices, May 2005, level of concern statements for the modified REMstar SE is being provided.

Table 1 – Major Level of Concern	
1. Does the Software Device qualify as Blood Establishment Computer Software?	No
2. Is the Software Device intended to be used in combination with a drug or biologic?	No
3. Is the Software Device an accessory to a medical device that has a Major Level of Concern?	No
4. Prior to mitigation of Hazards, could a failure of the software device result in death or serious injury, either to patient or to a user of the device?	No
Table 2 Moderate Level of Concern	
1. Is the Software Device an accessory to a medical device that has a moderate level of concern?	No
2. Prior to mitigation of Hazards, could a failure of the software device result in minor injury, either to a patient or to a user of the device?	Yes
3. Could a malfunction of, or a latent design flaw in, the Software Device lead to an erroneous diagnosis or delay in deliver of appropriate medical care that could likely lead to minor injury?	No

The following statements provide a justification for these answers:

MAJOR LEVEL OF CONCERN

1. **Does the Software Device qualify as Blood Establishment Computer Software?**
   No, the REMstar SE does not perform any blood establishment computer functions.

2. **Is the Software Device intended to be used in combination with a drug or biologic?**
   No, the REMstar SE is not used as a combination product.

3. **Is the Software Device an accessory to a medical device that has a Major Level of Concern?**
   No, the REMstar SE is not a life support or life sustaining device; nor is it considered to be an accessory to a medical device that has a Major Level of Concern.

4. **Prior to mitigation of Hazards, could a failure of the software device result in death or serious injury, either to patient or to a user of the device?**
   No. The REMstar SE does not have an unmitigated hazard that could result in death or serious injury to the patient or user which has software identified as a potential cause. Further, the patient

© 2013 Koninklijke Philips Electronics N.V. All Rights Reserved
Questions? Contact FDA/CDRH/OCE/DID at CDRH-FOISTATUS@fda.hhs.gov or call 301-796-8118.

Records processed under FOIA Request #2015-1305; Released by CDRH on 05-11-2016.

population intended to use the REMstar SE are spontaneously breathing OSA patients whose loss of therapy is not considered to be a clinical hazard.

MODERATE LEVEL OF CONCERN

1. **Is the Software Device an accessory to a medical device that has a moderate level of concern?**
   No. The REMstar SE is both the Software Device and medical device. It is not an accessory to a another medical device

2. **Prior to mitigation of Hazards, could a failure of the software device result in minor injury, either to a patient or to a user of the device?**
   Yes. Prior to mitigation, there are hazards that may result in minor to moderate injury to the patient. Appropriate countermeasures have been provided to reduce the probability of occurrence for these hazard types. Please refer to the risk assessment for the modifications discussed in Tab 8.

3. **Could a malfunction of, or a latent design flaw in, the Software Device lead to an erroneous diagnosis or delay in deliver of appropriate medical care that could likely lead to minor injury?**
   No. The REMstar SE is not a diagnostic device.

CONCLUSION

Based on the responses to these questions, the REMstar SE software (firmware) level of concern is determined as moderate in accordance with the guidance document. This conclusion is unchanged from K122769.

© 2013 Koninklijke Philips Electronics N.V. All Rights Reserved
Questions? Contact FDA/CDRH/OCE/DID at CDRH-FOISTATUS@fda.hhs.gov or call 301-796-8118.

Records processed under FOIA Request #2015-1305; Released by CDRH on 05-11-2016.

Documentation for Moderate Level of Concern

This section provides a summary of the documentation provided for a Moderate Level of Concern. This content is unchanged from the predicate REMstar SE (K122769).

Software Description

Provided in the Special 510(k) section of this submittal and the labeling in Tab 1

Device Hazard Analysis

The risk analysis associated with the material modification is provided in the Special 510(k) section of this submission. No software modifications were required as part of the implementation of that modification. All risks associated with software are unchanged from the predicate REMstar SE (K122769).

Software Development Process

The software development process is defined within Respironics Quality System Procedure QSP 7.3-277 Developing Software Systems which was generated in accordance with the guidance provided in:

- IEC 62304:2006 Medical Device Software – Software Lifecycle Processes
- FDA Reviewers Guidance for the Content of Premarket Submissions for Software Contained in Medical Devices (May 11, 2005)

The documentation created in support of this process is described below.

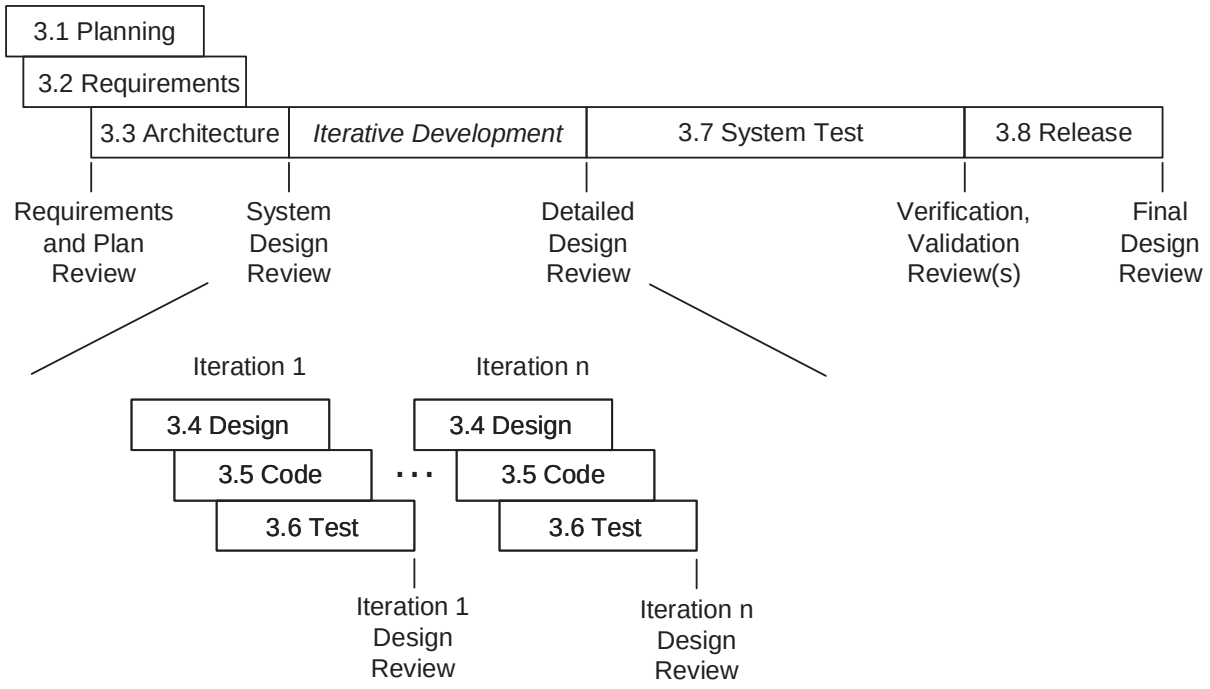

Figure 5 Software Process Activities

© 2013 Koninklijke Philips Electronics N.V. All Rights Reserved
Questions? Contact FDA/CDRH/OCE/DID at CDRH-FOISTATUS@fda.hhs.gov or call 301-796-8118.

Records processed under FOIA Request #2015-1305; Released by CDRH on 05-11-2016.

Planning

Software Development Plan (SDP)

A software development plan (SDP) is prepared which defines the project scope, software process, development environment, configuration management, iteration development plan, software quality assurance activities, coding standard information, maintenance plan, etc. The SDP is then used to drive all software development activities such as the creation of the Software Requirements Specification (SRS), Software Design Description (SDD), and Trace Matrices.

Prior to use, the SDP is placed under configuration management control, in the design history file, and is reviewed and approved by the Software Lead, Project Manager, Design V&V, and Design Quality Engineering.

Requirements

Software Requirements Specification (SRS)

In accordance with the processes defined in the Software Development Plan (SDP), the SRS documents specific requirements generated from higher level requirements defined by the Product Requirements Document (PRD). These specific requirements are used to establish the software design and V&V acceptance criteria. Included in the requirements are those that are identified in the risk assessment which are intended to implement risk control measures.

Prior to use, the SRS is placed under configuration management control, in the design history file, and is reviewed and approved by the Software Lead, Project Manager, and Design V&V.

Trace Matrix

A Trace Matrix is established to verify that the product requirements are adequately covered by the software requirements.

Architecture

Software Design Description (SDD)

In accordance with the process defined in the Software Development Plan (SDP), the SDD documents the software solutions that contain the software items that will interact, communicate, and execute the functionality to meet the software requirements defined in the SRS. This information establishes the software architecture which includes identification of the software items, internal and external interfaces, etc. Prior to use, the SDD is placed under configuration management control, in the design history file, and is reviewed and approved by the Software Lead, Project Manager, and Design V&V.

© 2013 Koninklijke Philips Electronics N.V. All Rights Reserved
Questions? Contact FDA/CDRH/OCE/DID at CDRH-FOISTATUS@fda.hhs.gov or call 301-796-8118.

Records processed under FOIA Request #2015-1305; Released by CDRH on 05-11-2016.

Iterative Development

Software is created in a series of iterations that are driven from Product specific milestones. The Project Manager defines and maintains these milestones in the Product Plan. The level of functionality and testing required for each iteration of software is documented in the SDP.

Software Build Procedure (SBP)

A software build procedure is developed which defines the source locations and items that comprise the software. It includes instructions for creating the executable software and any special instructions for distributing or controlling either the source or executable.

Formal Technical Reviews

When a software iteration is complete, the developer evaluates it for complexity and purpose, and institute a Formal Technical Review on the design, code and /or documentation. Depending on the complexity of the module, and with the agreement of the Software Lead, a formal technical may be bypassed. It should be noted that this is separate from Code Reviews which are required regardless of complexity.

System Test

Design Verification & Validation (V&V) Plan

A Design V&V Plan is established which documents the tasks and deliverables required for formal V&V of the software. Prior to use, the Design V&V Pan is placed under configuration management control, in the design history file, and is reviewed and approved by the V&V representative, Design Quality Engineering, and the project manager (or engineering representative).

Test Procedures

Design V&V develops software V&V procedures for use in V&V testing that fully covers and traces to an approved SRS. Test procedures, including all referenced test automations, test data, and scripts are approved prior to formal execution and placed under configuration control, in the design history file. They are approved by the author, Engineering representative and the V&V representative.

Code Reviews

Code reviews are held in line with expectations set by the SDP. The meeting minutes from these code reviews are documented as part of the design history file.

Test Execution and Records

© 2013 Koninklijke Philips Electronics N.V. All Rights Reserved
Questions? Contact FDA/CDRH/OCE/DID at CDRH-FOISTATUS@fda.hhs.gov or call 301-796-8118.

Records processed under FOIA Request #2015-1305; Released by CDRH on 05-11-2016.

Tests are executed and recorded as planned on controlled releases of item(s) under test, with approved, controlled test procedures. Test execution is documented and controlled to permit the test to be reproducible, and provide evidence support the pass/fail status. Test records are sign and dated by the person executing the test to certify the results are accurate.

Issue Tracking

Anomalies identified during testing are recorded in the Issue Tracking Database as defined by the SDP and *Issue Tracking Process*. At milestone reviews, the V&V Lead presents the status of V&V activities, including a list of any issues. The V&V Lead coordinates with the groups responsible to make sure that all are aware of the testing issues found, fixed, and unresolved. Prior to Final Design Review, the V&V Lead makes sure that appropriate reviews take places to ensure that all stakeholders (including Regulatory Affairs, Design Quality Engineering, and Marketing) agree that unresolved issues are addressed in accordance with the established *Issue Tracking Process*. This includes review of the effect that any unresolved issues could have on the safety or effectiveness of the device.

Release

Engineering creates the final software build following the established SBP and the following activities take place:

- All known issues and unresolved anomalies are documented in accordance with the SDP and *Issue Tracking Process*
- Source code for the final build is placed under configuration control in accordance with the SDP
- The master executable is created, identified by version number, and transferred to a controlled location in accordance with the SDP
- Release notes are generated and documented as part of the design history file

© 2013 Koninklijke Philips Electronics N.V. All Rights Reserved
Questions? Contact FDA/CDRH/OCE/DID at CDRH-FOISTATUS@fda.hhs.gov or call 301-796-8118.

Records processed under FOIA Request #2015-1305; Released by CDRH on 05-11-2016.

Tab 8

Standards Data Reports for 510(k)s

Standards Data Reports are provided in this section for the following referenced standards:

ISO 14971	Medical devices - Application of risk management to medical devices
ISO 10993-1	Biological evaluation of medical devices – Part 1: Evaluation and testing within a risk management process
ISO 10993-18	Biological evaluation of medical devices – Part 18: Chemical characterization of materials

Note: The standards listed above represent those which have been used to support the modifications described within this submission. Compliance with the additional standards referenced in the predicate submission (K122769) remains unchanged.

(Please turn the page)

© 2013 Koninklijke Philips Electronics N.V. All Rights Reserved
Questions? Contact FDA/CDRH/OCE/DID at CDRH-FOISTATUS@fda.hhs.gov or call 301-796-8118.

Records processed under FOIA Request #2015-1305; Released by CDRH on 05-19-2016; Expiration Date: 12/31/13

Department of Health and Human Services
Food and Drug Administration

STANDARDS DATA REPORT FOR 510(k)s

(To be filled in by applicant)

This report and the Summary Report Table are to be completed by the applicant when submitting a 510(k) that references a national or international standard. A separate report is required for each standard referenced in the 510(k).

TYPE OF 510(K) SUBMISSION

☐ Traditional ☒ Special ☐ Abbreviated

STANDARD TITLE [1]

ISO 14971 Medical devices - Application of risk management to medical devices 2007

Please answer the following questions	Yes	No
Is this standard recognized by FDA [2]?	☒	☐
FDA Recognition number [3]	#5-40	
Was a third party laboratory responsible for testing conformity of the device to this standard identified in the 510(k)?	☐	☒
Is a summary report [4] describing the extent of conformance of the standard used included in the 510(k)? If no, complete a summary report table.	☐	☒
Does the test data for this device demonstrate conformity to the requirements of this standard as it pertains to this device?	☒	☐
Does this standard include acceptance criteria? If no, include the results of testing in the 510(k).	☒	☐
Does this standard include more than one option or selection of tests? If yes, report options selected in the summary report table.	☐	☒
Were there any deviations or adaptations made in the use of the standard?	☐	☒
If yes, were deviations in accordance with the FDA supplemental information sheet (SIS) [5]?	☐	☐
Were deviations or adaptations made beyond what is specified in the FDA SIS? If yes, report these deviations or adaptations in the summary report table.	☐	☒
Were there any exclusions from the standard? If yes, report these exclusions in the summary report table.	☐	☒
Is there an FDA guidance [6] that is associated with this standard?	☐	☒
If yes, was the guidance document followed in preparation of this 510k?	☐	☐

Title of guidance:

[1] The formatting convention for the title is: [SDO] [numeric identifier] [title of standard] [date of publication]

[2] Authority [21 U.S.C. 360d], www.fda.gov/cdrh/stdsprog.html

[3] http://www.accessdata.fda.gov/scripts/cdrh/cfdocs/cfStandards/search.cfm

[4] The summary report should include: any adaptations used to adapt to the device under review (for example, alternative test methods); choices made when options or a selection of methods are described; deviations from the standard; requirements not applicable to the device; and the name and address of the test laboratory or certification body involved in conformance assessment to this standard. The summary report includes information on all standards utilized during the development of the device.

[5] The supplemental information sheet (SIS) is additional information which is necessary before FDA recognizes the standard. Found at http://www.accessdata.fda.gov/scripts/cdrh/cfdocs/cfStandards/search.cfm

[6] The online search for CDRH Guidance Documents can be found at www.fda.gov/cdrh/guidance.html

Questions? Contact FDA/CDRH/OCE/DID at CDRH-FOISTATUS@fda.hhs.gov or call 301-796-8118.

Records processed under FOIA Request #2015-1305; Released by CDRH on 05-11-2016.

EXTENT OF STANDARD CONFORMANCE SUMMARY REPORT TABLE

STANDARD TITLE
ISO 14971 Medical devices - Application of risk management to medical devices 2007

CONFORMANCE WITH STANDARD SECTIONS*

SECTION NUMBER	SECTION TITLE	CONFORMANCE?
ALL	ALL	☒ Yes ☐ No ☐ N/A

TYPE OF DEVIATION OR OPTION SELECTED ◆

DESCRIPTION

JUSTIFICATION

SECTION NUMBER	SECTION TITLE	CONFORMANCE?
		☐ Yes ☐ No ☐ N/A

TYPE OF DEVIATION OR OPTION SELECTED ◆

DESCRIPTION

JUSTIFICATION

SECTION NUMBER	SECTION TITLE	CONFORMANCE?
		☐ Yes ☐ No ☐ N/A

TYPE OF DEVIATION OR OPTION SELECTED ◆

DESCRIPTION

JUSTIFICATION

* For completeness list all sections of the standard and indicate whether conformance is met. If a section is not applicable (N/A) an explanation is needed under "justification." Some standards include options, so similar to deviations, the option chosen needs to be described and adequately justified as appropriate for the subject device. Explanation of all deviations or description of options selected when following a standard is required under "type of deviation or option selected," "description" and "justification" on the report. More than one page may be necessary.

◆ Types of deviations can include an exclusion of a section in the standard, a deviation brought out by the FDA supplemental information sheet (SIS), a deviation to adapt the standard to the device, or any adaptation of a section.

Paperwork Reduction Act Statement

Public reporting burden for this collection of information is estimated to average 1 hour per response, including the time for reviewing instructions, searching existing data sources, gathering and maintaining the data needed, and completing and reviewing the collection of information. Send comments regarding this burden estimate or any other aspect of this collection of information, including suggestions for reducing this burden to:

Department of Health and Human Services
Food and Drug Administration
Office of Chief Information Officer
1350 Piccard Drive, Room 400
Rockville, MD 20850

An agency may not conduct or sponsor, and a person is not required to respond to, a collection of information unless it displays a currently valid OMB control number.

Questions? Contact FDA/CDRH/OCE/DID at CDRH-FOISTATUS@fda.hhs.gov or call 301-796-8118.

Records processed under FOIA Request #2015-1305; Release Approved by CDRH on 05-19-2016; OMB No. 0910-0120; Expiration Date: 12/31/13

Department of Health and Human Services
Food and Drug Administration

STANDARDS DATA REPORT FOR 510(k)s

(To be filled in by applicant)

This report and the Summary Report Table are to be completed by the applicant when submitting a 510(k) that references a national or international standard. A separate report is required for each standard referenced in the 510(k).

TYPE OF 510(K) SUBMISSION

☐ Traditional ☒ Special ☐ Abbreviated

STANDARD TITLE [1]

ISO 10993-1 Biological evaluation of medical devices - Part 1: Evaluation and testing within a risk management process 2009

Please answer the following questions	Yes	No
Is this standard recognized by FDA [2]?	☒	☐
FDA Recognition number [3]	#2-156	
Was a third party laboratory responsible for testing conformity of the device to this standard identified in the 510(k)?	☐	☒
Is a summary report [4] describing the extent of conformance of the standard used included in the 510(k)? If no, complete a summary report table.	☐	☒
Does the test data for this device demonstrate conformity to the requirements of this standard as it pertains to this device?	☒	☐
Does this standard include acceptance criteria? If no, include the results of testing in the 510(k).	☐	☒
Does this standard include more than one option or selection of tests? If yes, report options selected in the summary report table.	☐	☒
Were there any deviations or adaptations made in the use of the standard?	☐	☒
If yes, were deviations in accordance with the FDA supplemental information sheet (SIS) [5]?	☐	☐
Were deviations or adaptations made beyond what is specified in the FDA SIS? If yes, report these deviations or adaptations in the summary report table.	☐	☒
Were there any exclusions from the standard? If yes, report these exclusions in the summary report table.	☐	☒
Is there an FDA guidance [6] that is associated with this standard?	☒	☐
If yes, was the guidance document followed in preparation of this 510k?	☒	☐

Title of guidance: #G95-1, 5/1/95 Biological Evaluation of Medical Devices; Use of ISO 10993

[1] The formatting convention for the title is: [SDO] [numeric identifier] [title of standard] [date of publication]

[2] Authority [21 U.S.C. 360d], www.fda.gov/cdrh/stdsprog.html

[3] http://www.accessdata.fda.gov/scripts/cdrh/cfdocs/cfStandards/search.cfm

[4] The summary report should include: any adaptations used to adapt to the device under review (for example, alternative test methods); choices made when options or a selection of methods are described; deviations from the standard; requirements not applicable to the device; and the name and address of the test laboratory or certification body involved in conformance assessment to this standard. The summary report includes information on all standards utilized during the development of the device.

[5] The supplemental information sheet (SIS) is additional information which is necessary before FDA recognizes the standard. Found at http://www.accessdata.fda.gov/scripts/cdrh/cfdocs/cfStandards/search.cfm

[6] The online search for CDRH Guidance Documents can be found at www.fda.gov/cdrh/guidance.html

Questions? Contact FDA/CDRH/OCE/DID at CDRH-FOISTATUS@fda.hhs.gov or call 301-796-8118.

Records processed under FOIA Request #2015-1305; Released by CDRH on 05-11-2016.

EXTENT OF STANDARD CONFORMANCE SUMMARY REPORT TABLE

STANDARD TITLE
ISO 10993-1 Biological evaluation of medical devices - Part 1: Evaluation and testing within a risk management process 2009

CONFORMANCE WITH STANDARD SECTIONS*

SECTION NUMBER	SECTION TITLE	CONFORMANCE?
ALL	ALL	☒ Yes ☐ No ☐ N/A

TYPE OF DEVIATION OR OPTION SELECTED ◆

DESCRIPTION

JUSTIFICATION

SECTION NUMBER	SECTION TITLE	CONFORMANCE?
		☐ Yes ☐ No ☐ N/A

TYPE OF DEVIATION OR OPTION SELECTED ◆

DESCRIPTION

JUSTIFICATION

SECTION NUMBER	SECTION TITLE	CONFORMANCE?
		☐ Yes ☐ No ☐ N/A

TYPE OF DEVIATION OR OPTION SELECTED ◆

DESCRIPTION

JUSTIFICATION

* For completeness list all sections of the standard and indicate whether conformance is met. If a section is not applicable (N/A) an explanation is needed under "justification." Some standards include options, so similar to deviations, the option chosen needs to be described and adequately justified as appropriate for the subject device. Explanation of all deviations or description of options selected when following a standard is required under "type of deviation or option selected," "description" and "justification" on the report. More than one page may be necessary.

◆ Types of deviations can include an exclusion of a section in the standard, a deviation brought out by the FDA supplemental information sheet (SIS), a deviation to adapt the standard to the device, or any adaptation of a section.

Paperwork Reduction Act Statement

Public reporting burden for this collection of information is estimated to average 1 hour per response, including the time for reviewing instructions, searching existing data sources, gathering and maintaining the data needed, and completing and reviewing the collection of information. Send comments regarding this burden estimate or any other aspect of this collection of information, including suggestions for reducing this burden to:

Department of Health and Human Services
Food and Drug Administration
Office of Chief Information Officer
1350 Piccard Drive, Room 400
Rockville, MD 20850

An agency may not conduct or sponsor, and a person is not required to respond to, a collection of information unless it displays a currently valid OMB control number.

Questions? Contact FDA/CDRH/OCE/DID at CDRH-FOISTATUS@fda.hhs.gov or call 301-796-8118.

Department of Health and Human Services
Food and Drug Administration

STANDARDS DATA REPORT FOR 510(k)s

(To be filled in by applicant)

This report and the Summary Report Table are to be completed by the applicant when submitting a 510(k) that references a national or international standard. A separate report is required for each standard referenced in the 510(k).

TYPE OF 510(K) SUBMISSION

☐ Traditional ☒ Special ☐ Abbreviated

STANDARD TITLE [1]

ISO 10993-18 Biological evaluation of medical devices - Part 18: Chemical characterization of materials 2005

Please answer the following questions	Yes	No
Is this standard recognized by FDA [2]?	☐	☒
FDA Recognition number [3]	#N/A	
Was a third party laboratory responsible for testing conformity of the device to this standard identified in the 510(k)?	☒	☐
Is a summary report [4] describing the extent of conformance of the standard used included in the 510(k)? If no, complete a summary report table.	☐	☒
Does the test data for this device demonstrate conformity to the requirements of this standard as it pertains to this device?	☒	☐
Does this standard include acceptance criteria? If no, include the results of testing in the 510(k).	☐	☒
Does this standard include more than one option or selection of tests? If yes, report options selected in the summary report table.	☒	☐
Were there any deviations or adaptations made in the use of the standard?	☐	☒
If yes, were deviations in accordance with the FDA supplemental information sheet (SIS) [5]?	☐	☐
Were deviations or adaptations made beyond what is specified in the FDA SIS? If yes, report these deviations or adaptations in the summary report table.	☐	☒
Were there any exclusions from the standard? If yes, report these exclusions in the summary report table.	☐	☒
Is there an FDA guidance [6] that is associated with this standard?	☐	☒
If yes, was the guidance document followed in preparation of this 510k?	☐	☐

Title of guidance:

[1] The formatting convention for the title is: [SDO] [numeric identifier] [title of standard] [date of publication]

[2] Authority [21 U.S.C. 360d], www.fda.gov/cdrh/stdsprog.html

[3] http://www.accessdata.fda.gov/scripts/cdrh/cfdocs/cfStandards/search.cfm

[4] The summary report should include: any adaptations used to adapt to the device under review (for example, alternative test methods); choices made when options or a selection of methods are described; deviations from the standard; requirements not applicable to the device; and the name and address of the test laboratory or certification body involved in conformance assessment to this standard. The summary report includes information on all standards utilized during the development of the device.

[5] The supplemental information sheet (SIS) is additional information which is necessary before FDA recognizes the standard. Found at http://www.accessdata.fda.gov/scripts/cdrh/cfdocs/cfStandards/search.cfm

[6] The online search for CDRH Guidance Documents can be found at www.fda.gov/cdrh/guidance.html

Questions? Contact FDA/CDRH/OCE/DID at CDRH-FOISTATUS@fda.hhs.gov or call 301-796-8118.

Records processed under FOIA Request #2015-1305; Released by CDRH on 05-11-2016.

EXTENT OF STANDARD CONFORMANCE SUMMARY REPORT TABLE

STANDARD TITLE
ISO 10993-18 Biological evaluation of medical devices - Part 18: Chemical characterization of materials 2005

CONFORMANCE WITH STANDARD SECTIONS*

SECTION NUMBER	SECTION TITLE	CONFORMANCE?
ALL	ALL	☒ Yes ☐ No ☐ N/A

TYPE OF DEVIATION OR OPTION SELECTED ◆
Standard provides multiple methods for the characterization of a material. Methods selected from the standard are described with the 510(k) submission.

DESCRIPTION
Although not formally recognized by the FDA, use of this standard was based on request from the FDA reviewer (b)(4) [redacted]

(b)(4) [redacted]

JUSTIFICATION
Standard provides recommendations but does not dictate which characterization methods must be used. Selection of tests based on expert guidance from third party laboratory that conducted testing.

SECTION NUMBER	SECTION TITLE	CONFORMANCE?
		☐ Yes ☐ No ☐ N/A

TYPE OF DEVIATION OR OPTION SELECTED ◆

DESCRIPTION

JUSTIFICATION

SECTION NUMBER	SECTION TITLE	CONFORMANCE?
		☐ Yes ☐ No ☐ N/A

TYPE OF DEVIATION OR OPTION SELECTED ◆

DESCRIPTION

JUSTIFICATION

* For completeness list all sections of the standard and indicate whether conformance is met. If a section is not applicable (N/A) an explanation is needed under "justification." Some standards include options, so similar to deviations, the option chosen needs to be described and adequately justified as appropriate for the subject device. Explanation of all deviations or description of options selected when following a standard is required under "type of deviation or option selected," "description" and "justification" on the report. More than one page may be necessary.

◆ Types of deviations can include an exclusion of a section in the standard, a deviation brought out by the FDA supplemental information sheet (SIS), a deviation to adapt the standard to the device, or any adaptation of a section.

Paperwork Reduction Act Statement

Public reporting burden for this collection of information is estimated to average 1 hour per response, including the time for reviewing instructions, searching existing data sources, gathering and maintaining the data needed, and completing and reviewing the collection of information. Send comments regarding this burden estimate or any other aspect of this collection of information, including suggestions for reducing this burden to:

Department of Health and Human Services
Food and Drug Administration
Office of Chief Information Officer
1350 Piccard Drive, Room 400
Rockville, MD 20850

An agency may not conduct or sponsor, and a person is not required to respond to, a collection of information unless it displays a currently valid OMB control number.

Questions? Contact FDA/CDRH/OCE/DID at CDRH-FOISTATUS@fda.hhs.gov or call 301-796-8118.

Records processed under FOIA Request #2015-1305; Released by CDRH on 05-11-2016.

Tab 9

Quality Documentation

The following documents are being provided in this section:

- Quality Information

There are no new issues of safety or effectiveness identified including hazards related to material selection.

(Please turn the page)

© 2013 Koninklijke Philips Electronics N.V. All Rights Reserved
Questions? Contact FDA/CDRH/OCE/DID at CDRH-FOISTATUS@fda.hhs.gov or call 301-796-8118.

Records processed under FOIA Request #2015-1305; Released by CDRH on 05-11-2016.

1. Introduction

The information in this section contains results from the MAUDE database search which can be found on the FDA website (www.fda.gov). The quality information consists of post-market surveillance found on similar medical devices to that of REMstar SE and other CPAP platforms. The information was reviewed for any possible new safety hazards that may impact the development stages of this project, in which none were found to be considered "new" to the project.

If any estimated risks arise from the hazardous situations that are no longer acceptable OR if any previously unnoticed hazards are present, these will be inputs to the REMstar SE Risk Matrix.

2. MAUDE data on similar devices

Maude report - manufacturer and user facility device experience *bzd*

	Maude#	*reported*	*product*	
	product code			
1	*756051*	*8/24/2006*	*cpap, *, ** *Bzd*	*life threatening* ***comment:***

Use of cpap machine through provider for treating sleep apnea resulted in near suffocation. Back pressure from device restricted exhalation, resulting in increase of sleep apnea. provider was aware of patient complaint that device restricting breathing, advised to continue use in order to "get used to it." when told over the phone of incident, provider advised for the first time there was an alternate product available with zero exhalation pressure.

2	*938160*	*10/31/200*	*aeiomed, Everest, cpap heated humidifier sold* *Through evo medical, hh1,* *Bzd*	*disability* ***comment:***

Received a call from client at 9:00 am in 2007, stating she had a problem with crap unit at her home during the night. Apparently the unit had overheated, sparked, and shut down. Client brought unit into office that morning and unit was viewed by the respiratory therapist present, removed from service, and exchanged with like unit. Patient states that when tried to restart this morning noticed burning odor, unit would not come on, and noticed unit had burn spot on bottom and had small hole in bottom of humidifier chamber holder. No damage to property or client noted as unit was sitting on a glass covered bedside stand. Unit is a cpap heated humidifier, model hh1, manufactured by aeiomed, and sold. Unit was immediately removed from service and exchanged. Two locations had seen some similar problems as far as humidity getting on the heater contacts, but were explained as improper filling or drying on the client's

3	*562719*	*12/30/200*	*bird products corp., infant flow system, ventilator* *Non-continuous, m672p, 772183* *Bzd*	*life threatening* ***comment:***

Reporter emailed to report that a customer filed a complaint against the infant flow driver reporting that this driver caused two pneumothoracies to occur on this pt with ttn. He is in possession of the driver and is awaiting "instructions." rep explained to him that pneumothoracies are a common complication associated with ncpap and that as a distributor; he can verify the "performance" of the deliver. Reporter also reports that two years ago, a similar "incident" was filed by the same hosp on the same driver. At that time, eme investigated and found nothing wrong with the driver. Rep suggested also some "education" be given to the end-user on complications of ncpap...and indications for use. Rep forwarded email to international sales/marketing. "Here are the details discussed about ncpap driver. The pt was 34 weeks gestation and had a condition called transient tachypnoea of the newborn (ttn). The pt did not receive any resuscitation measures at

© 2012 Koninklijke Philips Electronics N.V. All Rights Reserved

Questions? Contact FDA/CDRH/OCE/DID at CDRH-FOISTATUS@fda.hhs.gov or call 301-796-8118.

Records processed under FOIA Request #2015-1305; Released by CDRH on 05-11-2016.

birth and was administered o2 via head box for about 16 hours. Due to increasing o2 requirements, the pt was placed on ncpap and over a six hour period their condition began to deteriorate and was diagnosed as having two pnemothoraces. The pt was then managed on mechanical ventilation. “The viasys service dept tech evaluated the unit and was unable to find any problem with the unit. The viasys service dept tech ran the unit through a complete checkout to ensure that it meets all factory specifications. Upon completion the unit was returned to the customer (distributor) ready to be returned to their customer and be placed back into service. No component and symptom trend has been identified and this event is considered to be an isolated incident. There are no corrective and/or preventative measures at present.

4 *819634 2/15/2007 cardinal health, infant nasal cpap generator, infant Nasal cpap generator, 006905, 006905* *required intervention*

Bzd ***comment:***

Customer complained of pt skin irritation and breakdown. Some pts were seeing redness, breakdown, and some ulcerations/sores on forehead. Visit was made to account to discuss. One month later, the account started applying a foam insert under the generator and fixation device to try and improve the problem. Skin breakdown continued, occurring more frequently. The following year, two pts had severe ulcerations resulting in permanent skin damage according to account. Based on the reported issue rec'd an on-site visit to the hosp was performed. Info gathered prior to the visit indicated that the hosp was placing foam blocks in between the headgear and the infant’s forehead causing redness and blistering. At this time, it was determined that the foam blocks were the prime contributor for the reported issue and it is not part of the product design. The hosp informed cardinal health that based on our recommendations as of 1/25/2007; they ceased use of the foam blocks. There have been no further reports of skin excoriation and blistering from the facility at this time.

5 *934485 10/26/200 Chad therapeutics, oxymatic om-411a, oxygen conserving device, om-411a, na* *required intervention*

Bzd ***comment:***

Several requests have been made to return device for evaluation. Device is currently held at an independent organization awaiting further device/event analysis. On 09/27/2007, Chad therapeutics customer service received a phone call from reporter. Reporter stated that they investigate equipment that they receive for possible fire and water damage. Reporter described what happened based on the info he was given: the patient was using an om-411a, which was sold in 2001. The patient is on a wheelchair, he stated that something had blown but was not the cylinder. The patient's wheelchair was not damaged, the battery compartment is melted and blackened, the house porch is scorched and the porch light no longer works. On 10/01/2007, co contacted reporter to obtain add'l info, he said the event took place on approx three months earlier. He did not have any patient info. Co requested that the device be sent to us, but reporter had to check if he could send it. On that same day co contacted healthcare customer service to try and obtain add'l info. On 10/10/2007 reporter was contacted again for add'l info or the return of the device, none was obtained. Reporter was contacted again two times in the same month. It is important to note that co was not officially notified of the event until 09/27/2007.

6 *823049 2/27/2007 Chad therapeutics, inc., om-411a oxygen conserving Device, oxymatic, om-411a, na* *required intervention*

Bzd ***comment:***

On February 14, 2007, Chad received a fax from an insurance provider for distributor. In this fax, they specified an incident where pt was burned as a result of a flash fire. This fire occurred near the intersection between the cylinder valve and our om-411a device. We spoke with pt on 02/22/2007. Pt explained that he went to bed at approximately 9:00 pm. around 11:45; he was awaken by a hissing noise. He hit the conserver to stop the noise. At that point, a flash fire started. He quickly got out of bed, ran to the door and tossed the cylinder, valve and om-411a onto the front yard. Pt received burns on his arm between the hand and the elbow. His carpeting was also burned in two places. It is important to note that Chad was not officially notified of the incident until 02/14/2007.a corrective action request has been initiated so that a complete investigation can be documented and implemented. As noted earlier, Chad has sent the device to an independent laboratory for analysis. A summary of this investigation and the corrective action will be submitted as a supplemental report to this mdr.

7 *210411 2/5/1999 Chad therapeutics, inc., oxygen conserving device, Axiomatic, om-301, om-301* *death*

Bzd ***comment:***

It was reported to Chad therapeutics that, a pt was in the exam room waiting for the dr, when she heard a "pop and a swoosh noise,

 © 2012 Koninklijke Philips Electronics N.V. All Rights Reserved

Questions? Contact FDA/CDRH/OCE/DID at CDRH-FOISTATUS@fda.hhs.gov or call 301-796-8118.

Records processed under FOIA Request #2015-1305; Released by CDRH on 05-11-2016.

and run-out of the office on fire". The pt was flown by helicopter to trauma center for treatment. It was reported to Chad on February 2, 1999, the pt perished on January 23, 1999.

8 *161290 4/2/1998 Chad therapeutics, inc., oxygen conserving device, Oxymatic, om-301, om-301* *hospitalization*

Bzd ***comment:***

Home dealer called Chad therapeutics, inc., stating that "his pt involved in accident while using the oxymatic device". While driving on the freeway the unit failed to function and he did not notice the lack of pulse, as noise from his car radio was too loud. Pt passed out and ran off the freeway. This is the second time the unit was returned for check up. The first time it was sent to Chad was in 9/96, under rma no. 3494, when the dealer claimed that the unit was leaking. At the time co could not confirm the leak. The unit was returned to the dealer after it was recalibrated and thoroughly tested. Unit was first released to finished goods on 6/8/96. Summary of findings: 1. the returned oxymatic unit did not pulse when tested both with its own battery and with the oxymatic tester power supply. 2. Two product components, the valve and sensor were identified as the causes of the malfunction. At one time the valve was found to be leaking and in another time the same valve did not cause any leak. The instability of the sensor was also a major factor that contributed to the malfunction. 3. Replacing the sensor with a stable and adjustable sensor will put back the unit in operational condition. Investigation: co's investigation conducted on 3/2/98 revealed that the regulator was providing the right pressure and flow. There was nothing wrong with the regulator.

9 *766709 9/26/2006 fisher & paykel healthcare, oracle, oral cpap mask, hc452a, ** *required intervention*

Bzd ***comment:***

Sleep apnea pt used oracle hc452a oral cpap mask for one night. Pt awoke the next morning to find gum line sore and noticed a small piece of gum tissue below lower front tooth missing. Pt has been to see periodontist who recommends taking a graft from upper mouth to stop problems from developing further. "I am a family physician. I have sleep apnea and typically mouth-breathe, so your particular mask was appealing to me. I read the instructions and used your mask for one night. When I awoke the next morning, my lower gum line was sore and I noticed that a small piece of my gum tissue below my lower front tooth was missing. I have been to see one of the leading periodontists in our town, and he feels that your product is to blame for the damage to my gums. He has seen me at least two yrs and has charted my gums at each visit. I am going to have to pay to have a graft taken from my upper mouth and grafted to the front lower gum line. He is having to do this to stop any further problems from developing and because the gum line has been hurting for the last few months. I believe that your co has created a poor product. I was very careful to read the directions and consider myself to have above average intelligence, and yet I now have this problem to contend with. I believe that I should receive the money for my surgery and additional money to compensate for pain and suffering and lost work time. Product eval is in progress. Validity of incident was being investigated due to complainant's request for monetary compensation, hence delay in reporting. On confirmation of injury potentially involving fisher and paykel product, an mdr was filed and internal capa item rose to support appropriate f/u and closure. Pt indicates that he has been seeing a periodontist for over 2 yrs, and has experienced gum pain for some months. User instructions state that the prescribing physician should consider the dental history and oral health status of pt prior to prescribing device. If a pt has loose teeth or periodontal disease, a dentist should be consulted prior to use.

10 *998745 2/19/2008 fisher & paykel healthcare, ltd., plexifit hc432 full Face mask, hc432a* *required intervention*

Bzd ***comment:***

The device was unavailable for investigation and no lot number was provided. Analysis is based on the event description provided and previous experience. Results: while it was stated that an allergic reaction occurred on the bridge of the nose with the maa nurse requested product materials info for a pt using an hc431 full face cpap mask. The pt was treated for contact dermatitis on the bridge of the nose and near the eye. The pt had also seen an optometrist to have their eye examined and it looked "real

11 *938472 11/7/2007 fisher & paykel healthcare, ltd., flexifit hc431 full Face mask, hc431a,* *required intervention*

Bzd ***comment:***

© 2012 Koninklijke Philips Electronics N.V. All Rights Reserved

Questions? Contact FDA/CDRH/OCE/DID at CDRH-FOISTATUS@fda.hhs.gov or call 301-796-8118.

Records processed under FOIA Request #2015-1305; Released by CDRH on 05-11-2016.

The device was unavailable for investigation and no lot number was provided. Results: analysis is based on the event description provided. While it was stated that an allergic reaction occurred on the bridge of the nose with the mask material, the actual injury is more likely to be from a pressure sore occurring on the bridge of the nose. Pressure sores on the bridge of the nose are possible when the patient over tightens the mask for a prolonged period, or by sleeping habits. Increased tightening may occur in some patients to improve the sealing of the mask to suit their unique facial contour. Conclusion: the patient injury healed without complications following topical ointment application. There was no information suggesting a malfunction with the device. We have received similar complaints of pressure sores and are currently trending this at an occurrence rate of approximately 0.0047% for the last year. This complaint has been added to the database for monitoring and trending. Distributor stated that the patient was using the hc431a mask and developed an allergic reaction on the bridge of the nose from the mask and was requested by the distributor to go to the hospital emergency room. Additional information obtained on 10/27/2007 from the distributor stated that the patient had impetigo and received antibiotics and steroids until the sore healed.

12 *315600* *2/8/2001* *Invacare corp., pulse dose oxygen conserving device, Noncontinuous ventilator, venture, i0h100ru venture hom* *required intervention*

Bzd ***comment:***

Mfr rec'd a report from a dealership alleging that a pt was replacing a home-fill tank, when the brass fitting erupted causing the hose to hit the pt. as a result of the incident the pt sustained a bruise and a cut to the leg.

13 *518095* *3/24/2004* *resmed ltd., Sullivan v, cpap device, 21001, 21001* *disabilities*

Bzd ***comment:***

Pt was totally deaf while using the cpap device. The pt lost their hearing in 2003 but pt did not report the incident to the co until eight mos later. the setting should be 18 cm h2o not 18 psi as claimed by the pt.co is still in the process of collecting additional info from the pt and evaluating the claim. co is against use during upper respiratory infections because of concerns about eustachian tube issues. the mechanism is speculative and has no scientific backing. sudden deafness can occur during upper respiratory infection and the likely cause is the infection, not the cpap. viruses tend to move widely during infections irrespectively of cpap and there is no way of knowing what the cause of the problem was.

14 *303248* *10/16/200* *resmed ltd., Sullivan vrap ii st a, sleep apnea Respirator, Sullivan vpap ii st a, **** *death*

Bzd ***comment:***

Pt was admitted to facility with a respiratory infection. Pt was on a resmed vpap ii st which was supplied by h.s.c. who is resmed's customer. Pt had a.s.l. relatives at facility had indicated that the pt was on a nebulizer as well as the resmed equipment at the time of death. An arrangement is being made to evaluate the device by ecri.reportedly, the incident device was used to provide respiratory support for a pt at a medical center. The vpap unit was observed to be generating mist in 09/2000, while a respiratory therapist was administering a nebulization treatment. The nebulization treatment was driven by a bedside oxygen source and delivered through a t-piece inserted between the pt's mask and the vpap's tubing. The settings recorded on the ventilator flow sheet supplied by the medical center are as follows: the controls are: ipap, epap, and bpm and respective settings are: 10 cmh2o, 4 cmh2o, and 18. The settings on the vpap unit as co received it corresponded to these settings. Ecri received the incident vpap unit and rubbing with an exemplar face mask and nebulizer via ups on 11/22/00. There was no visible damage to the shipping package or the unit and tubing. Co inspected and tested the incident vpap unit guided by ecri's published inspection procedure for critical care ventilators in the health devices inspection and preventive maintenance system. No destructive testing was performed. Co operated the unit with the exemplar nebulizer continuously for 8hr without incident. Actual pressures and rates were within 5% of the set values, which is acceptable. All alarms and displays functioned correctly. Co removed the exterior casing of the vpap unit and visually inspected interior components. Co also performed a visual inspection of the tubing. Co observed no signs of moisture or liquid egress on the exterior of the unit. However, visual inspection of the tubing showed medication residue on the pt end of the tubing and a few small deposits in the middle of the tubing. Conclusions: co observed no evidence of mist generation and found no other problems during co's inspection and testing of the vpap unit. Co is unable to account for the misting noted during operation with the nebulizer.

15 *513019* *2/12/2004* *Respironics, unit BiPAP, BiPAP machine, BiPAP vision* *required intervention*

Bzd ***comment:***

BiPAP unit stopped cycling, pt desaturated.

 © 2012 Koninklijke Philips Electronics N.V. All Rights Reserved

Questions? Contact FDA/CDRH/OCE/DID at CDRH-FOISTATUS@fda.hhs.gov or call 301-796-8118.

Records processed under FOIA Request #2015-1305; Released by CDRH on 05-11-2016.

16 *484798 9/12/2003 Respironics, Respironics, unit breathing therapy, 582059, ** *hospitalization*

Bzd ***comment:***

Monitor alarmed 72% saturation. BiPAP machine showed normal cycle. Pt bagged with 100% o2.

17 *347333 8/14/2001 Respironics, Respironics, bi-pap full face mask, *, ** *required intervention*

Bzd ***comment:***

The magnetic flap valve housing came apart and the one way valve fell out. The machine was not able to provide the required oxygen therapy. (Mfr reported that this was a design flaw, and now masks are ultra-sonically welded).

18 *296820 9/18/2000 Respironics, profile lite mask, profile lite mask,* *required intervention*

1002371, 1002371

Bzd ***comment:***

Mask split, and the gel material leaked into pt's eye. Note: no user facility report rec'd. Parts a-f completed by the mfr. customer has refused to return mask for eval. Circumstances surrounding reported event cannot be confirmed. No conclusion can be reached whether the device malfunctioned: or the event was caused by user error or misuse. No previous reports of similar nature have been rec'd. Product has passed all biocompatibility testing. Standard disclaimer on file.

19 *24999311/17/199Respironics, BiPAP s/t domestic home system, non-* *death*

Continuous, 1000984, 1000984

Bzd ***comment:***

Note: sections d and f contain corrected info. The device, along with the concomitant product, was evaluated at the user facility. The device was found to be out of calibration at high flow by approx .5 cm h2o, but otherwise met performance specs. This o

20 *608271 5/28/2005 Respironics (Ireland) limited, neopap, neonatal* *required intervention*

Cpap/humidifier system, 1023195, 1023195

Bzd ***comment:***

The device was reported to have shut down after 26 hours of functioning. The user reported that the device alarmed and the alarms were reset several times by the caregiver staff. The patient had a desaturation episode and experienced bradycardia but responded to receiving oxygen without incident. There was lasting patient harm. Device evaluation: the unit was examined and was found to function correctly. The error log suggests that the battery ran log with ac power disconnected. Information obtained from the user facility indicated that there may have been a loose connection with the ac power source, as they moved the device around to help maintain a good position for circuit.

21 *344894 8/3/2001 Respironics Georgia, inc., total face mask, nasal mask,* *death*

302433, 302433

Bzd ***comment:***

Pt was on BiPAP vision and total face mask for palliative treatment. Pt removed mask and device alarmed. Oxygen saturation levels dropped to 70's but returned to normal when mask was reapplied. Pt was sedated but forcefully removed mask a second time with device alarm. The mask entrainment valve became separated from the mask and could not be properly reassembled. A substitute mask was utilized, but pt expired before appropriate ventilation could be re-established.h.6. - event was the result of the pt forcefully removing the mask and causing damage to the mask. The mask did not malfunction or alter the outcome for this pt, and therefore did not cause pt's death. Device was not returned for eval.

© 2012 Koninklijke Philips Electronics N.V. All Rights Reserved

Questions? Contact FDA/CDRH/OCE/DID at CDRH-FOISTATUS@fda.hhs.gov or call 301-796-8118.

Records processed under FOIA Request #2015-1305; Released by CDRH on 05-11-2016.

22 *314620 2/2/2001 Respironics Georgia, inc., simplicity, nasal mask, 1002757, Na* *required intervention*

Bzd ***comment:***

Pt reportedly required skin grafts from an allergic reaction to a simplicity mask. Pt experienced minor skin irritation from 2 Respironics masks prior to using simplicity, it is unclear how long any of the masks were used prior to a reaction or whether irdevice was not returned to mfr for evaluation. The skin contacting materials used in simplicity underwent biocompatibility testing and passed all tests. Materials were determined to be acceptable for the intended use. Labeling instructs user to "contact y

23 *926354 10/12/200 Respironics Inc, BiPAP vision, non continuous ventilator, 582059, na* *life threatening*

Bzd ***comment:***

The device settings were ipap12 cmh2o, epap7 cmh2o. The fio2 and back-up rate settings were not recorded or available from the customer. The customer reported that the device shut down with no alarm and display while in pt use. The event allegedly occurred when the device was moved and the main power switch was inadvertently pressed resulting in the device powering down as designed to when the switch is set to the "off" position. There is no audible alarm when the device is powered down using the main power switch. It was reported by the customer that the pt's condition was critically ill prior to the device being powered off. The facility was alerted to the incident when the pts' physiologic condition resulted in the activation of a low heart rate alarm which was audibly annunciated at the nurse's station. CPR was initiated and pt was placed on mechanical ventilation. The family decided to withdraw ventilatory support and the pt passed away. the facility performed tests on device and the device functioned to spec. the device was also evaluated by the mfr service rep, and found to be functioning to spec. the device was returned to the mfr for further engineering investigation and found the device to operate to spec. the facility concluded that the pt's outcome was not a result of the event. The device is intended to augment spontaneous ventilation and function as a ventilatory assist device and is not designed or labeled for use as a life support device.

24 *7520238/24/2005Respironics Inc, REMstar, machine for OSA, bi pap pro 2 with he, ** *life threatening*

Bzd ***comment:***

I have a Respironics BiPAP pro 2 OSA machine. It stops for no reason while sleeping causing gasping and choking. It has an auto on feature and does come back on by itself. I have been told to disable this feature though. The machine is used to keep the airway open while sleeping and stopping with the nasal mask obstructing the airway can be hazardous and even cause strangulation and death. Their manual even states this. Has been used for 6 months except for time in transit for repairs.

25 *465784 6/11/2003 Respironics Inc, *, BiPAP-intermittent air vent, *, ** *death*

Bzd ***comment:***

Pt was involved in road traffic accident in 9/2000. Pt was trapped in the car for about for 30 minutes before being rescued. Family member was driving. Pt was taken to hospital where they were admitted to the e.r. pt had a ruptured spleen with five broken ribs with flail chest. Pt also had a collapsed right lung. Pt was put on the ventilator for 10-12 days and then put on BiPAP machine for 3-4 days. Pt improved a bit and was relieved of all breathing systems for 5.5 hours but had to be put back on it when pt developed breathing problem, pt developed pneumonia while in hospital. Was pronounced brain dead in 2000, was put on life support for seven days. Life support removed in 2000.

26 *929606 10/19/200 Respironics inc., BiPAP vision, non continuous Ventilator, 582059, 582059* *life threatening*

Bzd ***comment:***

The pt was using a nasal mask with single bore tubing. The device settings were as follows: ipap-14 cmh2o. epap=6 cmh2o. st mode. fio2=70%.information was received from the customer alleging potential injury while using the device. This potential for injury resulted when the device entered a non-operational state as a result of the removal of ac power during an auxiliary electrical test at the facility. The customer

 © 2012 Koninklijke Philips Electronics N.V. All Rights Reserved

Questions? Contact FDA/CDRH/OCE/DID at CDRH-FOISTATUS@fda.hhs.gov or call 301-796-8118.

Records processed under FOIA Request #2015-1305; Released by CDRH on 05-11-2016.

reported that the device alarmed, exhibited a blank screen with power indicator still illuminated when the power was lost. The customer reported the pt experience bradycardia but it is unk when the bradycardia alarm occurred in relation to the alleged event. The pt was resuscitated and placed back on device after the customer restarted the system to return it to an operational state. The pt was subsequently placed on another device by the customer. The customer did not provide the span of time that elapsed between the pt being resuscitated and being placed on another device. The facility reported that the pt was on the verge of intubation prior to the generator test occurring. This device is labeled for use as an assisted ventilator and is intended to augment a spontaneous breathing pt. it is not intended to provide total ventilatory requirements of the pt needing intubation. The pt reportedly expired one week later and the customer has not reported if they believe the pt outcome was related to this incident. Based on the available information, it cannot be determined if the device operated outside of design specifications. The facility has requested a third party to investigate the device. Information has not been received as to date on the investigation. The facility will not release the device to Respironics for an engineering investigation at this time.

27 *905238 8/30/2007 Respironics inc., BiPAP auto, non continuous ventilator, 1017439, 1017439* *hospitalization*

Bzd ***comment:***

The patient has refused to return the device for evaluation. Information was received from a vendor quality report that a patient allegedly woke up at 8-9am with severe chest pain, sweatiness, and shortness of breath. The patient also reported the odor of an "electrical burning smell". The patient was reported to have been transported to the hospital where he was diagnosed with a "cardiac event". Several requests were made to the patient and home care provider for additional information. These requests have not been honored to date. The patient has refused to return the device for evaluation. There is no indication that the device ceased to function during this reported event. It is unknown if a device failure occurred or if the device caused or contributed to the alleged adverse event. A review of the service history record indicated that the device has not been returned to the manufacturer for service since initial distribution. A review of the device history record was also performed and the device was found to have passed all specifications prior to distribution. If further information becomes available a follow up report will be submitted.

28 *8976728/16/2007Respironics inc., BiPAP vision, non-continuous Ventilator, 582059, 582059* *required intervention*

Bzd ***comment:***

A request has been made to receive the device back for eval. The device has not been rec'd to date. If further info becomes available, a follow up report will be submitted. Information was rec'd from a customer alleging a potential injury while using the device. There is no allegation of device malfunction. The device was not provided power during an auxiliary electrical test at the facility. The ac power was removed for up to 15 seconds. The pt was reported to have become apenic and as a result intubated and mechanically ventilated. The facility reported that the pt was not a candidate for noninvasive ventilation. Follow up info obtained indicated that the pt was reported to have been doing fine on mechanical ventilation and has suffered no adverse effects from the incident. The settings being used for this device are unknown. Based on the available info, the device appears to have operated as designed. labeling for the device states that if the devices loses power, and power is restored after 10 seconds, the device restarts in the system self test mode and the monitoring button must be pressed to reset the parameters and begin therapy using the same settings that were in effect. This process is explanted in the device labeling. this device is also labeled for use as an assist ventilator and is intended to augment the ventilation of a spontaneous breathing pt. it is not intended to provide the total ventilatory requirements of the pt. the device was tested by the user facility and was found to operate to specification. The device has been requested for eval and has not yet been rec'd. If further info becomes available, a follow up report will be submitted. The account mgr will be conducting additional training at the facility with respect to device operation and patient section.

29 *840953 4/13/2007 Respironics inc., unk, non continuous ventilator, unk, unk* *death*

Bzd ***comment:***

Information was received stating that a pt expired while using a BiPAP device. It is alleged; the pt used a BiPAP device in conjunction with another mfr's mask and tubing for respiratory assistance. The tubing allegedly became disconnected and the pt reportedly expired. The pt was reportedly being monitored by a caregiver at the time of the event. Pulmonary edema is the reported cause of death. The model and serial number of the BiPAP device allegedly involved in this event are unknown at this time. Requests for this info have been denied. No add'l info is available at this time. Labeling for BiPAP devices indicates this type of device is intended to provide non-invasive ventilation in adult patients (>30 kg) for the treatment of respiratory insufficiency (a condition in which the patient can continue without ventilation for some period, such as overnight) or obstructive sleep apnea. It appears that a BiPAP device may not have been the appropriate type of device for this patient due to his progressive disease state.

 © 2012 Koninklijke Philips Electronics N.V. All Rights Reserved

Questions? Contact FDA/CDRH/OCE/DID at CDRH-FOISTATUS@fda.hhs.gov or call 301-796-8118.

Records processed under FOIA Request #2015-1305; Released by CDRH on 05-11-2016.

30 *312698 1/12/2001 Respironics inc., Respironics contour de luxe nasal Mask & de luxe headstrap, breathing mask attach to Cpap unit, *, * required intervention*

Bzd ***comment:***

Plastic o ring that holds breathing mask and elbow that connects to the hose of the cpap unit came off while in use. This makes the whole mask unit to be replaced at a cost of $69.00. The thin "o" ring which was made of clear plastic is hard to locate at

31 *633859 9/9/2005 Respironics Ireland ltd, neopap, ventilator, continuous, Facility, 1025310, 1025310 required intervention*

Bzd ***comment:***

User reported that while using the device at high input gas pressure, 67.5 psi, the cpap pressure delivery oscillated for a period after 24 hours operation which affected oxygen delivery accuracy. Reportedly, the patient had a brief desaturation which quickly resolved by increasing fio2. There was no reported patient harm. The set alarm parameters were not violated therefore no alarm sounded at the time of the event. Unit tested and behavior verified 08/2005. Such behavior found to exist only at pressures above 62 psi, with settings of 5 or more cmh2o cpap.unit tested and behavior verified 08/2005. Pressure oscillation is only exhibited when inlet pressure is above 62 psi and at fio2 settings below 37% with settings of 5 or 6 cmh2o cpap. a pressure regulator will be installed at the device inlet to limit inlet pressure to 50 psi to correct the problem.there have been no known design changes or modifications since the device was first marketed, that could have led to the event.

32 *1001549 2/21/2008 Respironics, Inc, s profile lite nasal mask/hgr-dom, Ventilator, non-continuous (respirator), 1004087 required intervention*

Bzd ***comment:***

The nasal cpap mask was not returned to the mfr for investigation. A pt alleged, their upper teeth became misaligned as a result of receiving approx two years of cpap therapy through a nasal cpap mask. The cpap therapy was provided through a nasal cpap mask (secured to the pt by a headgear assembly) by a cpap device

© 2012 Koninklijke Philips Electronics N.V. All Rights Reserved

Questions? Contact FDA/CDRH/OCE/DID at CDRH-FOISTATUS@fda.hhs.gov or call 301-796-8118.

Records processed under FOIA Request #2015-1305; Released by CDRH on 05-11-2016.

33 *667398 1/23/2006 Respironics, inc., BiPAP vision ventilatory support System, BiPAP machine (ventilatory support), 582059j, Unknown (rental)* *required intervention*

Bzd ***comment:***

Pt was located in the intensive care unit and was utilizing a BiPAP machine for ventilatory assistance. The machine suffered an apparent electrical short, which caused it to cease functioning. Immediate intervention was required. Pt suffered no apparent harm secondary to the incident.

34 *648974 12/2/2005 Respironics, inc., profile lite w/headgear dom, nasal Mask, 1004089, 1004089* *hospitalization*

Bzd ***comment:***

Information was received from the pt alleging that that the prongs from the mask broke his skin which allowed dye from the mask to enter his bloodstream. He also claimed that part of material from his headgear became embedded under his skin and caused an infection. The pt was treated by a physician who prescribed oral and intravenous antibiotics. The treatment continued for several days at the pt's home. The infection allegedly became worse such that he was then admitted to the hospital, where he was placed on additional antibiotics. The infection has cleared and the pt is now resting at home. At this time, attempts to retrieve the device have been unsuccessful. Product has passed all biocompatibility testing.

35 *576077 2/25/2005 Respironics, inc., BiPAP pro bi level system, ventilator, Non-continuous (respirator), 1007216, 1007216* *death*

Bzd ***comment:***

Info was received that a pt expired while using the device. Report alleged that the unit "was malfunctioning" and "kept resetting". Despite attempt to obtain additional info regarding the alleged malfunction, none have been made available. Details related to the cause of death have not been provided and no autopsy was not performed. The equipment settings at the time of the event are unk. The equipment has not yet been returned for eval. It is unk at this time whether a device failure had actually occurred, and whether there was any association between the use of the device and the pt's outcome. The intended use of this device is for treatment of adult obstructive sleep apnea only and is not intended as life support.h6 - this device is scheduled to be returned for mfr eval.

36 *573616 2/17/2005 Respironics, inc., BiPAP s/t - d, non-continuous Ventilator, 332110, 332110* *death*

Bzd ***comment:***

Information was received that a pt expired while using the device. Report alleged that the pt's family member was awakened by a change in the sound of the device, and that the device did not alarm. The report alleges that the pt was discovered to be not breathing and was later pronounced dead. Despite attempts to obtain additional information, none has been made available. Additional pt history and a copy of the coroner's report are unknown. The equipment and alarm settings at the time of the event are unknown. An evaluation of the unit has not been performed at the time and efforts to obtain the equipment have been unsuccessful. It is unknown at this time whether a device failure had actually occurred, and whether there was any association between the use of the device and the pt's outcome. Device labeling indicates it is an assist ventilator and is intended to augment pt breathing. It is not intended to provide the total ventilatory requirements of the pt. the device are intended for use in the hospital setting on appropriate pts. Acute respiratory insufficiency; acute respiratory failure; obstructive sleep apnea syndrome.

 © 2012 Koninklijke Philips Electronics N.V. All Rights Reserved

Questions? Contact FDA/CDRH/OCE/DID at CDRH-FOISTATUS@fda.hhs.gov or call 301-796-8118.

Records processed under FOIA Request #2015-1305; Released by CDRH on 05-11-2016.

37 *540968 8/26/2004 Respironics, inc., BiPAP pro 2, BiPAP, 1017342, 1017342 deaths*

Bzd ***comment:***

Information was received from the customer that the pt's family alleges that the pt was on the unit and was found deceased in the morning. The family also indicated that the pt was on the machine and the unit had displayed an e52 (indicating a motor speed error). An evaluation of the equipment was preformed by Respironics and the device was found to be operating to specification. The technicians reviewed the error log in the unit and could find no record of error codes that were recorded. The error log would have recorded the event to memory prior to displaying an error code. The pt usage information data indicated that the device was used infrequently. The data shows daily usage of 8, 39, 0, 63, 20, 0, 61 and 3 minutes for the eight days the unit was in service. The data has also indicated that the system was experiencing large mask leaks and manual system shut downs. The intended use of the BiPAP pro 2 bi-level system is to deliver positive airway pressure therapy for the treatment of adult obstructive sleep apnea (OSA) only. It is not a life support device.

38 *5399658/20/2004 Respironics, inc., REMstar pro, cpap, 1005961, 1005961 death*

Bzd ***comment:***

An invasively ventilated pt using this cpap became decannulated and subsequently expired. Additional info received from the customer is that the pt was prescribed an airway pressure monitor, an apnea monitor and a pulse oximeter - none of which were in use at the time of death per the customer and investigating coroner. The coroner indicated that the LPN left pt in bed at home around 9:00 pm to prepare a night-time bottle. When the LPN returned approximately four or five minutes later, the pt had become decannulated (the circuit remained connected to the unit) and non-responsive. The pt was taken to the hospital and pronounced dead at 11:14 pm. per the coroner, the LPN alleges that the cpap did not alarm during the incident. An evaluation of the equipment was performed by Respironics and the device was found to be operating to specification. Upon receipt of the equipment, the mask alert (large circuit leak alarm) was turned "off."h6 - the intended use of the REMstar pro is for treatment of adult obstructive sleep apnea only. It is not intended for use as invasive life support of pediatric pts. Additional prescribed equipment including alarms for airway pressure, respiration, oxygen saturation and heart rate were not in use at the time of

39 *532509 7/1/2004 Respironics, inc., BiPAP s/t-d, 868.5895 ventilator, Continuous minimal ventilatory support, 332110, 332110 death*

Bzd ***comment:***

Info received from the homecare provider is as follows. Homecare provider received a letter from an attorney stating that the actual cause of death is not known at this time and there was no specific allegation listed in the letter. The attorney has possession of the device and there is a claim of whether the devices were functioning properly. The BiPAP s/t-d system is an assist ventilator intended to augment the breathing of spontaneous breathing pts suffering from respiratory failure, respiratory insufficiency, or obstructive sleep apnea. It is not intended to provide the total ventilatory requirements of the pt.

40 *529511 6/11/2004 Respironics, inc., BiPAP pro, bi-level-non-continuous Ventilator, 1012986, 1012986 hospitalization*

Bzd ***comment:***

Information received from the homecare provider that the pressures on the pt's device were not changing from ipap to epap. The prescribed settings were ipap=10cmh2o and epap=5cmh2o. The pt's family member reported to the homecare provider that their family member was opening their mouth during therapy, which was causing large leaks. The pt used a nasal mask with the device. it is reported the pt was hospitalized due to elevated co2 levels and required mechanical ventilation, however it is unknown if the device caused or contributed to the event. The BiPAP pro device is intended for treatment of sleep apnea.h6: the device was returned with the incorrect settings. Both the ipap and epap pressures were set to 5 cmh2o. This would cause the device to not cycle from ipap to epap and function as cpap. Incorrect settings on device.

© 2012 Koninklijke Philips Electronics N.V. All Rights Reserved

Questions? Contact FDA/CDRH/OCE/DID at CDRH-FOISTATUS@fda.hhs.gov or call 301-796-8118.

Records processed under FOIA Request #2015-1305; Released by CDRH on 05-11-2016.

41 *514377 3/5/2004 Respironics, inc., 332074 BiPAP s/t domestic home system, Non-continuous ventilator, 332074, 330274* *death*

Bzd ***comment:***

Patient's family member called Respironics in 2004 to report that the patient passed away while using a BiPAP system in 2003. They stated that the patient was using a BiPAP s/t with whisper swivel and connected to tubing. The tubing became disconnected at the whisper swivel while the device was still running. Follow up phone calls with the respiratory therapist indicated that the patient was using as nasal mask while receiving pressure support ventilation. The RT also indicated that device was privately purchased and not purchased through the homecare provider resulting in little patient interaction. The only contact was made through the purchasing of patient circuit accessories. The RT additionally stated they had no knowledge of the required device settings. The family controlled the device settings. The BiPAP s/t device is not intended for life support of life sustaining applications and is intended for spontaneously breathing patients.

42 *498806 11/15/200 Respironics, inc., profile lite a7034 nasal interface Mask, nasal mask, a7034, ** *required intervention*

Bzd ***comment:***

The device broke apart at the nose bridge while pt was using it during sleep. The jagged edge about 2 inches diagonally created an immediate hazard to possible puncturing their eye. Pt called the company and their response was that they had never heard any complaints and those they would not do anything for pt or about the issue. Secondly, pt has a second mask that they substituted. It is the same profile lite mask from Respironics. This week, pt noticed that the gel pad that rests on their forehead was leaking gel. Pt has complained to Respironics via their website, but no answer has been forthcoming. Pt strongly suspects that this company falsely represents its product and that it is a dangerous medical device for treatment of sleep apnea. The device is available only by prescription. Pt feels the way this device is engineered is not safe. A pt, like reporter, could be severely injured if they roll over while sleeping and the device breaks into a shard as their's did.

43 *4405261/29/2003Respironics, inc., BiPAP vision, ventilatory support System, BiPAP vision, ** *death*

Bzd ***comment:***

Approximately 1440 in 2003, dr. informed RT that pt needed bagging. When RT entered the room, dr. informed RT as RT began bagging that dr. found pt unresponsive and disconnected from the BiPAP. No audible alarms were noted upon discovery. dr., rn's and RT proceeded with resuscitation, including attempted synchronized cardioversion until pulse was restored and pt was placed on ventilator at approximately 1520. Pt spo2 ranged from 45% at beginning of resuscitation attempt, to 100% when placed on ventilator. Pt expired the next day.

44 *315265 2/9/2001 Respironics, inc., whisper swivel ii, exhalation port, *, 332113* *death*

Bzd ***comment:***

Received med watch from user facility stating that pt suffered cardiac arrest resulting in death possibly due to increasing paco2. Hospital was using the BiPAP unit invasively and configuring circuit for this use. The initial report received is that the hoh:3- device not returned to mfr. h.6-conclusions: failure to use device as specified in labeling. Labeling states that the BiPAP s/t-d system is intended for use with a Respironics, inc. approved pt circuit. A Respironics approved circuit consists of: an m

45 *307936 12/11/200 Respironics, inc., BiPAP s/t ventilatory support system, Non continuous ventilator, 552045, na* *death*

Bzd ***comment:***

Hospital reported that a device caught fire while being demonstrated and one pt has expired. A salesman was demonstrating the device in the hospital and the device was reported to have caught on fire. One pt has expired. Unit is currently being evaluated by engineering, but no

 © 2012 Koninklijke Philips Electronics N.V. All Rights Reserved

Questions? Contact FDA/CDRH/OCE/DID at CDRH-FOISTATUS@fda.hhs.gov or call 301-796-8118.

Records processed under FOIA Request #2015-1305; Released by CDRH on 05-11-2016.

conclusion can be made at this time concerning any malfunction. Info rec'd to date is unclear involving the circumstances with the incident or how the pt's death relates to the incident. Unit was being used in the hosp ICU. Oxygen was being bled into the pt circuit through a tee-connector at the outlet of the BiPAP. The hosp reported that the staff saw smoke come from the unit. note: user facility report not received parts a-f have been completed by the mfr. the unit was a demonstration unit left by a salesman to be used in the general ward of the hosp. the hosp was using the unit in the icu. They were not using an airway pressure alarm engineering lab investigation of the returned device could not determine the cause of the event or if the event was caused by the device. The complaint history was reviewed and no other events of this type have been reported on the BiPAP s/t-30. No corrective action planned at this time. Observations and conclusions: from the details of the event that have been made available, the following observations can be made: - oxygen was being administered at the distal end of the circuit rather than at the end proximal to the pt. - although the pt was placed on the device in icu setting, there is no indication that any alarms or monitors were in use. - No bacteria filter was in place at the device outlet port. - Details are incomplete on what other equipment, devices, or persons may have been alleged failure. - The cause of death of the pt was ruled by the institution to be the result of heart failure and not caused by the alleged failure of the device. After inspection, disassembly, investigation and engineering testing, not root cause for the failure of this device could be determined. Unit was being used in the hosp ICU. Oxygen was being bled into the pt circuit through a tee-connector at the outlet of the BiPAP. The hosp reported that the staff saw smoke come from the unit. The unit was a demonstration unit left by a salesman to be used in the general ward of the hosp. the hosp was using the unit in the ICU. They were not using an airway pressure alarm. The BiPAP 30 was a demonstration unit. Unit was being used in the hosp ICU. Oxygen was being bled into the pt circuit through a tee-connector at the outlet of the BiPAP. The hosp reported that the staff saw smoke come from the unit. There has been no additional info received from a healthcare professional or a hosp rep. per info received from the hosp, the cause of death was not related to the BiPAP unit. The cause of death reported was heart failure. You have requested additional info concerning the investigation and eval. The unit is currently being evaluated by Respironics engineers and should be completed within two weeks. At that time a follow-up report will be submitted and the investigation report will be sent to your attention. Conclusions could not be reached at the time the initial report was filed. This info will be related to you when the investigation has been completed and a second follow up med watch report will be sent. There was no remedial action taken except eval of the unit. The box was marked "other" to indicate than an eval/investigation was being performed. That info was inadvertently left off the initial report. Info received to date is as follows: the cause of death reported was heart failure. The hosp was using the unit in the ICU with o2 being bled in through the circuit. The BiPAP unit itself has no alarms and the hosp was not using an airway pressure alarm system although one is directed in the labeling.

46 *24519910/18/199 Respironics, inc., Respironics, positive airway pressure Machine, BiPAP s/t 332203, ** *death*

Bzd ***comment:***

Child was rooming in with mother in the pediatric intermediate intensive care unit in preparation for discharge. On trach collar during the day, connected to BiPAP during night time hours. Mother summoned help, claims BiPAP was disconnected from trach and

47 *231854 7/16/1999 Respironics, inc., BiPAP s/t ventilatory support system, Non continuous ventilator, 332074, 332074* *hospitalization*

Bzd ***comment:***

Father found son in arrest. Transported to hospital and placed on ventilator. Dealer returned subject for evaluation. Information received indicated device was in use in an infant for unknown reason. Infant became disconnected, and hospitalization alleged note: no user facility report received. Parts a-f completed by the manufacturer. The device was returned and evaluated. Device is operating normally. Device is intended for use on adult patients >30 kg. This appears to be a report of off-label use of devi

48 *569824 1/28/2005 Respironics, Inc. Hospital div., vision 285, BiPAP deathventilatory support machine, 285, **

Bzd ***comment:***

Pt admitted 12/04 with an acute exacerbation of interstitial pulmonary fibrosis. Complex medical history included coronary artery disease treated with CABG and pt was on coumadin therapy for paf. On admission treated with medication but respiratory status deteriorated and pt required noninvasive positive airway pressure ventilation. At time of event pt was alternating cpap and high flow oxygen via non breather mask as their condition slowly improved. Eight days later pt was on cpap via a vision 285 ventilatory support system. The alarm sounded and the machine stopped working. Initially the pt experienced no distress but quickly experienced oxygen desaturation (spo2 - 40's). The respiratory therapist checked the machine and the power source but was unable to restart the machine. The pt's status was dnr and no further measure were instituted and pt expired.

49 *286647 7/20/2000 sensor medics corporation, infant flow generator, Ncpap patient circuit, Na, 772181-101* *required intervention*

 © 2012 Koninklijke Philips Electronics N.V. All Rights Reserved

Questions? Contact FDA/CDRH/OCE/DID at CDRH-FOISTATUS@fda.hhs.gov or call 301-796-8118.

Records processed under FOIA Request #2015-1305; Released by CDRH on 05-11-2016.

Bzd **comment:**

While treating an infant with another mfr's infant flow system (the alladin), the nose generator supplied by sensor medics was reported to have come loose from one of the two rubber band hooks. The attachment hook was reported to have been flared out, exposing a sharp edge. The sharp edge caused a small cut on the infant's left eyelid and a scratch on the cornea. One suture was required to close the according to the user, the generator was not attached properly to the bonnet and there was probably too much tension applied to the straps and rubber bands. At sensormedics it was not possible to stretch the rubber bands without breaking, to cause the attachment hooks to deform enough to allow the rubber bands/straps to come loose.

50 *513650 2/27/2004 sensormedics corp., infant flow system, infant flow Nasal cpap, generators, 775705-101* *required intervention*

Bzd **comment:**

Pt on infant flow had an increase in respiratory distress. RT went to bedside and noticed nose prongs had come out of pt's nose. Pt was given another new nose prongs and placed on another infant flow generator with no pt compromise. Based upon the info collected, this is a mechanical situation involving a disposable in which the prongs were sealed. This could have resulted from an inclusion at prong interface as a result of mucus buildup or water droplets generated by the pt. item returned under rga #15413. But as of this date, co is unable to confirm the whereabouts of return disposable for evaluation.

51 *297335 9/22/2000 sensormedics corporation, infant flow generator, Ncpap patient circuit, Na, 772181-101* *required intervention*

Bzd **comment:**

While being treated with the infant flow system, the pt's movement apparently dislodged the left strap of the nasal generator and allowed the open plastic loop to slip down into pt's mouth and perforated the outer facial skin near the lip area from inside the mouth outward. The hospital staff extracted the generator and treated the performation in the facial skin with a steri-strip. No further medical intervention was necessary. While the customer refused to send the generator to sensormedics for analysis and eval, they did allow sensormedics to examine it in their facility. The examination of the plastic loop that caused the injury showed evidence of having been stressed and distorted. This may have occurred when the loop was cut off the patient, or when the generator was applied to the pt, or from pt activity.

52 *5153592/25/2004Siemens medical solutions, Siemens medical, ventilator, 300a, ** *required intervention*

Bzd **comment:**

Siemens ventilator, model 300a, began smoking from back of ventilator. Pulled from pt and trouble shot problem to defective l1 coil in air gas module. Have experienced this same problem a minimum of three other times. Understand that Siemens produced letter to owners in 11/2003, but desire manufacturer to take a harder stand on this issue.

53 *315217 2/8/2001 Sims portex inc., manual ventilator transport kit W/breathing b, manual ventilator, ref 385100, ** *required intervention*

Bzd **comment:**

Clinicians identified potential problems with design of device including tendency for manometer port to become clogged with blood or sputum and possible confusion regarding the function of exhalation

54 *505808 12/19/200 sunrise medical, devilbiss pulse dose oxygen Conserving device, oxygen conserving device, ex2005,* *hospitalization*

Bzd **comment:**

© 2012 Koninklijke Philips Electronics N.V. All Rights Reserved

Questions? Contact FDA/CDRH/OCE/DID at CDRH-FOISTATUS@fda.hhs.gov or call 301-796-8118.

Records processed under FOIA Request #2015-1305; Released by CDRH on 05-11-2016.

Pt was sitting in wheelchair near employee. Oxygen cylinder was empty and needed replacing. Employee obtained filled oxygen canister, brought in by empty canister. Removed flow meter from used canister and placed it on full canister. Turned valve to open oxygen-flames shot up. Employee placed cylinder on floor. Employee sustained burns to hands, arm and face. Pt was not injured. Unit was not returned to manufacturing but will be sent to a facility and manufacture will have represtantation at time for evaluation.

55 *279385 5/25/2000 sunrise medical/respiratory products division, required intervention*

devilbiss pulse dose oxygen conserving device,

Conserving device, ex2000d, ex2000d

Bzd ***comment:***

A caregiver in a nursing home was removing the pulse dose conserving device from the oxygen cylinder to which it was attached. Caregiver apparently did not properly shut off the flow of oxygen before removing the device. Apparently the force of the pressurized tank caused an undetermined object to fly into the air and strike the glasses. Caregiver's glasses broke and the eye sustained a minor injury.

56 *576785 3/1/2005 viasys respiratory care inc., infant flow system, nasal required intervention*

Cpap, m672p, 772183

Bzd ***comment:***

Rep called and has a generator that is cracked that was involved in an incident that was on a pt. the circuit would not hold pressure, but the rt's decided to use it anyway and increased the flow to 12 to maintain a pressure of 5. The pt was not doing well, and had to be reintubated, pt was extubated the next day and placed on another flow with a new circuit and did fine. Pt is sending back the generator under rga#17548 and will send replacement. The alleged faulty component of the pt circuit has not been returned for evaluation as of yet.h6: the viasys complaint coordinator/analysis evaluated the infant flow generator under a microscope and was unable to find any crack that could have caused the circuit to not maintain pressure. The customer was shipped a replacement component on replacement sales order #c-102295. No component and symptom trend has been identified and this event is considered to be an isolated incident. There are no corrective and/or preventative measures at present.3) the alleged faulty component (infant flow generator) which is a component of the pt circuit was visually examined under a microscope. This visual exam did not reveal any cracks or other abnormalities in this component that could have caused or contributed to the pt circuit not maintaining pressure. Since no physical abnormalities were seen during the visual exam, no other testing or analysis was performed.

57 *933737 10/15/200 FISHER & PAYKEL HEALTHCARE LTD, *, BTT, MR850, MR850 Required BTT Intervention*

Comment:

WE RECEIVED A MEDWATCH REPORT FROM A HOSP. THEY REPORTED THAT A PT RECEIVED A FIRST-DEGREE BURN IN THE FACIAL AREA. FACILITY FILED A MEDWATCH REPORT STATING A FIRST DEGREE FACIAL BURN AND INFORMED FISHER & PAYKEL HEALTHCARE. OUR SUBSEQUENT INVESTIGATION INTO THE EVENT WAS THROUGH DISCUSSIONS WITH FACILITY, AS THEY WOULD NOT RELEASE THE MR850 RESPIRATORY HUMIDIFIER IN QUESTION. THE BIOMEDICAL DEPT CHECKED THE MR850 AND VERIFIED THAT IT WAS OPERATING NORMALLY. THE DEVICE CONTINUES TO BE USED. THE MR850 CONTROLS TEMPERATURE TO THE PT AT 37 CELSIUS, AND PROTECTS AGAINST THERMAL OVERSHOOTS, LIMITING TEMPERATUE BELOW 41 CELSIUS, IN ACCORDANCE WITH THE MEDICAL HUMIDFIER STANDARD ISO 8185. THE PT WAS USING A NASAL CANNULA. A FACIAL BURN WOULD THEREFORE BE LIMITED TO THE NASAL AREA. A FIRST DEGREE BURN IS CONSIDERED A MINOR INJURY AND CHARACTERIZED BY REDNESS OF THE SKIN. HOWEVER, WITH NASAL CANNULAE IT IS NOT UNCOMMON FOR THE PRESSURE OF CONTACT TO INDUCE REDNESS. THE HUMIDIFIED GAS AT 37 CELSIUS MAY ALSO CONTRIBUTE TO REDNESS OF THE SKIN, PARTICULARY IN MORE SUSCEPTIBLE AREAS SUCH AS AROUND THE NARES OF THE NOSE. IT IS NOT UNREASONABLE TO MISINTERPRET THESE EFFECTS AS A FIRST DEGREE BURN. NO FURTHER INFO IS BEING SOUGHT AND THIS COMPLAINT IS NOW CONSIDERED CLOSED.

58 *1002627 2/27/2008 FISHER & PAYKEL HEALTHCARE, LTD., RESPIRATORY HUMIDIFIER, , , MR850 Death BTT*

Comment:

THE DEVICE HAS BEEN QUARANTINED BY THE HOSP. RESULTS: RESPIRONICS ESPRIT VENTILATOR. CONCLUSIONS: THE HOSP CONTINUED TO USE THE RT110 ADULT BREATHING CIRCUIT WITH THE RESPIRONICS ESPRIT VENTILATOR CONTRARY TO FISHER & PAYKEL HEALTHCARE RECOMMENDATIONS. WE A HOSP REPORTED TO OUR DIST THAT "ONE PT CODED AND EVENTUALLY EXPIRED" WHILST ON A RESPIRONICS ESPRIT VENTILATOR, FISHER & PAYKEL HEALTHCARE MR850 RESPIRATORY HUMIDIFIER AND THE RT110 ADULT BREATHING CIRCUIT. F/U INFO FROM THE HOSP INCLUDED: THE HOSP BEGA A HOSP REPORTED TO OUR DIST THAT "ONE PT CODED AND EVENTUALLY EXPIRED" WHILST ON A RESPIRONICS ESPRIT VENTILATOR, FISHER & PAYKEL HEALTHCARE MR850 RESPIRATORY HUMIDIFIER AND THE RT110 ADULT BREATHING CIRCUIT. F/U INFO FROM THE HOSP INCLUDED: THE HOSP BEGA

 © 2012 Koninklijke Philips Electronics N.V. All Rights Reserved

Questions? Contact FDA/CDRH/OCE/DID at CDRH-FOISTATUS@fda.hhs.gov or call 301-796-8118.

Records processed under FOIA Request #2015-1305; Released by CDRH on 05-11-2016.

59 *1001104 2/23/2008 FISHER & PAYKEL HEALTHCARE, LTD., RESPIRATORY HUMIDIFIER, , , MR730* *Required Intervention* *BTT*

Comment:

THE MR730 HUMIDIFIER IS TO BE RETURNED TO FISHER & PAYKEL HEALTHCARE FOR EVALUATION. THE INVESTIGATION IS IN PROGRESS. THE SERIOUSNESS OF THE BURN INJURY IS NOT YET KNOWN. AT THIS TIME WE ARE UNABLE TO MAKE ANY CONCLUSIONS ON THE DEVICE. THE MANUFACTURERA HOSPITAL REPORTED TO OUR DISTRIBUTOR THAT THE INSPIRATORY LIMB OF A CARDINAL HEALTH #7298-4S2 BREATHING CIRCUIT WAS ATTACHED TO A FISHER AND PAYKEL HEALTHCARE MR730 RESPIRATORY HUMIDIFIER AND THE CIRCUIT CAUGHT FIRE. THEY WERE PROVIDING HUMIDIFIED HIGH

60 *928089 10/11/200 FISHER & PAYKEL HEALTHCARE, LTD., REUSABLE INFANT TUBING, , 900MR593, 900MR593* *Required Intervention* *BTT*

Comment:

THIS REPORT WAS PREPARED BY REP. THE RETURNED DEVICE WAS VISUALLY INSPECTED. WE OBSERVED THAT THE TUBES HAD TEARS VISIBLE NEAR THE CUFFS AND ALONG THE TUBING. A ROOT CAUSE ANALYSIS HAS SHOWN THAT THE PROBABLE CAUSE OF THE TEARS IS EXCESSIVE FORCE AS A RESULT OF INCORRECT DISASSEMBLY OF THE CIRCUIT. CUSTOMERS ARE MOST LIKELY DISCONNECTING TUBES BY PULLING ON THE TUBE AND NOT THE CUFF. CONCLUSION: THE MALFUNCTION REPORTED WAS MOST LIKELY RELATED TO USER HANDLING. WE ARE AWARE OF OTHER SIMILAR COMPLAINTS REPORTING FAILURE OF THE CIRCUITS DUE TO TEARS IN THE TUBING. THE OCCURRENCE RATE OF THIS TYPE OF COMPLAINT IS APPROX 0.01% WORLDWIDE FOR THE LAST YEAR. WE WILL CONTINUE TO MONITOR AND TREND THESE COMPLAINTS. UNFORTUNATELY THIS REPORT WAS INADVERTENTLY OMITTED FORM THE RETROSPECTIVE SUMMARY REPORT 9611451-2007-00013. INVESTIGATION SUMMARY: ALL OF THE UNITS RECEIVED DUE TO TUBING LEAKS HAVE BEEN RETURNED TO FISHER & PAYKEL HEALTHCARE FOR FAILURE INVESTIGATIONS. A COMPLETE AND THOROUGH INVESTIGATION HAS BEEN CARRIED OUT TO DETERMINE THE ROOT CAUSE OF THE FAILURE. FOURTEEN OF THE RETURNED SAMPLES EXHIBITED SIGNS OF MILKING (WHITE MARKS) IN AREAS THAT CONNECTED THE TUBE TO THE CIRCUIT CONNECTOR. DURING TESTING IT WAS OBSERVED THAT THE AREAS WITH THE IDENTIFIABLE STRETCH MARKS HAD TEARS AROUND THE CUFF OF THE TUBE. A ROOT CAUSE ANALYSIS OF THIS PROBLEM WAS PERFORMED AND CONCLUDED THAT THE MAIN CONTRIBUTING FACTOR RESULTING IN FAILURE OF THE TUBING WAS EXCESSIVE FORCE AS A RESULT OF INCORRECT DISASSEMBLY OF THE CIRCUIT. FURTHER TESTING SHOWED THAT TO REPLICATE THE STRETCH MARKING/MILKING OF THE TUBING, THE USER WOULD HAVE TO PULL ON THE TUBE TO DETACH IT FROM THE VENTILATOR OR HUMIDIFIER, RATHER THAN HOLDING THE CONNECTOR WHEN DETACHING THE CIRCUIT. ALTHOUGH THE CIRCUIT TUBING IS RESILIENT TO DAMAGE, AND BY NATURE IS VERY DURABLE, THE MATERIAL PROPERTIES OF THE TUBING MEAN THAT IF EXCESSIVE FORCE IS USED THAT IT WILL EVENTUALLY TEAR, CAUSING A HOLE/LEAK.A HOSPITAL IN ANOTHER COUNTRY, REPORTED THA THERE WERE TEARS IN 900MR593 TUBING.

61 *887048 8/1/2007 FISHER & PAYKEL HEALTHCARE, LTD., , , MR730,* *Required Intervention* *BTT*

Comment:

THE COMPLAINT DEVICE WILL NOT BE RETURNED TO MFR. OUR REPRESENTATIVE IN ANOTHER COUNTRY WENT TO THE HOSPITAL TO CONDUCT AN INVESTIGATION. THE PERFORMANCE OF THE ACTUAL DEVICE WAS TESTED, AND A SERVICE HISTORY WAS OBTAINED. DETAILS OF THE SETUP WERE ALSO OBTAINED. RESULTS: THE MR730 HUMIDIFIER FUNCTIONED TO SPECIFICATIONS WHEN TESTED. IT IS LIKELY THAT THE SETTINGS USED WERE INCORRECT. WE WERE UNABLE TO ASCERTAIN, IF THERE WAS ANY MALFUNCTION WITH THE BREATHING CIRCUIT MANUFACTURED BY INTERSURGICAL. THE PB840 VENTILATOR ALARMED (SET PRESSURE ALARM WAS ABOUT 45 APPROX. CMH2O). THE MR730 DID NOT ALARM AT ANY STAGE. MFR HAD NOT VALIDATED THE COMPATIBILITY BETWEEN THE MR730 RESPIRATORY HUMIDIFIER, AND THE INTERSURGICAL BREATHING CIRCUIT. THE MR730 OPERATING MANUAL STATES THE FOLLOWING: "USE ONLY MFR APPROVED CHAMBERS, CIRCUITS AND ACCESSORIES. PERFORMANCE AND SAFETY CANNOT BE GUARANTEED IF OTHER TYPES OF ACCESSORIES ARE USED." CONCLUSIONS: THE MR730 RESPIRATORY HUMIDIFIER OPERATED ACCORDING TO SPECIFICATIONS. THIS IS AN UNUSUAL EVENT WITH A VERY LOW OCCURRENCE RATE. WE WILL CONTINUE TO MONITOR ALL COMPLAINTS FOR THIS TYPE OF INCIDENT.WE RECEIVED A REPORT CONCERNING A COMPLAINT THEY RECEIVED FROM A HOSPITAL. THE COMPLAINANT REPORTED THAT A PATIENT SUFFERED ANOXIA FOR A PERIOD OF 2 MINUTES, WITH A RISK OF DEATH. APPARENTLY THE PATIENT'S RESPIRATION STOPPED, WITH DECREASING SATURATION LEVELS, DUE TO AN OBSTRUCTION OF THE TRACHEOSTOMY CANULA BY MUCUS. THE REPLACEMENT OF THE CANULA APPARENTLY ALLOWED THE RESUMPTION OF VENTILATION. IN ADDITION, THE COMPLAINANT ALSO NOTED THAT OVER A 23 HOUR PERIOD OF VENTILATION, THE SYSTEM (FISHER & PAYKEL HEALTHCARE MR730 RESPIRATORY HUMIDIFIER AND INTERSURGICAL BREATHING CIRCUIT) USED 500 ML OF WATER INSTEAD OF THE USUAL 1000 ML.

62 *887049 8/1/2007 FISHER & PAYKEL HEALTHCARE, LTD., , , 900MR511S,* *Required Intervention* *BTT*

Comment:

THIS REPORT WAS PREPARED BY REP. METHOD: THE COMPLAINT DEVICE WILL NOT BE RETURNED FOR EVALUATION. OUR INVESTIGATION WAS CARRIED OUT BASED ON THE EVENT DESCRIPTION AND KNOWLEDGE OF THE PRODUCT. RESULTS: SKIN BURN IF A KNOWN CONSEQUENCE OF LEAVING A HEATED BREATHING CIRCUIT IN PROLONGED CONTACT WITH SKIN. IN THIS CASE, THE CAREGIVER PLACED THE BREATHING CIRCUIT ON THE PT'S SHOULDER FOR APPROX. TWO HOURS, AND DID NOT USE A SUPPORT ARM. OUR INSTRUCTIONS FOR USE INCLUDES THE FOLLOWING WARNING STATEMENT: "TO PREVENT THE POSSIBILITY OF PT BURNS, THE BREATHING CIRCUIT SHOULD NOT BE IN CONTACT WITH THE PT'S SKIN." CONCLUSION: USER ERROR CONTRIBUTED TO THE EVENT. THIS IS AN UNUSUAL EVENT. WE WILL BE FOLLOWING UP WITH THE COMPLAINANT TO REITERATE THE IMPORTANCE OF KEEPING THE HEATED BREATHING CIRCUIT AWAY FROM THE PT'S SKIN.A HOSPITAL IN ANOTHER COUNTRY, REPORTED TO A MARQUET DISTRIBUTOR THAT A PT WAS BURNT WITH BLISTERS TWO

© 2012 Koninklijke Philips Electronics N.V. All Rights Reserved

Questions? Contact FDA/CDRH/OCE/DID at CDRH-FOISTATUS@fda.hhs.gov or call 301-796-8118.

Records processed under FOIA Request #2015-1305; Released by CDRH on 05-11-2016.

HOURS AFTER A HEATED BREATHING CIRCUIT WAS PLACED ON THE PT'S SHOULDER. THEY ALLEGED THAT THEY DID NOT USE A SUPPORT ARM TO HOLD THE BREATHING CIRCUIT AS THE BREATHING CIRCUIT CAN OFTEN BE PULLED OUT WHEN THE PT MOVES.

63 *8830247/23/2007FISHER & PAYKEL HEALTHCARE, LTD., , , RT329, RT329* *Required Intervention* *BTT*

Comment:

METHOD: AN INITIAL EVALUATION WAS CARRIED OUT BASED ON THE EVENT DESCRIPTION AND PREVIOUS COMPLAINTS. WE WILL COMPLETE OUR INVESTIGATION UPON RECEIPT OF THE COMPLAINT DEVICE. RESULTS: THIS IS A KNOWN PROBLEM WITH A LOW OCCURRENCE RATE. THE PRESSURE/MANOMETER PORT IS PACKAGED WITH THE CAP IN PLACE, THOUGH THE CAP IS KNOWN TO DISLODGE OR BECOME LOOSE DURING TRANSPORT. THE FOLLOWING STATEMENTS ARE PRESENT IN THE RT329 INSTRUCTIONS FOR USE: "CHECK THAT ALL CONNECTIONS. CAPS AND/OR PLUGS ARE TIGHT BEFORE USE." "PERFORM A PRESSURE AND LEAK TEST ON THE BREATHING SYSTEM AND CHECK FOR OCCLUSIONS BEFORE CONNECTING TO A PATIENT." CONCLUSIONS: WE CANNOT MAKE A CONCLUSION ON THIS AT PRESENT. HOWEVER, WE WILL BE REITERATING TO THE COMPLAINANT THE IMPORTANCE OF CHECKING FOR LOOSE CONNECTIONS IN BREATHING CIRCUITS AND ACCESSORIES PRIOR TO USE.A HOSPITAL REPORTED, TO OUR DISTRIBUTOR THAT AN INFANT PATIENT DETERIORATED WHILE ON AN RT329 INFANT BREATHING CIRCUIT AND NASAL CANNULA AT A GAS FLOW OF 3-4 L/MINUTE. WHEN THE NEONATOLOGIST FELT AROUND THE NASAL CANNULA, HE COULD NOT FEEL GAS FLOW. STAFF MEMBERS REPORTEDLY CARED FOR THE PATIENT, THEN CHECKED THE SYSTEM. THEY APPARENTLY DID NOT FEEL ANY GAS FLOW AFTER CHECKING FOR LEAKS, PROBE OUTS, OPEN PORTS, ETC. ADDITIONALLY, THE COMPLAINANT STATED THAT THE POP OFF VALVE UNIT INSIDE THE RT329 KIT IS PACKAGED WITH AN OPEN MANOMETER PORT CAUSING A LEAK WHEN USED. THEY STATED THAT THE OPEN PORT WAS NOT NOTICED UNTIL THE MR850 HEATER ALARMED. THE ALARM STOPPED ONCE THE PORT WAS CAPPED (WITH THE PROVIDED CAP).

64 *881912 7/18/2007 FISHER & PAYKEL HEALTHCARE, LTD., , , MR290, MR290* *Required Intervention* *BTT*

Comment:

METHODS - NO INFORMATION TO DATE. RESULTS-INVESTIGATION STILL UNDERWAY, NO RESULTS TO DATE. CONCLUSIONS-NO CONCLUSION CAN BE MADE AT THIS TIME.A HOSPITAL REPORTED THAT AN CHAMBER FAILED WHILE BEING USED ON AN INFANT-NO ALARM SOUNDED AND THE CIRCUIT AND CANNULA FILLED WITH WATER. THE HOSPITAL REPORTED THAT IT TOOK APPROX 1-2 MINUTES FOR THE WATER TO FILL INTO THE PATIENT LINE. THE FORTY-THREE WEEK OLD BABY REPORTEDLY WENT INTO RESPIRATORY DISTRESS AND HAD TO BE INTUBATED. IT WAS ALSO ALLEGED THAT THE FEEDSET INTO THE CHAMBER DID NOT LOOK NORMAL.

65 *864938 6/15/2007 FISHER & PAYKEL HEALTHCARE, LTD., , BTT, MR730,* *Required Intervention* *BTT*

Comment:

THE COMPLAINT DEVICE WAS SENT TO FISHER & PAYKEL HEALTHCARE, IT WILL NOT BE RETURNED TO FISHER & PAYKEL HEALTHCARE. METHOD: THE ACTUAL DEVICE WAS EVALUATED BY OUR SERVICE DEPARTMENT. RESULTS: THE RETURNED DEVICE WAS SET TO NON-HEATERWIRE MODE WHEN RECEIVED. IT WAS FULLY TESTED, AND WAS FOUND TO OPERATE CORRECTLY. THE TEMPERATURE READINGS REPORTED WERE WITHIN SPEC. SINCE A HEATED BREATHING CIRCUIT WAS USED, THE HUMIDIFIER SHOULD HAVE BEEN SET TO HEATERWIRE MODE. WE ARE UNSURE WHETHER THIS ERROR WOULD HAVE CAUSED THE REPORTED PT'S SYMPTOMS. IN ADDITION, THE INTERSURGICAL NEONATAL BREATHING CIRCUIT IS NOT APPROVED BY FISHER &U PAYKEL HEALTHCARE FOR USE IN CONJUNCTION WITH THE MR730 RESPIRATORY HUMIDIFIER. THE MR730 OPERATING MANUAL STATES "USE ONLY FISHER & PAYKEL APPROVED CHAMBERS, CIRCUITS AND ACCESSORIES. PERFORMANCE AND SAFETY CANNOT BE GUARANTEED IF OTHER TYPES OF ACCESSORIES ARE USED." CONCLUSIONS: THERE WAS NO FAULT FOUND WITH THE MR730 RESPIRATORY HUMIDIFIER. THE WRONG SETTING WAS APPARENTLY APPLIED BY THE USER. WE COULD NOT ASCERTAIN WHETHER THIS DIRECTLY CONTRIBUTED TO THE PATIENT'S CONDITION.

WE RECEIVED A REPORT FROM AFSSAPS, STATING THAT A HOSP HAD REPORTED THAT A PRETERM BABY SUFFERED HYPERTHERMIA AND TACHYCARDIA DURING NASAL VENTILATION WHERE A FISHER & PAYKEL HEALTHCARE MR730 RESPIRATORY HUMIDIFIER WAS IN USE. THE BREATHING CIRCUIT USED IN CONJUNCTION WITH THE HUMIDIFIER WAS REPORTEDLY A HEATED NEONATAL BREATHING CIRCUIT MANUFACTURED BY INTERSURGICAL. THE USERS REPORTEDLY NOTICED AN ABNORMAL QUANTITY OF WATER IN THE BREATHING CIRCUIT AND A HIGH TEMPERATURE OUT OF THE CHAMBER (55 DEGREES C) AND 35 DEGREES C AT THE Y PIECE. APPARENTLY, THE HYPERTHERMIA AND TACHYCARDIA REGRESSED ONCE THE RESPIRATORY HUMIDIFIER WAS CHANGED.

66 *864009 6/13/2007 FISHER & PAYKEL HEALTHCARE, LTD., AUTOFEED HUMIDIFICATION CHAMBER, , , MR290* *Required Intervention* *BTT*

Comment:

AN ASSESSMENT WAS MADE ON THE EVENT DESCRIPTION ADN PREVIOUS INVESTIGATIONS. RESULTS- OUR RECORDS INDICATE THAT THIS IS THE ONLY COMPLAINT OF THIS NATURE FOR THE GIVEN LOT NUMBER. CONCLUSIONS- BASED ON SIMILAR COMPLAINTS RECEIVED PREVIOUSLY, THE DEVICE MOA HOSPITAL REPORTED THAT AN MR290 AUTOFEED HUMIDIFICATION CHAMBER OVERFILLED, THE SHUTOFF FLOATS FAILED. THIS ALLOWED WATER TO FILL UP INTO THE PT CIRCUIT. THE INFANT PT REPORTEDLY DE-SATURATED AND WENT INTO BRADYCARDIA.

67 *972296 5/4/2007 FISHER & PAYKEL HEALTHCARE, LTD., HUMIDIFICATION*

© 2012 Koninklijke Philips Electronics N.V. All Rights Reserved

Questions? Contact FDA/CDRH/OCE/DID at CDRH-FOISTATUS@fda.hhs.gov or call 301-796-8118.

Records processed under FOIA Request #2015-1305; Released by CDRH on 05-11-2016.

Required BTT

CHAMBER, DTT, , MR290 *Intervention*

Comment:

THE HOSPITAL REPORTED TO US THAT THE MR290 HUMIDIFICATION AUTOFEED CHAMBER FLOATS FAILED. WATER ENTERED BABY'S NOSE, THE BABY WAS LOVAGED AND NO HARM WAS REPORTED.METHOD - AN ASSESSMENT WAS MADE ON THE EVENT DESCRIPTION AND THE TWO SUPPLIED IMAGES. RESULTS - BASED ON SIMILAR COMPLAINTS REC'D PREVIOUSLY, THE DEVICE MOST LIKELY SUSTAINED IMPACT DUE TO BEING DROPPED. PRIOR TOUSE. CONCLUSIONS - THE MALFUNCITON REPORTE

68 *842511 4/26/2007 FISHER & PAYKEL HEALTHCARE, LTD., INFANT CONTINUOUS FLOW BREATHING CIRCUIT KIT, BTT, RT329, RT329* *Required Intervention BTT*

Comment:

A HOSP IN A FOREIGN REPORTED TO A FISHER & PAYKEL HEALTHCARE REP THAT A PT BECAME DESATURATED (DESPITE INCREASING THE FLOW RATE), WHILE ON AN RT329 INFANT BREATHING CIRCUIT. THE FISHER & PAYKEL HEALTHCARE REP EXAMINED THE RT329 INFANT BREATHING CIRCUIT AND COULD NOT DETERMINE IF THERE WAS POSSIBLY A LEAK LOCATED ANYWHERE ON THE SET-UP. THE HOSP RESUMED TREATMENT, BUT ON NON-HUMIDIFIED OXYGEN AND THE PT RESATURATED.THE DEVICE IS IN THE PROCESS OF BEING DECONTAMINATED. THE ACTUAL DEVICE INVOLVED IN INCIDENT WILL BE EVALUATED. INVESTIGATION STILL UNDERWAY, NO RESULTS TO DATE. NO CONCLUSION CAN BE MADE AT THIS TIME.

69 *818581 2/21/2007 FISHER & PAYKEL HEALTHCARE, LTD., RESPIRATORY HUMIDIFIER, BTT, HC500, HC500* *Death BTT*

Comment:

A HOME HEALTHCARE PROVIDER PROVIDED A LAWYER'S LETTER FROM A PATIENT'S FAMILY ALLEGING THAT A HC500 RESPIRATORY HUMIDIFIER WAS DEFECTIVE AND THAT THE PATIENT'S FAMILY BELIEVES THAT THE USE OF THE HC500 RESPIRATORY HUMIDIFIER RESULTED IN THE DEATH OF THE CHILD. THE CHILD HAD BEEN IN THE HOSPITAL FOR A PERIOD AS SHE SUFFERED SEVERE BIRTH DEFECTS, BUT HAS BEEN SENT HOME WITH A TERMINAL DIAGNOSIS "TO DIE" AS SHE WAS IN END STAGE" AND HAD A "FEW DAYS TO LIVE." IT WAS REPORTED THAT THE HC500 RESPIRATORY HUMIDIFIER WAS IN USE WHEN THE CHILD DIED. THE HC500 RESPIRATORY HUMIDIFIER WAS SET UP THE DAY BEFORE THE PATIENT WAS RELEASED FROM THE HOSPITAL BY THE HOSPITAL'S RESPIRATORY DEPARTMENT TO ENSURE THAT IT WAS WORKING PROPERLY AND IT FUNCTIONED PROPERLY AT THE HOSPITAL. THE HC500 RESPIRATORY HUMIDIFIER WAS SET UP BY THE HOME HEALTHCARE PROVIDER AT THE PATIENT'S HOME.METHODS - NO INFORMATION TO DATE. RESULTS - INVESTIGATION STILL UNDERWAY, NO RESULTS TO DATE. CONCLUSIONS - NO CONCLUSION CAN BE MADE AT THIS TIME. THE DEVICE IS STILL IN THE POSSESSION OF THE PATIENT'S FAMILY. SEVERAL REQUESTS AND ATTEMPTS HAVE BEEN MADE TO OBTAIN THE HC500 FOR TESTING, BUT TO DATE, THE FAMILY HAS NOT BEEN WILLING TO RELEASE THE PRODUCT.

70 *997578 2/13/2008 FISHER PAYKEL, FISHER PAYKEL, HUMIDIFIER HEATER, ,* *Required Intervention BTT*

Comment:

EVENT: RESPIRATORY THERAPIST WAS RETURNING INFANT FROM PARENT TO ISOLETTE. HEARD SPARK, SAW IGNITION OF BREATHING CIRCUIT ATTACHED TO FISHER PAYKEL HEATER HUMIDIFIER. ACTION TAKEN: EXTINGUISHED FLAME, UNPLUGGED HEATER, AND DISCONNECTED OXYGEN SOURCE. MOVE

71 *978454 1/9/2008 FISHER PAYKEL, FISHER - PAYKEL, HOSPITAL FULL FACE MASK, , RT 040L* *Required Intervention BTT*

Comment:

UNDER THE CHIN MASK PLACEMENT IS CONSIDERED A POSITIVE ATTRIBUTE BY THE MFR. THIS DESIGN MAYBE A DETRIMENT TO PTS DUE TO THIS FIXATION POINT CREATES A UP AND DOWN SAWING MOTION ON THE BRIDGE OF THE NOSE WHENEVER THE PT TALKS OR OPENS THEIR MOUTH. IN THE F

72 *823152 3/2/2007 KING SYSTEMS CORP., HME BOOSTER, HEATER, MSB-600, MSB-600* *Required Intervention BTT*

Comment:

THE USER-FACILITIE REPORTED: PT HAS RECEIVED A BURN ON HIS LEFT FOREARM WE THINK THE BURN CAME FROM A FAULTY HME BOOSTER THAT WAS INLINE WITH HIS VENTILATOR CIRCUIT. PT HAD BLISTERS ON HIS LEFT FOREARM. EVALUATION SUMMARY: KING SYSTEMS AND MEDISIZES HAVE DETERMINED THAT THIS TYPE OF EVENT CAN HAPPEN IF WATER LEAKS INTO THE BACKSIDE OF THE HEATER ELEMENT. THIS LEAKAGE CAN OCCUR IF THE USER DOES NOT FOLLOW THE INSTRUCTIONS FOR USE, WHICH IS INCLUDED WITH THE DEVICE. SPECIALLY: TURN OFF THE WATER FEED SET BEFORE REMOVING THE HEATING ELEMENT FROM THE T-PIECE. ALWAYS USE THE FLOW REGULATOR TO LIMIT THE WATER AVAILABLE TO 10 ML PER HOUR. WHEN IN USE, POSITION THE HEATER CORD BELOW THE HORIZONTAL PLANE. POSITION THE WATER FEED SET SO THAT THE LINE DOES NOT CROSS THE ELECTRICAL COMPONENTS. CHECK IF THE O-RING ON THE HEATER IS IN GOOD CONDITION. NEVER IMMERSE THE HME-BOOSTER HEATER IN LIQUID.

73 *973669 12/27/200 RESPIRONICS, M SERIES, HEATED HUMIDIFIER, ,* *Disability BTT*

Comment:

© 2012 Koninklijke Philips Electronics N.V. All Rights Reserved

Questions? Contact FDA/CDRH/OCE/DID at CDRH-FOISTATUS@fda.hhs.gov or call 301-796-8118.

Records processed under FOIA Request #2015-1305; Released by CDRH on 05-11-2016.

HEATED HUMIDIFIER CHAMBER LEAKED WATER INTO UNIT SHUTTING IT DOWN MAKING IT INOPERABLE.

74 *973670 12/27/200 RESPIRONICS, M SERIES, HEATED HUMIDIFIER, , Disability BTT*

Comment:

HEATED HUMIDIFIER CHAMBER LEAKED WATER AND RESULTED IN UNIT SHUTTING DOWN.

75 *973672 12/27/200 RESPIRONICS, M SERIES HUMIDIFIER, HEATED HUMIDIFIER, , Disability BTT*

Comment:

HEATED HUMIDIFIER CHAMBER LEAKED WATER INTO UNIT; UNIT SHUT DOWN.

76 *935334 10/24/200 RESPIRONICS, M SERIES, HEATED HUMIDIFER, 1022334, Disability BTT*

Comment:

HEATED HUMIDIFIER LEAKED DURING OPERATION DAMAGING PATIENT'S END TABLE. AFTERWARDS, UNIT BLINKS CONTINUOUSLY AND HEATER PLATE DOES NOT HEAT. NO PATIENT HARM REPORTED.

77 *926135 10/8/2007 RESPIRONICS, M SERIES, HEATED HUMIDIFIER, 1022234, Required Intervention BTT*

Comment:

PATIENT CALLED OFFICE TO REPORT THAT THE HEATED HUMIDIFIER LEAKED WATER AND NOW THE DEVICE DOES NOT WORK. PATIENT WAS GIVEN A NEW HEATED HUMIDIFIER, AND A RGA WAS OBTAINED BY OPERATION MGR AND RETURNED TO MFR.

78 *926185 10/5/2007 RESPIRONICS, REMSTAR PRO M-SERIES HEATED HUMIDIFIER DOM, C-PAP, 1022334, Life Threatening BTT*

Comment:

IN 2007, I HAVE BEEN USING A C-PAP MACHINE FOR SEVERAL YEARS. I RECEIVED A NEW ONE ON APPROX TWO MONTHS EARLIER. THIS MORNING AROUND 5:45 AM, I WAS AWAKENED BY THE STRONG SMELL OF SMOKE. I TOOK OFF MY C-PAP MASK AND SAT UP IN BED. I COULD NO LONGER SMELL THE SMOKE. I PUT THE MASK BACK ON THE STRONG SMELL RETURNED. IT WAS COMING FROM MY C-PAP MACHINE. I HAVE NO IDEA HOW LONG I WAS BREATHING THE SMOKE BEFORE I AWOKE. I HAVE HAD COUGHING SPELLS EVER SINCE. I DID USE MY INHALER AROUND 7 AM, AND AGAIN AT 10 AM TO HELP MY COUGHING AND DIFFICULTY IN BREATHING. I SEEMS TO HAVE HELPED. THE MACHINE IS A: RESPIRONICS REMSTARPRO M SERIES, MODEL #400 M, REMSTAR/BIPAP; M-SERIES HEATED HUMIDIFIER DOM MODEL #1022334. DATES OF USE: APPROX TWO AND A HALF MONTHS IN 2007. DIAGNOSIS OR REASON FOR USE: SLEEP APNEA.

79 *920911 9/25/2007 RESPIRONICS, M SERIES REMSTAR, HEATED HUMIDIFIER, Required Intervention BTT*

Comment:

CPAP USER REPORTED THAT HUMIDIFIER CHAMBER/UNIT LEAKED WATER ONTO TABLE.

© 2012 Koninklijke Philips Electronics N.V. All Rights Reserved

Questions? Contact FDA/CDRH/OCE/DID at CDRH-FOISTATUS@fda.hhs.gov or call 301-796-8118.

Records processed under FOIA Request #2015-1305; Released by CDRH on 05-11-2016.

3. Complaint Summary Table

(b)(4) Complaint Summary Table

[redacted]

Questions? Contact FDA/CDRH/OCE/DID at CDRH-FOISTATUS@fda.hhs.gov or call 301-796-8118.

(b)(4) Complaint Summary Table

(b)(4) Complaint Summary Table

(b)(4) Complaint Summary Table

(b)(4) Complaint Summary Table

(b)(4) Complaint Summary Table

(b)(4) Complaint Summary Table

(b)(4) Complaint Summary Table

(b)(4) Complaint Summary Table

(b)(4) Complaint Summary Table

(b)(4) Complaint Summary Table

(b)(4) Complaint Summary Table

(b)(4) Complaint Summary Table

(b)(4) Complaint Summary Table

(b)(4) Complaint Summary Table

(b)(4) Complaint Summary Table

(b)(4) Complaint Summary Table

(b)(4) Complaint Summary Table

(b)(4) Complaint Summary Table

(b)(4) Complaint Summary Table

(b)(4) Complaint Summary Table

(b)(4) Complaint Summary Table

(b)(4) Complaint Summary Table

(b)(4) Complaint Summary Table

(b)(4) Complaint Summary Table

(b)(4) Complaint Summary Table

Records processed under FOIA Request #2015-1305; Released by CDRH on 05-11-2016.

4. Conclusion

Note: The conclusion provided below is unchanged from what was submitted in the initial Request for Additional Information (#1) provided to the FDA for K120308 and which is also included in this submission under Tab 10.

A MAUDE database search was conducted using the product codes BZD (ventilator, non-continuous (respirator)) and BTT (humidifier, respiratory gas, (direct patient interface)). BZD is included in the search to find adverse event reports which could be related to the use of CPAP devices and BTT is used to capture humidifier related adverse events that may be applicable to the humidifier accessory.

After the initial report is generated, the BZD results are sorted in order to identify those hazards that are specifically related to CPAP devices of the same or similar intended use. There are several different product types which appear under the BZD product code which do not meet this criteria including oxygen conserving devices, masks, and CPAP devices that are intended for patient populations outside of those that are part of the REMstar SE's intended use (Example: non-continuous ventilators intended specifically for infant use).

The sorted information was then compared against those hazards/risks that are currently identified in the REMstar SE risk analysis. The result of this comparison was that no new hazards/risks were identified which were not already captured.

© 2013 Koninklijke Philips Electronics N.V. All Rights Reserved

Questions? Contact FDA/CDRH/OCE/DID at CDRH-FOISTATUS@fda.hhs.gov or call 301-796-8118.

Records processed under FOIA Request #2015-1305; Released by CDRH on 05-11-2016.

Tab 10

Additional Information Request (b)(4) [redacted]

This section includes our responses to all three FDA Reviewer's requests for additional information (b)(4) [redacted]

Note: The initial Request for Additional Information (identified as #1 below) includes responses to questions pertaining to more than just the material modification which is the subject of this submission. This additional information was left in the document only for the purpose of keeping it unmodified from what was sent to the FDA. After the initial Request for Additional Information, all remaining correspondence (identified as #2 and #3 below) with the FDA was related solely to the material modification.

The documents that comprise the three additional information requests are listed below and are provided in the pages that follow this section cover sheet.

- Response to Request for Additional Information #1
  FDA Request for Additional Information received on 03-02-2012
  Response sent to FDA on 03-21-2012
  (27 pages)

- Response to Request for Additional Information #2
  FDA Request for Additional Information received on 04-19-2012
  Response sent to FDA on 06-18-2012
  (11 pages including appendix)

- Response to Request for Additional Information #3
  FDA Request for Additional Information received on 07-16-2012
  Response sent to FDA on which was sent to FDA on 07-18-2012
  (10 pages including appendix)

(Please turn the page)

© 2013 Koninklijke Philips Electronics N.V. All Rights Reserved
Questions? Contact FDA/CDRH/OCE/DID at CDRH-FOISTATUS@fda.hhs.gov or call 301-796-8118.

Records processed under FOIA Request #2015-1305; Released by CDRH on 05-11-2016.

Response to Request for Additional Information #1

27 pages
FDA Request for Additional Information was dated 03-02-2012

(Please turn the page)

© 2013 Koninklijke Philips Electronics N.V. All Rights Reserved
Questions? Contact FDA/CDRH/OCE/DID at CDRH-FOISTATUS@fda.hhs.gov or call 301-796-8118.

Records processed under FOIA Request #2015-1305; Released by CDRH on 05-11-2016.

Special 510(k): Device Modification

21 March 2012

Philips Respironics
1001 Murry Ridge Lane
Murrysville, PA, 15668

U.S. Food and Drug Administration
Center for Devices and Radiological Health
Document Mail Center - WO66-G609
10903 New Hampshire Avenue
Silver Spring, MD 20993-0002

Reference: K120308 REMstar SE – Additional Information Request

Dear Madam/Sir:

Respironics Inc. hereby submits the following supplemental information for the **Special 510(k): Device Modification** currently being reviewed under K120308 (REMstar SE). This information is in response to the FDA Request for Additional Information dated March 2, 2012 from Amy LeVelle (Phone: 301-796-6963; Email: Amy.LeVelle@fda.hhs.gov).

We consider our intent to market this device as confidential commercial information and request that it be treated as such by the FDA. We have taken precautions to protect the confidentiality of the intent to market this device. We understand that the submission to the government of false information is prohibited by 18 U.S.C. 1001 and 21 U.S.C. 331(q).

Thank you in advance for your consideration of our application and your acceptance of this supplemental information. If there are any questions, please fee to contact me at (724) 387-4134 or by email at Frank.Kadi@philips.com.

Sincerely,

Frank Kadi
Senior Regulatory Affairs Engineer

Questions? Contact FDA/CDRH/OCE/DID at CDRH-FOISTATUS@fda.hhs.gov or call 301-796-8118.

Records processed under FOIA Request #2015-1305; Released by CDRH on 05-11-2016.

Response to Additional Information Request Dated 03-02-2012

REMstar SE (K120308)

Note(s):

- Each FDA Request for Additional Information is highlighted in blue with the associated response following immediately after.

© 2012 Koninklijke Philips Electronics N.V. All Rights Reserved
Questions? Contact FDA/CDRH/OCE/DID at CDRH-FOISTATUS@fda.hhs.gov or call 301-796-8118.

(b)(4) Responses to FDA Additional Information

(b)(4) Responses to FDA Additional Information

(b)(4) Responses to FDA Additional Information

(b)(4) Responses to FDA Additional Information

(b)(4) Responses to FDA Additional Information

(b)(4) Responses to FDA Additional Information

(b)(4) Responses to FDA Additional Information

(b)(4) Responses to FDA Additional Information

(b)(4) Responses to FDA Additional Information

(b)(4) Responses to FDA Additional Information

(b)(4) Responses to FDA Additional Information

(b)(4) Responses to FDA Additional Information

(b)(4) Responses to FDA Additional Information

(b)(4) Responses to FDA Additional Information

(b)(4) Responses to FDA Additional Information

(b)(4) Responses to FDA Additional Information

(b)(4) Responses to FDA Additional Information

(b)(4) Responses to FDA Additional Information

(b)(4) Responses to FDA Additional Information

(b)(4) Responses to FDA Additional Information

(b)(4) Responses to FDA Additional Information

(b)(4) Responses to FDA Additional Information

(b)(4) Responses to FDA Additional Information

(b)(4) Responses to FDA Additional Information

(b)(4) Responses to FDA Additional Information

(b)(4) Responses to FDA Additional Information

(b)(4) Responses to FDA Additional Information

(b)(4) Responses to FDA Additional Information

(b)(4) Responses to FDA Additional Information

(b)(4) Responses to FDA Additional Information

(b)(4) Responses to FDA Additional Information

(b)(4) Responses to FDA Additional Information

(b)(4) Responses to FDA Additional Information

(b)(4) Responses to FDA Additional Information

(b)(4) Responses to FDA Additional Information

(b)(4) Responses to FDA Additional Information

(b)(4) Responses to FDA Additional Information

(b)(4) Responses to FDA Additional Information

(b)(4) Responses to FDA Additional Information

(b)(4) Responses to FDA Additional Information

(b)(4) Responses to FDA Additional Information

(b)(4) Responses to FDA Additional Information

(b)(4) Responses to FDA Additional Information

(b)(4) Responses to FDA Additional Information

(b)(4) Responses to FDA Additional Information

(b)(4) Responses to FDA Additional Information

(b)(4) Responses to FDA Additional Information

(b)(4) Responses to FDA Additional Information

Records processed under FOIA Request #2015-1305; Released by CDRH on 05-11-2016.

* * * COMMUNICATION RESULT REPORT (MAY. 22. 2013 1:24PM) * * *

FAX HEADER 1:
FAX HEADER 2:

TRANSMITTED/STORED : MAY. 22. 2013 1:22PM

FILE MODE	OPTION	ADDRESS	RESULT	PAGE
5125 MEMORY TX		724-387-7490	OK	3/3

REASON FOR ERROR
E-1) HANG UP OR LINE FAIL
E-2) BUSY
E-3) NO ANSWER
E-4) NO FACSIMILE CONNECTION

DEPARTMENT OF HEALTH & HUMAN SERVICES

Public Health Service

Food and Drug Administration
10903 New Hampshire Avenue
Document Control Center – WO66-G609
Silver Spring, MD 20993-0002

May 21, 2013

Mr. Frank Kadi
Senior Regulatory Affairs Engineer
Respironics, Incorporated
1740 Golden Mile Highway
MONROEVILLE PA 15146

Re: K130077
Trade/Device Name: REMstar SE
Regulation Number: 21 CFR 868.5905
Regulation Name: Noncontinuous Ventilator
Regulatory Class: II
Product Code: BZD
Dated: April 24, 2013
Received: April 25, 2013

Dear Mr. Kadi:

We have reviewed your Section 510(k) premarket notification of intent to market the device referenced above and have determined the device is substantially equivalent (for the indications for use stated in the enclosure) to legally marketed predicate devices marketed in interstate commerce prior to May 28, 1976, the enactment date of the Medical Device Amendments, or to devices that have been reclassified in accordance with the provisions of the Federal Food, Drug, and Cosmetic Act (Act) that do not require approval of a premarket approval application (PMA). You may, therefore, market the device, subject to the general controls provisions of the Act. The general controls provisions of the Act include requirements for annual registration, listing of devices, good manufacturing practice, labeling, and prohibitions against misbranding and adulteration. Please note: CDRH does not evaluate information related to contract liability warranties. We remind you, however, that device labeling must be truthful and not misleading.

If your device is classified (see above) into either class II (Special Controls) or class III (PMA), it may be subject to additional controls. Existing major regulations affecting your device can be found in the Code of Federal Regulations, Title 21, Parts 800 to 898. In addition, FDA may publish further announcements concerning your device in the Federal Register.

Records processed under FOIA Request #2015-1305; Released by CDRH on 05-11-2016.

DEPARTMENT OF HEALTH AND HUMAN SERVICES **MEMORANDUM**

Food and Drug Administration
Office of Device Evaluation
9200 Corporate Boulevard
Rockville, MD 20850

Premarket Notification [510(k)] Review
Traditional

K130077

Date: 5/15/13
To: The Record
From: Amy LeVelle

Office: ODE
Division: DAGRID/RPDB

510(k) Holder: Respironics, Inc.
Device Name: Remstar SE
Contact: Frank Kadi
Phone: 724-387-4134
Fax: 724-387-7490
Email: Frank.Kadi@philips.com

I. Purpose and Submission Summary

This was originally submitted as a special 510(k) and has been converted to a traditional based on the change in material formulation introducing new technological characteristics. The submission was considered Refuse to Accept (RTA). Complete test reports for the extraction studies relied upon in the original submission were requested. The sponsor was informed during the RTA and conversion of their 510(k) that providing extraction studies in lieu of complete biocompatibility tests is not a traditionally accepted means of establishing biocompatibility and would need to be reviewed thoroughly by the Agency. The sponsor contacted me to notify me that they also had the complete biocompatibility tests per ISO 10993. They proposed that they submit these rather than the extraction studies in order to use a more traditional means for establishing biocompatibility of their device. I agreed to this request, as the biocompatibility tests would be preferred. The sponsor has subsequently provided these test reports and the submission was accepted for review.

The only change compared to the predicate device (K122769) is for a modification to the material formulation (b)(4)
(b)(4)

Substantive Interaction (4/12/2013)
The sponsor should provide additional justification for their test methods and sample preparation for the biocompatibility tests conducted. They should also justify the results of the implantation testing.

Final Decision (5/15/2013)
The sponsor has adequately addressed all of the previous deficiencies. The changes to the materials do not alter the intended use of the device or introduce any new types of safety or effectiveness questions. Performance testing per ISO 10993 has been conducted which demonstrates that the device performs equivalent to the predicate device. ***Therefore, I recommend the device is found substantially equivalent.***

Questions? Contact FDA/CDRH/OCE/DID at CDRH-FOISTATUS@fda.hhs.gov or call 301-796-8118.

Records processed under FOIA Request #2015-1305; Released by CDRH on 05-11-2016.

II. Administrative Requirements

	Yes	No	N/A
Indications for Use page (Prescription)	X		
Truthful and Accuracy Statement	X		
510(k) Summary	X		
Standards Form	X		
Clinical Trials Form			X

510(k) Summary / 510(k) Statement

Required Elements for 510(k) Summary (21 CFR 807.92)			
	Clearly labeled "510(k) Summary"		Yes
	Submitter' s name, address, phone #, a contact person		Yes
	Date the summary was prepared		Yes
	The name of the device/trade name/common name/classification name		Yes
	An identification of the legally marketed predicate		Yes
	Description of the subject device		Yes
	Statement of intended use		Yes
	Technological characters	if same, a summary of comparison of technological characters	Yes
	Technological characters	If different, a summary of how do they compare to the predicate	Yes
	Performance Data	Brief discussion of non-clinical data submitted, referenced, or relied on	Yes
	Performance Data	Brief discussion of clinical data submitted, referenced, or relied on, including: - Description upon whom the device was tested, - Data obtained from the tests and especially: ▪ Adverse events and complications ▪ Other information for SE determination	N/A
	Performance Data	Conclusion that data demonstrate SE	Yes
Required Elements for 510(k) Statement (21 CFR 807.93)			
	Signed verbatim statement		N/A

III. Device Description

	Yes	No	N/A
Is the device life-supporting or life sustaining?		X	

Questions? Contact FDA/CDRH/OCE/DID at CDRH-FOISTATUS@fda.hhs.gov or call 301-796-8118.

Records processed under FOIA Request #2015-1305; Released by CDRH on 05-11-2016.

	Yes	No	N/A
Is the device an implant (implanted longer than 30 days)?		X	
Does the device design use software?	X		
Is the device sterile?		X	
Is the device reusable (not reprocessed single use)? Are "cleaning" instructions included for the end user?	X		

The REMstar SE is a microprocessor controlled blower based continuous positive airway pressure (CPAP) system. The system includes a heated humidifier and patient tubing (15mm, 22mm, or heated tubing).

The REMstar SE includes a CPAP mode only. While in CPAP mode, the device delivers a continuous positive airway pressure throughout the entire therapy session. In addition to the CPAP therapy mode, the REMstar SE incorporates several optional features to aid with patient comfort. These features include ramp, adjustable pressure relief (FLEX technologies), and humidification. Humidification options include both a heated humidifier and heated tubing. The heated humidifier adjusts the level of humidification by varying the temperature of a heated plate used to heat up a chamber of water. Optional heated tubing can then be used to maintain that air at a desired temperature until it reaches the patient's mask.

The REMstar SE is intended for use with a patient circuit that connects the device to a patient interface (mask). A typical patient circuit consists of patient tubing (15mm, 22mm, or heated tubing) and an exhalation device (if one is not present in the mask). When a heated humidifier is attached to the therapy device, the patient circuit connects to the air outlet port of the heated humidifier.

The only change made under this submission is a change in the material formulation in order to add colorants to the humidifier. There are no changes to the functionality of the CPAP.

IV. Indications for Use

"The REMstar SE delivers positive airway pressure therapy for the treatment of Obstructive Sleep Apnea in spontaneously breathing patients weighing over 30kg (66 lbs). It is for use in the home or hospital/institutional environment."

Reviewer's comments: *The Indications for use statement is identical to the predicate (K122769).*

V. Predicate Device Comparison

Predicate Devices: Remstar SE (K122769)

The only change compared to the predicate device (K122769) is for a modification to the material formulation to add colorants to the humidifier.

New materials:

(b)(4)
[redacted]

Questions? Contact FDA/CDRH/OCE/DID at CDRH-FOISTATUS@fda.hhs.gov or call 301-796-8118.

Records processed under FOIA Request #2015-1305; Released by CDRH on 05-11-2016.

The two new colorants added are incorporated in the humidifier tank and could be introduced into the patient gas pathway. Therefore, biocompatibility performance testing is necessary to determine equivalency to the predicate device. However, no new types of questions are introduced. The same biocompatibility questions would be raised for the predicate device and can be assessed through performance testing.

VI. Labeling

The provided labeling is unchanged from the predicate REMstar SE (K122769). The labeling includes prescription use statement, indications for use, and appropriate directions for use.

VII. Sterilization/Shelf Life/Reuse

The device is not provided sterile.

VIII. Biocompatibility

Only two new materials have been added to the humidifier tank. The heated humidifier may increase the risk of chemical leachates being introduced into the gas pathway. This device should be considered externally communicating with tissue contact. CPAP devices are generally considered to be permanent duration due to the cumulative use of the device. Therefore, the appropriate tests per the G95-1 memorandum are: cytotoxicity, sensitization, implantation, and genotoxicity. The sponsor has provided testing for all of the required tests for both of the new materials introduced. They also indicate that an extraction study has been conducted to evaluate the potential chemical leachates.

Reviewer's comments: *The sponsor has provided all of the appropriate tests, including two in vitro and one in vivo test for genotoxicity. All testing has passed or resulted in negligible reaction compared to the control, with the exception of a 'slight irritant' score for implantation testing on one of the materials* (b)(4) [redacted]. *It was at the low end of the scale defining 'slight irritant' (a score of 4.0, slight irritant= 3.0-8.9). However, the sponsor should justify the results for this testing.*

In addition, several of the tests included inappropriate methods for sample preparation and extraction. Therefore, it is not clear if the results are valid. Specifically, the genotoxicity mouse lymphoma test included two extraction vehicles, DMSO and RPMI$_o$ Medium. RPMI$_o$ was extracted at 37°C for 72 hours. However, as per ISO 10993-5, cell culture medium should use the conditions: 37°C for 24 hours. The sponsor should justify that the longer duration does not negatively affect the stability of the serum or constituents in the culture medium. Furthermore, the extractions vehicle dimethyl sulfoxide (DMSO) is used at a concentration of 1% according to test protocols. However, as per ISO 10993-5, DMSO may be cytotoxic at levels greater than 0.5% (volume fraction) and higher levels could negatively impact the test system.

In addition, the sponsor used a temperature of 121°C for 1 hour. While this temperature is included in ISO 10993-12, it is intended only for materials able to withstand very high temperatures, such as materials able to withstand autoclaving. The sponsor should justify their materials as being able to withstand these higher temperatures without degradation. If degradation occurs it could alter the properties of the materials and invalidate the results.

S001: *Additional testing has also been conducted for 12 week implantation which confirms the*

Questions? Contact FDA/CDRH/OCE/DID at CDRH-FOISTATUS@fda.hhs.gov or call 301-796-8118.

Records processed under FOIA Request #2015-1305; Released by CDRH on 05-11-2016.

device is a 'non-irritant'. The sponsor has provided adequate justification for the extraction conditions of 37°C for 72 hours based on ISO 10993-12. The DMSO concentration of 1% is based FDA recognized standard ASTM E1280. They have also provided justification for the extraction condition of 121°C for 1 hour based on the material properties of their device. Also, since the device is expected to encounter temperatures of up to 75°C during thermal disinfection it was considered necessary to use the higher extraction temperature criteria per ISO 10993-12. These responses are all considered to be acceptable. For more details please refer to the deficiencies section of this memo below.

IX. Software

N/A- No modifications to the device software

X. Electromagnetic Compatibility and Electrical, Mechanical and Thermal Safety

N/A- No modifications to the electrical components

XI. Performance Testing – Bench

The changes made by incorporating two new colorants would not be expected to alter performance of the device.

XII. Performance Testing – Animal

N/A- No animal testing is required based on the changes made.

XIII. Performance Testing – Clinical

N/A- No clinical testing is required based on the changes made to the colorants of the humidifier.

Questions? Contact FDA/CDRH/OCE/DID at CDRH-FOISTATUS@fda.hhs.gov or call 301-796-8118.

Records processed under FOIA Request #2015-1305; Released by CDRH on 05-11-2016.

XIV. Substantial Equivalence Discussion

	Yes	No	
1. Same Indication Statement?	X		If **YES** = Go To 3
2. Do Differences Alter The Effect Or Raise New Issues of Safety Or Effectiveness?			If **YES** = Stop **NSE**
3. Same Technological Characteristics?		X	If **YES** = Go To 5
4. Could The New Characteristics Affect Safety Or Effectiveness?	X		If **YES** = Go To 6
5. Descriptive Characteristics Precise Enough?			If **NO** = Go To 8 If **YES** = Stop **SE**
6. New Types Of Safety Or Effectiveness Questions?		X	If **YES** = Stop **NSE**
7. Accepted Scientific Methods Exist?	X		If **NO** = Stop **NSE**
8. Performance Data Available?	X		If **NO** = Request Data
9. Data Demonstrate Equivalence?	X		Final Decision: **SE**

Note: See http://eroom.fda.gov/eRoomReq/Files/CDRH3/CDRHPremarketNotification510kProgram/0_4148/FLOWCHART%20DECISION%20TREE%20.DOC for Flowchart to assist in decision-making process. Please complete the following table and answer the corresponding questions. "Yes" responses to questions 2, 4, 6, and 9, and every "no" response requires an explanation.

1. Explain how the new indication differs from the predicate device's indication:

2. Explain why there is or is not a new effect or safety or effectiveness issue:

3. Describe the new technological characteristics:

   There is a change in material formulation.

4. Explain how new characteristics could or could not affect safety or effectiveness:

   The changes affect the biocompatibility of the device which could affect device safety.

5. Explain how descriptive characteristics are not precise enough:

6. Explain new types of safety or effectiveness question(s) raised or why the question(s) are not new:

   The question of biocompatibility is not new and we have test methods to assess this (e.g. ISO 10993).

7. Explain why existing scientific methods cannot be used:

8. Explain what performance data is needed:

   The sponsor should provide justification of their test methods (see deficiencies below).

Questions? Contact FDA/CDRH/OCE/DID at CDRH-FOISTATUS@fda.hhs.gov or call 301-796-8118.

Records processed under FOIA Request #2015-1305; Released by CDRH on 05-11-2016.

9. Explain how the performance data demonstrates that the device is or is not substantially equivalent:

The sponsor has adequately addressed all of the previous deficiencies. The changes to the materials do not alter the intended use of the device or introduce any new types of safety or effectiveness questions. Performance testing per ISO 10993 has been conducted which demonstrates that the device performs equivalent to the predicate device. Therefore, I recommend the device is considered substantially equivalent and classified as:

XV. Deficiencies

(b)(4)

[redacted]

Questions? Contact FDA/CDRH/OCE/DID at CDRH-FOISTATUS@fda.hhs.gov or call 301-796-8118.

Records processed under FOIA Request #2015-1305; Released by CDRH on 05-11-2016.

(b)(4)

[redacted]

XVI. Contact History

4/12/13	The above deficiencies were sent to the sponsor by email and the submission was placed on hold.
5/15/13	The 510(k) summary states that testing is conducted per ISO 10993-1, but does not list out the specific tests. In a phone call with the sponsor's representative Mr. Frank Kadi, I requested that the 510(k) summary is updated to include all of the biocompatibility tests. This was provided by the sponsor and has been added to the file.

Questions? Contact FDA/CDRH/OCE/DID at CDRH-FOISTATUS@fda.hhs.gov or call 301-796-8118.

Records processed under FOIA Request #2015-1305; Released by CDRH on 05-11-2016.

XVII. Recommendation

The sponsor has adequately addressed all of the previous deficiencies. The changes to the materials do not alter the intended use of the device or introduce any new types of safety or effectiveness questions. Performance testing per ISO 10993 has been conducted which demonstrates that the device performs equivalent to the predicate device. Therefore, I recommend the device is found substantially equivalent and should be classified as:

Regulation Number: 21 CFR 868.5905
Regulation Name: Ventilator, Non-Continuous (Respirator)
Regulatory Class: Class II
Product Code: BZD

Digital Signature Concurrence Table	
Reviewer Sign-Off	Amy K. Levelle -S 2013.05.21 10:35:05 -04'00'
Branch Chief Sign-Off	Paul H. Shin -S 2013.05.21 10:48:14 -04'00'
Division Sign-Off	Kwame O. Ulmer -S 2013.05.21 11:37:07 -04'00'

Questions? Contact FDA/CDRH/OCE/DID at CDRH-FOISTATUS@fda.hhs.gov or call 301-796-8118.

Records processed under FOIA Request #2015-1305; Released by CDRH on 05-11-2016.

DEPARTMENT OF HEALTH & HUMAN SERVICES **Public Health Service**

Food and Drug Administration
Center for Devices and Radiological Health
Document Control Center WO66-G609
10903 New Hampshire Avenue
Silver Spring, MD 20993-0002

April 15, 2013

RESPIRONICS, INC.
1740 GOLDEN MILE HIGHWAY
MONROEVILLE, PENNSYLVANIA 15146
ATTN: FRANK KADI

510k Number: K130077
Product: REMSTAR SE
On Hold As of 4/12/2013
180th day is 10/9/2013

We are holding your above-referenced Premarket Notification (510(k)) for 30 days pending receipt of the additional information that was requested by the Office of Device Evaluation. Please remember that all correspondence concerning your submission MUST cite your 510(k) number and be sent in duplicate to the Document Mail Center at the above letterhead address. Correspondence sent to any address other than the one above will not be considered as part of your official premarket notification submission. Also, please note the new Blue Book Memorandum regarding Fax and E-mail Policy entitled, "Fax and E-Mail Communication with Industry about Premarket Files Under Review. Please refer to this guidance for information on current fax and e-mail practices at http://www.fda.gov/MedicalDevices/DeviceRegulationandGuidance/GuidanceDocuments/ucm089402.htm.

The deficiencies identified represent the issues that we believe need to be resolved before our review of your 510(k) submission can be successfully completed. In developing the deficiencies, we carefully considered the statutory criteria as defined in Section 513(i) of the Federal Food, Drug, and Cosmetic Act for determining substantial equivalence of your device. We also considered the burden that may be incurred in your attempt to respond to the deficiencies. We believe that we have considered the least burdensome approach to resolving these issues. If, however, you believe that information is being requested that is not relevant to the regulatory decision or that there is a less burdensome way to resolve the issues, you should follow the procedures outlined in the "A Suggested Approach to Resolving Least Burdensome Issues" document. It is available on our Center web page at: http://www.fda.gov/MedicalDevices/DeviceRegulationandGuidance/Overview/MedicalDeviceProvisionsofFDAModernizationAct/ucm136685.htm.

In accordance with 21 CFR 807.87(l), FDA may consider a 510(k) to be withdrawn if the submitter fails to provide additional information within 30 days of an Additional Information (AI) request. FDA generally permits submitters additional time to respond to such requests. FDA intends to automatically grant a maximum of 180 calendar days from the date of the AI request, even if the submitter has not requested an extension. Therefore, submitters are no longer required to submit written requests for extension. However, submitters should be aware that FDA intends to issue a notice of withdrawal under 21 CFR 807.87(l) if FDA does not receive, in a submission to the appropriate Document Control Center, a complete response to all of the deficiencies in the AI request within 180 calendar days of the date that FDA issued that AI request. In this instance, pursuant to 21 CFR 20.29, a copy of your 510(k) submission will remain in the Office of Device Evaluation. If you then wish to resubmit this 510(k) notification, a new number will be assigned and your submission will be considered a new premarket notification submission.

Questions? Contact FDA/CDRH/OCE/DID at CDRH-FOISTATUS@fda.hhs.gov or call 301-796-8118.

Records processed under FOIA Request #2015-1395; Released by CDRH on 05-11-2016

For further information regarding how various FDA and industry actions that may be taken on 510(k)s should affect the review clock for purposes of meeting the Medical Device User Fee Amendments of 2012 (MDUFA III), to the Federal Food, Drug, and Cosmetic Act, you may refer to our guidance document entitled "Guidance for Industry and Food and Drug Administration Staff - FDA and Industry Actions on Premarket Notification (510(k)) Submissions: Effect on FDA Review Clock and Goals". You may review this document at <http://www.fda.gov/MedicalDevices/DeviceRegulationandGuidance/GuidanceDocuments/ucm089735.htm>.

Please remember that the Safe Medical Devices Act of 1990 states that you may not place this device into commercial distribution until you receive a decision letter from FDA allowing you to do so.

If you have procedural questions, please contact the Division of Small Manufacturers International and Consumer Assistance (DSMICA) at (301)796-7100 or at their toll-free number (800)638-2041, or contact the 510k staff at (301)796-5640.

Sincerely yours,

Marjorie Shulman
Director, 510(k) Program
Premarket Notification Section
Office of Device Evaluation
Center for Devices and Radiological Health

Questions? Contact FDA/CDRH/OCE/DID at CDRH-FOISTATUS@fda.hhs.gov or call 301-796-8118.

Records processed under FOIA Request #2015-1305; Released by CDRH on 05-11-2016.

Mcdonald, Lisa *

From: Mcdonald, Lisa *
Sent: Monday, April 15, 2013 10:31 AM
To: frank.kadi@philips.com
Cc: DCCLetters
Subject: K130077/S001 HOLD LETTER
Attachments: K130077.pdf

Questions? Contact FDA/CDRH/OCE/DID at CDRH-FOISTATUS@fda.hhs.gov or call 301-796-8118.

Records processed under FOIA Request #2015-1305; Released by CDRH on 05-11-2016.

Contains Nonbinding Recommendations

Print Form

Acceptance Checklist for Traditional 510(k)s

(Should be completed within 15 days of DCC receipt)

The following information is not intended to serve as a comprehensive review.

510(k) #: K130077 Date Received by DCC: Feb 11, 2013

Lead Reviewer: Amy LeVelle

Branch: RPDB Division: DAGRID Center/Office: CDRH/ODE

Note: If an element is left blank on the checklist, it does not mean the checklist is incomplete. It means the reviewer did not assess the element during RTA and the element will be assessed during the substantive review.

Preliminary Questions

Answers in the shaded blocks indicate consultations with Center advisor is needed	**Yes**	**No**
1) Is the product a device (per section 201(h) of the FD&C Act) or a combination product (per 21 CFR 3.2(e)) with a device constituent part subject to review in a 510(k)? If it appears not to be a device (per section 201(h) of the FD&C Act) or such a combination product, or you are unsure, consult with the CDRH Jurisdictional Officer or the CBER Office Jurisdiction Liaison to determine the appropriate action, and inform division management. *Provide a summary of the Jurisdictional Officer's/Liaison's determination.* If the product does not appear to be a device or such a combination product, mark "No."	X	
Comments?		
2) Is the application with the appropriate Center? If the product is a device or a combination product with a device constituent part, is it subject to review by the Center in which the submission was received? If you believe the application is not with the appropriate Center or you are unsure, consult with the CDRH Jurisdictional Officer or CBER Office Jurisdiction Liaison to determine the appropriate action and inform your division management. *Provide a summary of the Jurisdictional Officer's/Liaison's determination.* If application should not be reviewed by your Center mark "No."	X	
Comments?		
3) If a Request for Designation was submitted for the device or combination product with a device constituent part and assigned to your center, identify the RFD # and confirm the following: a) Is the device or combination product the same (e.g., design, formulation) as that presented in the RFD submission? b) Are the indications for use for the device or combination product identified in the 510(k) the same as those identified in the RFD submission ? If you believe the product or the indications presented in the 510(k) have changed from the RFD, or you are unsure, consult with the CDRH Jurisdictional Officer or appropriate CBER Jurisdiction Liaison to determine the appropriate action and inform your division management. Provide summary of Jurisdictional Officer's/Liaison's determination. If the answer to either question is no, mark "No." If there was no RFD, skip this question.		
Comments?		
4) Is this device type eligible for a 510(k) submission? If a 510(k) does not appear to be appropriate (e.g., Class III type and PMA required, or Class I or II type and 510(k)-exempt), you should consult with the CDRH 510(k) Program Director or appropriate CBER staff during the acceptance review. If 510(k) is not the appropriate regulatory submission, mark "No."	X	
Comments?		

Records processed under FOIA Request #2015-1305; Released by CDRH on 05-11-2016.

5) Is there a pending PMA for the same device with the same indications for use? If yes, consult division management and the CDRH 510(k) Program Director or appropriate CBER staff to determine the appropriate action.		X
Comments?		
6) If clinical studies have been submitted, is the submitter the subject of an Application Integrity Policy (AIP)? If yes, consult with the CDRH Office of Compliance/Division of Bioresearch Monitoring (OC/DBM - BIMO) or CBER Office of Compliance and Biologics Quality/Division of Inspections and Surveillance/Bioresearch Monitoring Branch (OCBQ/DIS/BMB) to determine the appropriate action. Check on web at http://www.fda.gov/ICECI/EnforcementActions/ApplicationIntegrityPolicy/ucm134453.htm		X
Comments?		

If the answer to 1 or 2 appears to be "No," then stop review of the 510(k) and issue the "Original Jurisdictional Product" letter.
If the answer to 3a or 3b appears to be "No," then stop the review and contact the CDRH Jurisdictional Officer or CBER Office of Jurisdiction Liaison.
If the answer to 4 is "No," the lead reviewer should consult division management and other Center resources to determine the appropriate action.
If the answer to 5 is "Yes," then stop review of the 510(k), contact the CDRH 510(k) Staff and PMA Staff, or appropriate CBER staff.
If the answer to 6 is "Yes," then contact CDRH/OC/DBM-BIMO or CBER/OCBQ/DIS/BMB, provide a summary of the discussion with the BIMO Staff, and indicate BIMO's recommendation/action.

21

Records processed under FOIA Request #2015-1305; Released by CDRH on 05-11-2016.

Organizational Elements

Failure to include these items alone generally should not result in an RTA designation.

	Yes	No
1) Submission contains a Table of Contents	X	
2) Each section is labeled (e.g., headings or tabs designating Device Description section, Labeling section, etc.)	X	
3) All pages of the submission are numbered.	X	
4) Type of 510(k) is identified (i.e., traditional, abbreviated, or special)	X	
Comments?		

22

Records processed under FOIA Request #2015-1305; Released by CDRH on 05-11-2016.

Elements of a Complete Submission (RTA Items)

(21 CFR 807.87 unless otherwise indicated)

Submission should be designated RTA if not addressed.

Check "Yes" if item is present, "N/A" if it is not needed and "No" if it is not included but needed.

- Any "No" answer will result in a "Refuse to Accept" decision. - Each element on the checklist should be addressed within the submission. An applicant may provide a rationale for omission for any criteria that are deemed not applicable. If a rationale is provided, the criteria is considered Present (Yes). An assessment of the rationale will be considered during the review of the submission.	Yes	No	N/A	Comment
A. Administrative				
1) All content used to support the submission is written in English (including translations of test reports, literature articles, etc.)	X			
2) Submission identifies the following (such as in CDRH Premarket Review Submission Cover Sheet (Form 3514) or 510(k) cover letter):	X			
a) Device trade name or proprietary name	X			
b) Device common name	X			
c) Device class and panel or Classification regulation or Statement that device has not been classified with rationale for that conclusion	X			
3) Submission contains Indications for Use Statement with Rx and/or OTC designation (see also 21 CFR 801.109).	X			
4) Submission contains 510(k) Summary or 510(k) Statement	X			
a) Summary contains all elements per 21 CFR 807.92 *(See also* 510(k) Summary Checklist*)*	X			
b) Statement contains all elements per 21 CFR 807.93			X	
5) Submission contains Truthful and Accuracy Statement per 21 CFR 807.87(k) *See recommended* format.	X			
6) Submission contains Class III Summary and Certification. *See recommended* content.			X	
7) Submission contains clinical data			X	
8) If submission references use of a national or international standard as part of demonstration of substantial equivalence, submission contains Standards Data Report for 510(k)s (Form 3654) or includes detailed information about how and the extent to which the standard has been followed.	X			
9) The submission identifies prior submissions for the same device for which FDA provided feedback related to the data or information needed to support substantial equivalence (e.g., submission numbers for Pre-Submission, IDE, prior not substantially equivalent (NSE) determination, prior 510(k) that was deleted or withdrawn) or states that there were no prior submissions for the subject device.	X			
a) If there were prior submissions, the submitter has identified where in the current submission any issues related to a determination of substantial equivalence outlined in prior communications are addressed. For additional information regarding the Pre-Submission process, please refer to the Draft Guidance "Medical Devices: The Pre-Submission Program and Meetings with FDA Staff." Once finalized, this guidance will represent the Agency's current thinking on this topic.	X			
B. Device Description				
10)				

23

Records processed under FOIA Request #2015-1305; Released by CDRH on 05-11-2016.

Elements of a Complete Submission (RTA Items)
(21 CFR 807.87 unless otherwise indicated)

Submission should be designated RTA if not addressed.

Check "Yes" if item is present, "N/A" if it is not needed and "No" if it is not included but needed.

- Any "No" answer will result in a "Refuse to Accept" decision. - Each element on the checklist should be addressed within the submission. An applicant may provide a rationale for omission for any criteria that are deemed not applicable. If a rationale is provided, the criteria is considered Present (Yes). An assessment of the rationale will be considered during the review of the submission.	Yes	No	N/A	Comment
a) If there are requirements regarding the device description, such as special controls, in a device-specific regulation that are applicable to the device, the submission includes device description information to establish that the submitter has followed the device-specific requirement.			X	
b) If there is a device-specific guidance, other than a special controls guidance document, applicable to the device, the submission includes device description information to establish that the submitter has addressed the recommendations or otherwise has met the applicable statutory or regulatory criteria through an alternative approach.			X	
11) Descriptive information is present and consistent within the submission (e.g., the device description section is consistent with the device description in the labeling), including:				
a) A description of the principle of operation and mechanism of action for achieving the intended effect.	X			
b) A description of proposed conditions of use, such as surgical technique for implants; anatomical location of use; user interface; how the device interacts with other devices; and/or how the device interacts with the patient.	X			
c) A list and description of each device for which clearance is requested.	X			
12) Submission contains representative engineering drawing(s), schematics, illustrations and/or figures of the device that are clear, legible, labeled, and include dimensions.	X			
13) If device is intended to be marketed with multiple components, accessories, and/or as part of a system			X	
C. Substantial Equivalence Discussion				
14) Submitter has identified a predicate device.	X			
a) Predicate's 510(k) number, trade name, and model number (if applicable) provided. For predicates that are preamendments devices, information is provided to document preamendments status. *Information regarding* documenting preamendment status *is available online.*	X			
b) The identified predicate(s) is consistent throughout the submission (i.e., the predicate(s) identified in the Substantial Equivalence section is the same as that listed in the 510(k) Summary (if applicable) and that used in comparative performance testing.	X			
15) Submission includes a comparison of the following for the predicate(s) and subject device				
a) Indications for Use	X			
b) Technology, including features, materials, and principles of operation	X			
16) Submission includes an analysis of why any differences between the subject device and predicate(s) do not render the device NSE (e.g., does not constitute a new intended use; and any differences in technological characteristics are accompanied by information that demonstrates the device is as safe and effective as the predicate and do not raise different questions of safety and effectiveness than the predicate), affect safety or effectiveness, or raise different questions of safety and effectiveness (see section 513(i)(1)(A) of the FD&C Act and 21 CFR 807.87(f))	X			

24

Records processed under FOIA Request #2015-1305; Released by CDRH on 05-11-2016.

Elements of a Complete Submission (RTA Items)

(21 CFR 807.87 unless otherwise indicated)

Submission should be designated RTA if not addressed.

Check "Yes" if item is present, "N/A" if it is not needed and "No" if it is not included but needed.

- Any "No" answer will result in a "Refuse to Accept" decision. - Each element on the checklist should be addressed within the submission. An applicant may provide a rationale for omission for any criteria that are deemed not applicable. If a rationale is provided, the criteria is considered Present (Yes). An assessment of the rationale will be considered during the review of the submission.	Yes	No	N/A	Comment
D. Proposed Labeling (see also 21 CFR part 801)				
If *in vitro* diagnostic (IVD) device, criteria 17, 18, & 19 may be omitted.				
17) Submission includes proposed package labels and labeling (e.g., instructions for use, package insert, operator's manual) that include a description of the device, its intended use, and the directions for use.	X			
a) Indications for use are stated in labeling and are identical to Indications for Use form and 510(k) Summary (if 510(k) Summary provided).	X			
b) Submission includes directions for use that - include statements of all conditions, purposes or uses for which the device is intended (e.g., hazards, warnings, precautions, contraindications) AND - includes directions for layperson (see 21 CFR 801.5) OR submission states that device qualifies for exemption per 21 CFR 801 Subpart D	X			
18) If indicated for prescription use, labeling includes the prescription use statement (see 21 CFR 801.109(b)(1)) or "Rx only" symbol [See also Alternative to Certain Prescription Device Labeling Requirements]	X			
19) General labeling provisions				
a) Labeling includes name and place of business of the manufacturer, packer, or distributor (21 CFR 801.1).	X			
b) Labeling includes device common or usual name. (21 CFR 801.61)	X			
20)				
a) If there are requirements regarding labeling, such as special controls, in a device-specific regulation that are applicable to the device, the submission includes labeling to establish that the submitter has followed the device-specific requirement.			X	
b) If there is a device-specific guidance, other than a special controls guidance document, applicable to the device, the submission includes labeling to establish that the submitter has addressed the recommendations or otherwise has met the applicable statutory or regulatory criteria through an alternative approach.			X	
c) If there is a special controls document applicable to the device, the submission includes labeling to establish that the submitter has complied with the particular mitigation measures set forth in the special controls document or uses alternative mitigation measures but provides a rationale to demonstrate that those alternative measures identified by the firm will provide at least an equivalent assurance of safety and effectiveness.			X	
21) If the device is an in vitro diagnostic device, provided labeling includes all applicable information required per 21 CFR 809.10.			X	
E. Sterilization				
If IVD device and sterilization is not applicable, select "N/A" and criteria below will be omitted from checklist.				
Submission states that the device and/or accessories are: (one of the below must be checked)				

25

Records processed under FOIA Request #2015-1305; Released by CDRH on 05-11-2016

Elements of a Complete Submission (RTA Items)

(21 CFR 807.87 unless otherwise indicated)

Submission should be designated RTA if not addressed.

heck "Yes" if item is present, "N/A" if it is not needed and "No" if it is not included but needed.

Any "No" answer will result in a "Refuse to Accept" decision. - Each element on the checklist should be addressed within the submission. An applicant may provide a rationale for omission for any criteria that are deemed not applicable. If a rationale is provided, the criteria is considered Present (Yes). An assessment of the rationale will be considered during the review of the submission.	Yes	No	N/A	Comment
provided sterile				
provided non-sterile but sterilized by the end user				
X non-sterile when used				
Information regarding the sterility status of the device is not provided.				
This information will determine whether and what type of additional information may be necessary for a substantial equivalence determination.				
22) Assessment of the need for sterilization information				
a) Identification of device, and/or accessories, and/or components that are provided sterile.				
b) Identification of device, and/or accessories, and/or components that are end user sterilized.			X	
c) Identification of device, and/or accessories, and/or components that are reusable and cleaning /disinfection instructions are provided.			X	
5)				
a) If there are requirements regarding sterility, such as special controls, in a device-specific regulation that are applicable to the device, the submission includes sterility information to establish that the submitter has followed the device-specific requirement.			X	
b) If there is a device-specific guidance, other than a special controls guidance document, applicable to the device, the submission includes sterility information to establish that the submitter has addressed the recommendations or otherwise has met the applicable statutory or regulatory criteria through an alternative approach.			X	
c) If there is a special controls document applicable to the device, the submission includes sterility information to establish that the submitter has complied with the particular mitigation measures set forth in the special controls document or uses alternative mitigation measures but provides a rationale to demonstrate that those alternative measures identified by the firm will provide at least an equivalent assurance of safety and effectiveness.			X	
F. Shelf Life				
26) Proposed shelf life/expiration date stated			X	
27) For sterile device, submission includes summary of methods used to establish that device will remain sterile through the proposed shelf life or a rationale for why testing to establish shelf life is not applicable.			X	
28) Submission includes summary of methods used to establish that device performance is not adversely affected by aging or includes a rationale for why the storage conditions are not expected to affect device safety or effectiveness.	X			
Biocompatibility				
IVD device, select "N/A" and the below criteria will be omitted from checklist.				

Records processed under FOIA Request #2015-1305; Released by CDRH on 05-11-2016.

Elements of a Complete Submission (RTA Items)

(21 CFR 807.87 unless otherwise indicated)

Submission should be designated RTA if not addressed.

Check "Yes" if item is present, "N/A" if it is not needed and "No" if it is not included but needed.

- Any "No" answer will result in a "Refuse to Accept" decision. - Each element on the checklist should be addressed within the submission. An applicant may provide a rationale for omission for any criteria that are deemed not applicable. If a rationale is provided, the criteria is considered Present (Yes). An assessment of the rationale will be considered during the review of the submission.	Yes	No	N/A	Comment
Submission states that there: (one of the below must be checked)				
X are direct or indirect (e.g., through fluid infusion) patient-contacting components.				
are no direct or indirect (e.g., through fluid infusion) patient-contacting components.				
Information regarding the patient contact status of the device is not provided.				
This information will determine whether and what type of additional information may be necessary for a substantial equivalence determination.				
29) Submission includes list of patient-contacting device components and associated materials of construction, including identification of color additives, if present	X			
30) Submission identifies contact classification (e.g., surface-contacting, less then 24 hour duration, etc.)	X			
31) Biocompatibility assessment of patient-contacting components Submission includes: Test protocol (including identification and description of test article), methods, pass/fail criteria, and results provided for each completed test, OR a statement that biocompatibility testing is not needed with a rationale (e.g., materials and manufacturing/processing are identical to the predicate).	X			
H. Software				
Submission states that the device: (one of the below must be checked)				
does contain software/firmware.				
X does not contain software/firmware.				
Information regarding whether the device contains software is not provided.				
This information will determine whether and what type of additional information may be necessary for a substantial equivalence determination.				
I. EMC and Electrical Safety				
Submission states that the device: (one of the below must be checked)				
does require EMC and Electrical Safety evaluation.				
X does not require EMC and Electrical Safety evaluation.				
Information regarding whether the device requires EMC and Electrical Safety evaluation is not provided.				
This information will determine whether and what type of additional information may be necessary for a substantial equivalence determination.				
J. Performance Data - General If IVD device, select "N/A" and the below criteria will be omitted from checklist. Performance data criteria relating to IVD devices will be addressed in Section K.				

Records processed under FOIA Request #2015-1305; Released by CDRH on 05-11-2016

Elements of a Complete Submission (RTA Items)

(21 CFR 807.87 unless otherwise indicated)

Submission should be designated RTA if not addressed.

Check "Yes" if item is present, "N/A" if it is not needed and "No" if it is not included but needed.

Any "No" answer will result in a "Refuse to Accept" decision. - Each element on the checklist should be addressed within the submission. An applicant may provide a rationale for omission for any criteria that are deemed not applicable. If a rationale is provided, the criteria is considered Present (Yes). An assessment of the rationale will be considered during the review of the submission.	Yes	No	N/A	Comment
36) Full test report is provided for each completed test. A full test report includes: objective of the test, description of the test methods and procedures, study endpoint(s), pre-defined pass/fail criteria, results summary, conclusions, and an explanation of how the data generated from the test supports a finding of substantial equivalence.	X			
37)				
a) If there are requirements regarding performance data, such as special controls, in a device-specific regulation that are applicable to the device, the submission includes performance data to establish that the submitter has followed the device-specific requirement.			X	
b) If there is a device-specific guidance, other than a special controls guidance document, applicable to the device, the submission includes performance data to establish that the submitter has addressed the recommendations or otherwise has met the applicable statutory or regulatory criteria through an alternative approach.			X	
c) If there is a special controls document applicable to the device, the submission includes performance data to establish that the submitter has complied with the particular mitigation measures set forth in the special controls document or uses alternative mitigation measures but provides a rationale to demonstrate that those alternative measures identified by the firm will provide at least an equivalent assurance of safety and effectiveness.			X	
38) If literature is referenced in the submission, submission includes:			X	
39) For each completed nonclinical (i.e., animal) study conducted			X	
K. Performance Characteristics - In Vitro Diagnostic Devices Only **(Also see 21 CFR 809.10(b)(12))**				
Submission states that the device: (one of the below must be checked)				
is an in vitro diagnostic device.				
X is not an in vitro diagnostic device.				

Records processed under FOIA Request #2015-1305; Released by CDRH on 05-11-2016.

Decision: ◉ Accept ○ Refuse to Accept

If Accept, notify applicant.

If Refuse to Accept, notify applicant in writing and include a copy of this checklist.

Digital Signature Concurrence Table

Reviewer Sign-Off	Amy K. Levelle -S 2013.02.21 11:16:30 -05'00'
Branch Chief Sign-Off (digital signature optional)*	Albert E. Moyal -S c=US, o=U.S. Government, ou=HHS, ou=FDA, ou=People, 0.9.2342.19200300.100.1.1=1300059331, cn=Albert E. Moyal -S 2013.02.21 12:39:13 -05'00'
Division Sign-Off (digital signature optional)*	

* Branch and Division review of checklist and concurrence with decision required. Branch and Division digital signature optional.

Records processed under FOIA Request #2015-1305; Released by CDRH on 05-11-2016.

Food and Drug Administration
Office of Device Evaluation &
Office of In Vitro Diagnostics

COVER SHEET MEMORANDUM

From: Reviewer Name

Subject: 510(k) Number K130077/S1

To: The Record

Please list CTS decision code _____

☐ Refused to accept (Note: this is considered the first review cycle, See Screening Checklist http://eroom.fda.gov/eRoomReq/Files/CDRH3/CDRHPremarketNotification510kProgram/0_5631/Screening%20Checklist%207%202%2007.doc)

☐ Hold (Additional Information or Telephone Hold).

☐ Final Decision (SE, SE with Limitations, NSE (select code below), Withdrawn, etc.).

Not Substantially Equivalent (NSE) Codes

☐	NO	NSE for lack of predicate
☐	NI	NSE for new intended use
☐	NQ	NSE for new technology that raises new questions of safety and effectiveness
☐	NU	NSE for new intended use AND new technology raising new questions of safety and effectiveness
☐	NP	NSE for lack of performance data
☐	NS	NSE no response
☐	NL	NSE for lack of performance data AND no response
☐	NM	NSE pre-amendment device call for PMAs (515i)
☐	NC	NSE post-amendment device requires PMAs
☐	NH	NSE for new molecular entity requires PMA
☐	TR	NSE for transitional device

Please complete the following for a final clearance decision (i.e., SE, SE with Limitations, etc.):		YES	NO
Indications for Use Page	*Attach IFU*		
510(k) Summary /510(k) Statement	*Attach Summary*		
Truthful and Accurate Statement.	*Must be present for a Final Decision*		
Is the device Class III?			
If yes, does firm include Class III Summary?	*Must be present for a Final Decision*		
Does firm reference standards? (If yes, please attach form from http://www.fda.gov/opacom/morechoices/fdaforms/FDA-3654.pdf)			
Is this a combination product? (Please specify category _____, see http://eroom.fda.gov/eRoomReq/Files/CDRH3/CDRHPremarketNotification510kProgram/0_413b/COMBINATION%20PRODUCT%20ALGORITHM%20(REVISED%203-12-03).DOC			
Is this a reprocessed single use device? (Guidance for Industry and FDA Staff – MDUFMA - Validation Data in 510(k)s for Reprocessed Single-Use Medical Devices, http://www.fda.gov/cdrh/ode/guidance/1216.html)			
Is this device intended for pediatric use only?			
Is this a prescription device? (If both prescription & OTC, check both boxes.)			
Did the application include a completed FORM FDA 3674, Certification with Requirements of ClinicalTrials.gov Data Bank?			
Is clinical data necessary to support the review of this 510(k)?			
For United States-based clinical studies **only**: Did the application include a completed FORM FDA 3674, *Certification with Requirements of ClinicalTrials.gov Data Bank*? (If study was			

Records processed under FOIA Request #2015-1305; Released by CDRH on 05-11-2016.

conducted in the United States, and FORM FDA 3674 was not included or incomplete, then applicant must be contacted to obtain completed form.)

Does this device include an Animal Tissue Source?

All Pediatric Patients age<=21

Neonate/Newborn (Birth to 28 days)

Infant (29 days -< 2 years old)

Child (2 years -< 12 years old)

Adolescent (12 years -< 18 years old)

Transitional Adolescent A (18 - <21 years old) Special considerations are being given to this group, different from adults age ≥ 21 (different device design or testing, different protocol procedures, etc.)

Transitional Adolescent B (18 -<= 21; No special considerations compared to adults => 21 years old)

Nanotechnology

Is this device subject to the Tracking Regulation? (Medical Device Tracking Guidance, http://www.fda.gov/cdrh/comp/guidance/169.html) *Contact OC.*

Regulation Number **Class*** **Product Code**

_____

(*If unclassified, see 510(k) Staff)

Additional Product Codes: _____

Review: _____

(Branch Chief) (Branch Code) (Date)

Final Review: _____

(Division Director) (Date)

Records processed under FOIA Request #2015-1305; Released by CDRH on 05-11-2016.

510(k) "SUBSTANTIAL EQUIVALENCE" DECISION-MAKING PROCESS

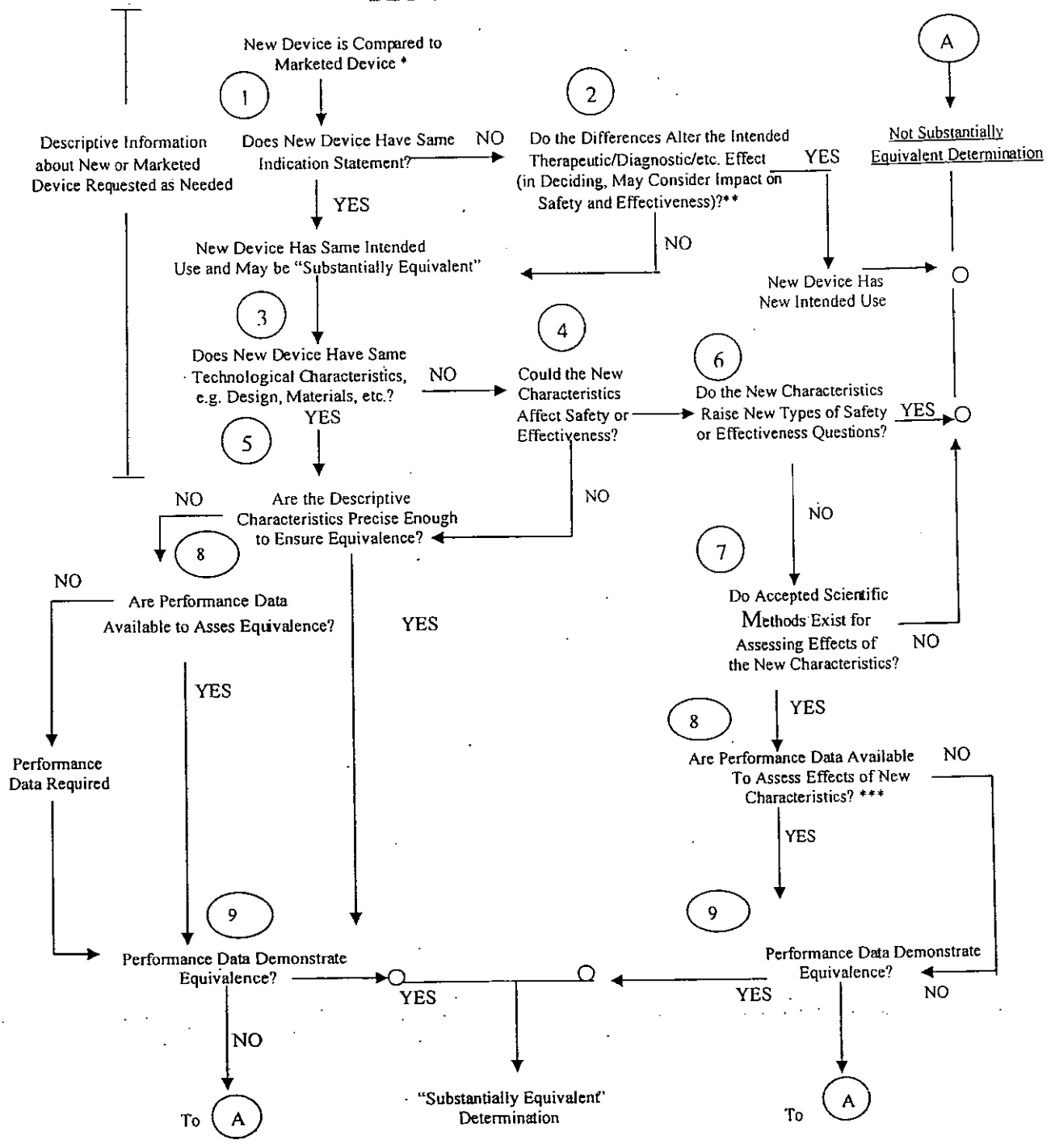

* 510(k) Submissions compare new devices to marketed devices. FDA requests additional information if the relationship between marketed and "predicate" (pre-Amendments or reclassified post-Amendments) devices is unclear.

** This decision is normally based on descriptive information alone, but limited testing information is sometimes required.

*** Data maybe in the 510(k), other 510(k)s, the Center's classification files, or the literature.

Questions? Contact FDA/CDRH/OCE/DID at CDRH-FOISTATUS@fda.hhs.gov or call 301-796-8118.

Records processed under FOIA Request #2015-1305; Released by CDRH on 05-11-2016.

DEPARTMENT OF HEALTH & HUMAN SERVICES **Public Health Service**

Food and Drug Administration
Center for Devices and Radiological Health
Document Control Center WO66-G609
10903 New Hampshire Avenue
Silver Spring, MD 20993-0002

February 11, 2013

RESPIRONICS, INC.
1740 GOLDEN MILE HIGHWAY
MONROEVILLE, PENNSYLVANIA 15146
ATTN: FRANK KADI

510k Number: K130077

Product: REMSTAR SE

The additional information you have submitted has been received.

We will notify you when the processing of this submission has been completed or if any additional information is required. Pleaseremember that all correspondence concerning your submission MUST be sent to the Document Mail Center at the above letterhead address. Correspondence sent to any address other than the one above will not be considered as part of your official premarket notification submission. Also, please note the new Blue Book Memorandum regarding Fax and E-mail Policy entitled, "Fax and E-Mail Communication with Industry about Premarket Files Under Review. Please refer to this guidance for information on current fax and e-mail practices at http://www.fda.gov/MedicalDevices/DeviceRegulationandGuidance/GuidanceDocuments/ucm089402.htm. On August 12, 2005 CDRH issued the Guidance for Industry and FDA Staff: Format for Traditional and Abbreviated 510(k)s. This guidance can be found at http://www.fda.gov/MedicalDevices/DeviceRegulationandGuidance/GuidanceDocuments/ucm084365.htm. Please refer to this guidance for assistance on how to format an original submission for a Traditional or Abbreviated 510(k).

The Safe Medical Devices Act of 1990, signed on November 28, states that you may not place this device into commercial distribution until you receive a letter from FDA allowing you to do so. As in the past, we intend to complete our review as quickly as possible. Generally we do so in 90 days. However, the complexity of a submission or a requirement for additional information may occasionally cause the review to extend beyond 90 days. Thus, if you have not received a written decision or been contacted within 90 days of our receipt date you may want to check with FDA to determine the status of your submission.

Please ensure that whether you submit a 510(k) Summary as per 21 CFR 807.92, or a 510(k) Statement as per 21 CFR 807.93, it meets the content and format regulatory requirements.

If you have procedural questions, please contact the Division of Small Manufacturers International and Consumer Assistance (DSMICA) at (301)796-7100 or at their toll-free number (800)638-2041, or contact the 510k staff at (301)796-5640.

Sincerely,

510(k) Staff

Questions? Contact FDA/CDRH/OCE/DID at CDRH-FOISTATUS@fda.hhs.gov or call 301-796-8118.

Records processed under FOIA Request #2015-1305; Released by CDRH on 05-11-2016.

Mcdonald, Lisa *

From: Microsoft Outlook
To: frank.kadi@philips.com
Sent: Monday, February 11, 2013 2:36 PM
Subject: Relayed: K130077/S001 AI LETTER

Delivery to these recipients or groups is complete, but no delivery notification was sent by the destination server:

frank.kadi@philips.com (frank.kadi@philips.com)

Subject: K130077/S001 AI LETTER

Questions? Contact FDA/CDRH/OCE/DID at CDRH-FOISTATUS@fda.hhs.gov or call 301-796-8118.

Records processed under FOIA Request #2015-1305; Released by CDRH on 05-11-2016.

Food and Drug Administration
Office of Device Evaluation &
Office of In Vitro Diagnostics

COVER SHEET MEMORANDUM

From: Reviewer Name Amy LeVelle

Subject: 510(k) Number K130077

To: The Record

Please list CTS decision code RTA1

☑ Refused to accept (Note: this is considered the first review cycle, See Screening Checklist http://eroom.fda.gov/eRoomReq/Files/CDRH3/CDRHPremarketNotification510kProgram/0_5631/Screening%20Checklist%207%202%2007.doc)

☐ Hold (Additional Information or Telephone Hold).

☐ Final Decision (SE, SE with Limitations, NSE (select code below), Withdrawn, etc.).

Not Substantially Equivalent (NSE) Codes

☐	NO	NSE for lack of predicate
☐	NI	NSE for new intended use
☐	NQ	NSE for new technology that raises new questions of safety and effectiveness
☐	NU	NSE for new intended use AND new technology raising new questions of safety and effectiveness
☐	NP	NSE for lack of performance data
☐	NS	NSE no response
☐	NL	NSE for lack of performance data AND no response
☐	NM	NSE pre-amendment device call for PMAs (515i)
☐	NC	NSE post-amendment device requires PMAs
☐	NH	NSE for new molecular entity requires PMA
☐	TR	NSE for transitional device

Please complete the following for a final clearance decision (i.e., SE, SE with Limitations, etc.):		YES	NO
Indications for Use Page	*Attach IFU*		
510(k) Summary /510(k) Statement	*Attach Summary*		
Truthful and Accurate Statement.	*Must be present for a Final Decision*		
Is the device Class III?			
If yes, does firm include Class III Summary?	*Must be present for a Final Decision*		
Does firm reference standards? (If yes, please attach form from http://www.fda.gov/opacom/morechoices/fdaforms/FDA-3654.pdf)			
Is this a combination product? (Please specify category _____, see http://eroom.fda.gov/eRoomReq/Files/CDRH3/CDRHPremarketNotification510kProgram/0_413b/COMBINATION%20PRODUCT%20ALGORITHM%20(REVISED%203-12-03).DOC			
Is this a reprocessed single use device? (Guidance for Industry and FDA Staff – MDUFMA - Validation Data in 510(k)s for Reprocessed Single-Use Medical Devices, http://www.fda.gov/cdrh/ode/guidance/1216.html)			
Is this device intended for pediatric use only?			
Is this a prescription device? (If both prescription & OTC, check both boxes.)			
Did the application include a completed FORM FDA 3674, Certification with Requirements of ClinicalTrials.gov Data Bank?			
Is clinical data necessary to support the review of this 510(k)?			
For United States-based clinical studies **only**: Did the application include a completed FORM FDA 3674, *Certification with Requirements of ClinicalTrials.gov Data Bank*? (If study was			

Records processed under FOIA Request #2015-1305; Released by CDRH on 05-11-2016.

conducted in the United States, and FORM FDA 3674 was not included or incomplete, then applicant must be contacted to obtain completed form.)

Does this device include an Animal Tissue Source?

All Pediatric Patients age<=21

Neonate/Newborn (Birth to 28 days)

Infant (29 days -< 2 years old)

Child (2 years -< 12 years old)

Adolescent (12 years -< 18 years old)

Transitional Adolescent A (18 - <21 years old) Special considerations are being given to this group, different from adults age ≥ 21 (different device design or testing, different protocol procedures, etc.)

Transitional Adolescent B (18 -<= 21; No special considerations compared to adults => 21 years old)

Nanotechnology

Is this device subject to the Tracking Regulation? (Medical Device Tracking Guidance, http://www.fda.gov/cdrh/comp/guidance/169.html) *Contact OC.*

Regulation Number **Class*** **Product Code**

(*If unclassified, see 510(k) Staff)

Additional Product Codes:

Review:
(Branch Chief) (Branch Code) (Date)

Final Review:
(Division Director) (Date)

Questions? Contact FDA/CDRH/OCE/DID at CDRH-FOISTATUS@fda.hhs.gov or call 301-796-8118.

Records processed under FOIA Request #2015-1305; Released by CDRH on 05-11-2016.

510(k) "SUBSTANTIAL EQUIVALENCE" DECISION-MAKING PROCESS

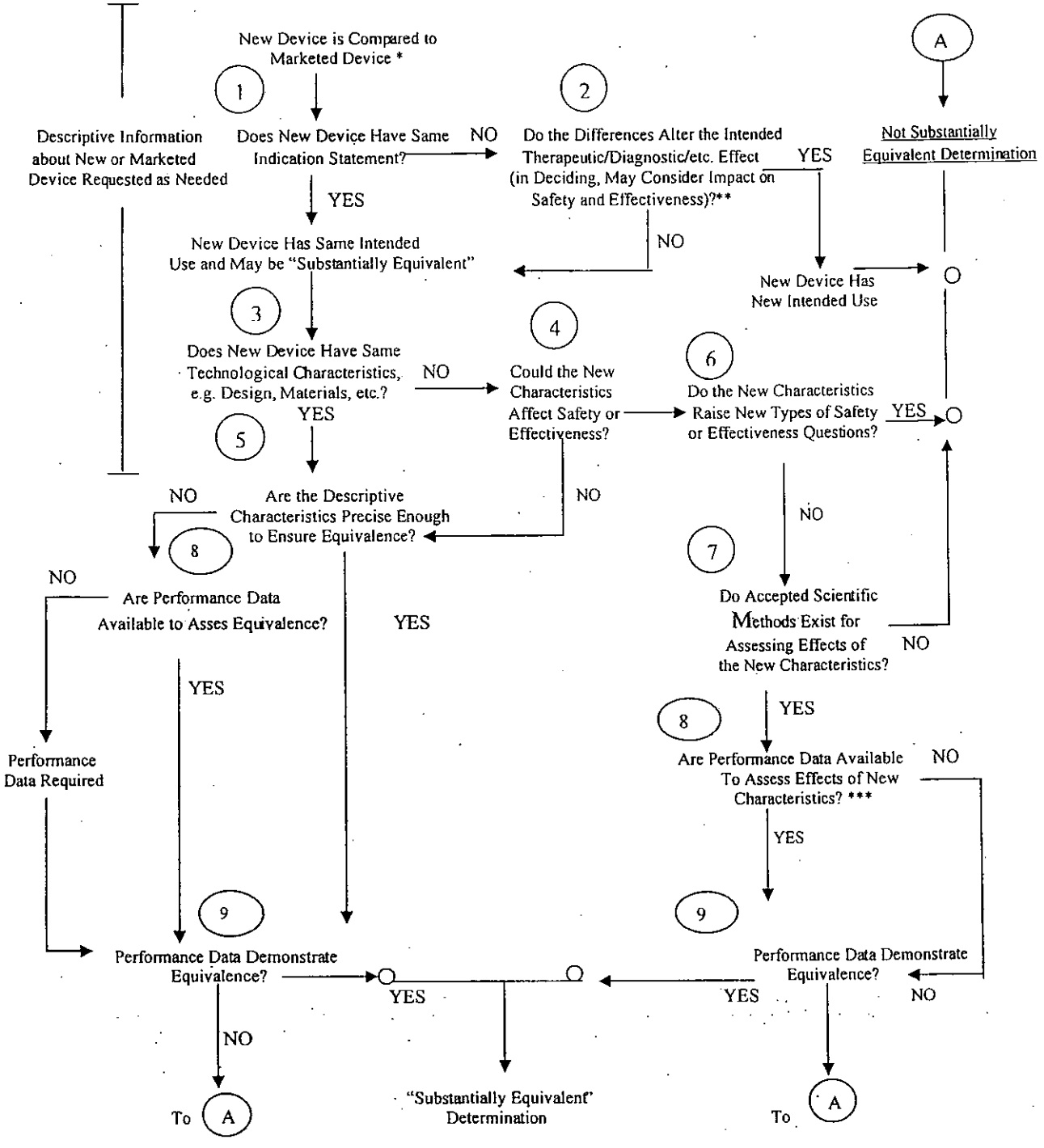

* 510(k) Submissions compare new devices to marketed devices. FDA requests additional information if the relationship between marketed and "predicate" (pre-Amendments or reclassified post-Amendments) devices is unclear.

** This decision is normally based on descriptive information alone, but limited testing information is sometimes required.

*** Data maybe in the 510(k), other 510(k)s, the Center's classification files, or the literature.

Questions? Contact FDA/CDRH/OCE/DID at CDRH-FOISTATUS@fda.hhs.gov or call 301-796-8118.

Records processed under FOIA Request #2015-1305; Released by CDRH on 05-11-2016.

Contains Nonbinding Recommendations

Appendix – Acceptance Checklists

Acceptance Checklist
for Traditional 510(k)s

(should be completed within 15 days of DCC receipt)

The following information is not intended to serve as a comprehensive review.

510(k) Number: ____K130077_____ **Date Received by DCC:** ____1/14/13_____

Lead Reviewer Name: ____Amy LeVelle_____ **Branch:** ___RPDB____ **Division:** __DAGRID____
Office: ___ODE____

Note: If an element is left blank on the checklist, it does not mean the checklist is incomplete; it means the reviewer did not assess the element during RTA and that element will be assessed during substantive review.

Preliminary Questions		
Answers in the shaded blocks indicate consultation with Center advisor is needed.	**Yes**	**No**
1. Is the product a device (per section 201(h) of the FD&C Act) or a combination product (per 21 CFR 3.2(e)) with a device constituent part subject to review in a 510(k)? If it appears not to be a device (per section 201(h) of the FD&C Act) or such a combination product, or you are unsure, consult with the CDRH Jurisdictional Officer or the CBER Office Jurisdiction Liaison to determine the appropriate action, and inform division management. *Provide a summary of the Jurisdictional Officer's/Liaison's determination.* If the product does not appear to be a device or such a combination product, mark "No."	X	
Comments:		
2. Is the application with the appropriate Center? If the product is a device or a combination product with a device constituent part, is it subject to review by the Center in which the submission was received? If you believe the application is not with the appropriate Center or you are unsure, consult with the CDRH Jurisdictional Officer or CBER Office Jurisdiction Liaison to determine the appropriate action and inform your division management. *Provide a summary of the Jurisdictional Officer's/Liaison's determination.* If application should not be reviewed by your Center mark "No."	X	
Comments:		

Questions? Contact FDA/CDRH/OCE/DID at CDRH-FOISTATUS@fda.hhs.gov or call 301-796-8118.

Records processed under FOIA Request #2015-1305; Released by CDRH on 05-11-2016.

3. If a Request for Designation (RFD) was submitted for the device or combination product with a device constituent part and assigned to your center, identify the RFD # and confirm the following: **a) Is the device or combination product the same (e.g., design, formulation) as that presented in the RFD submission?** **b) Are the indications for use for the device or combination product identified in the 510(k) the same as those identified in the RFD submission?** If you believe the product or the indications presented in the 510(k) have changed from the RFD, or you are unsure, consult with the CDRH Jurisdictional Officer or appropriate CBER Jurisdiction Liaison to determine the appropriate action and inform your division management. *Provide summary of Jurisdictional Officer's/Liaison's determination.* If the answer to either question above is no, mark "No." If there was no RFD, skip this question.		
Comments:		
4. Is this device type eligible for a 510(k) submission? If a 510(k) does not appear to be appropriate (e.g., Class III type and PMA required, or Class I or II type and 510(k)-exempt), you should consult with the CDRH 510(k) Program Director or appropriate CBER staff during the acceptance review. If 510(k) is not the appropriate regulatory submission, mark "No."	X	
Comments:		
5. Is there a pending PMA for the same device with the same indications for use? If yes, consult division management and the CDRH 510(k) Program Director or appropriate CBER staff to determine the appropriate action.		X
Comments:		
6. If clinical studies have been submitted, is the submitter the subject of an Application Integrity Policy (AIP)? If yes, consult with the CDRH Office of Compliance/Division of Bioresearch Monitoring (OC/DBM - BIMO) or CBER Office of Compliance and Biologics Quality/Division of Inspections and Surveillance/Bioresearch Monitoring Branch (OCBQ/DIS/BMB) to determine the appropriate action. Check on web at http://www.fda.gov/ICECI/EnforcementActions/ApplicationIntegrityPolicy/ucm134453.htm.		X

If the answer to 1 or 2 appears to be "No," then stop review of the 510(k) and issue the "Original Jurisdictional Product" letter. If the answer to 3a or 3b appears to be "No," then stop the review and contact the CDRH Jurisdictional Officer or CBER Office of Jurisdiction Liaison.

Questions? Contact FDA/CDRH/OCE/DID at CDRH-FOISTATUS@fda.hhs.gov or call 301-796-8118.

Records processed under FOIA Request #2015-1305; Released by CDRH on 05-11-2016.

If the answer to 4 is "No", the lead reviewer should consult division management and other Center resources to determine the appropriate action.
If the answer to 5 is "Yes," then stop review of the 510(k), contact the CDRH 510(k) Staff and PMA Staff, or appropriate CBER staff.
If the answer to 6 is "Yes," then contact CDRH/OC/DBM – BIMO or CBER/OCBQ/DIS/BMB, provide a summary of the discussion with the BIMO Staff, and indicate BIMO's recommendation/action.

Organizational Elements

Failure to include these items alone generally should not result in an RTA designation

	Yes	No
a. Submission contains Table of Contents	X	☐
b. Each section is labeled (e.g., headings or tabs designating Device Description section, Labeling section, etc.)	X	☐
c. All pages of the submission are numbered *All pages should be numbered in such a manner that information can be referenced by page number. This may be done either by consecutively numbering the entire submission, or numbering the pages within a section (e.g., 12-1, 12-2...).*	X	☐
d. Type of 510(k) is identified– traditional, abbreviated, or special *If type of 510(k) is not designated, review as a traditional*	X	☐
Comments: ***Although the submission is identified as a special 510(k), it has been converted to a traditional 510(k).***		

Elements of a Complete Submission (RTA Items) (21 CFR 807.87 unless otherwise indicated)

Submission should be designated RTA if not addressed

Check "Yes" if item is present, "N/A" if it is not needed and "No" if it is not included but needed.

			Yes	N/A	No
	• Any "No" answer will result in a "Refuse to Accept" decision. • Each element on the checklist should be addressed within the submission. The submitter may provide a rationale for omission for any criteria that are deemed not applicable. If a rationale is provided, the criterion is considered present (Yes). An assessment of the rationale will be considered during the review of the submission.				
A.	**Administrative**				
	1.	All content used to support the submission is written in English (including translations of test reports, literature articles, etc.)	X		☐
		Comments:			
	2.	Submission identifies the following (such as in CDRH Premarket Review Submission Cover Sheet (Form 3514) or 510(k) cover letter):	X		☐

Questions? Contact FDA/CDRH/OCE/DID at CDRH-FOISTATUS@fda.hhs.gov or call 301-796-8118.

Records processed under FOIA Request #2015-1305; Released by CDRH on 05-11-2016.

Elements of a Complete Submission (RTA Items) (21 CFR 807.87 unless otherwise indicated)

Submission should be designated RTA if not addressed

Check "Yes" if item is present, "N/A" if it is not needed and "No" if it is not included but needed.

				Yes	N/A	No
	• Any "No" answer will result in a "Refuse to Accept" decision. • Each element on the checklist should be addressed within the submission. The submitter may provide a rationale for omission for any criteria that are deemed not applicable. If a rationale is provided, the criterion is considered present (Yes). An assessment of the rationale will be considered during the review of the submission.					
		a.	Device trade name or proprietary name	X		☐
		b.	Device common name	X		☐
		c.	Device class and panel or Classification regulation or Statement that device has not been classified with rationale for that conclusion	X		☐
		Comments:				
	3.	Submission contains Indications for Use Statement with Rx and/or OTC designated (see also 21 CFR 801.109) *Submitter should use format appropriate for the reviewing Center/Office (CDRH/ODE, CDRH/OIVD, CBER/OBRR, CBER/OCTGT). If not provided in correct format, request the correct format during substantive review.*		X		☐
		Comments:				
	4.	Submission contains 510(k) Summary or 510(k) Statement *Either a) or b) must be answered "Yes" to be considered complete. Identify any missing element(s) in Comments.*		X		☐
		a.	Summary contains all elements per 21 CFR 807.92 *See also 510(k) Summary Checklist*	X	☐	☐
		b.	Statement contains all elements per 21 CFR 807.93	☐	X	☐
		Comments:				
	5.	Submission contains Truthful and Accuracy Statement per 21 CFR 807.87(k) *See recommended format. Select "Yes" if statement is present and includes the text in the recommended format, and is signed by a responsible person of the firm (not consultant).*		X		☐

Questions? Contact FDA/CDRH/OCE/DID at CDRH-FOISTATUS@fda.hhs.gov or call 301-796-8118.

Records processed under FOIA Request #2015-1305; Released by CDRH on 05-11-2016.

Elements of a Complete Submission (RTA Items)
(21 CFR 807.87 unless otherwise indicated)

Submission should be designated RTA if not addressed

Check "Yes" if item is present, "N/A" if it is not needed and "No" if it is not included but needed.

				Yes	N/A	No
		• Any "No" answer will result in a "Refuse to Accept" decision. • Each element on the checklist should be addressed within the submission. The submitter may provide a rationale for omission for any criteria that are deemed not applicable. If a rationale is provided, the criterion is considered present (Yes). An assessment of the rationale will be considered during the review of the submission.				
		Comments:				
	6.	Submission contains Class III Summary and Certification *See recommended content. Form should be signed by a responsible person of the firm, not a consultant. Select "N/A" only if submission is not a Class III 510(k).*		☐	X	☐
		Comments:				
	7.	Submission contains clinical data *Select "N/A" if the submission does not contain clinical data. If "N/A" is selected, parts a and b below are omitted from the checklist.*		☐	X	
		a.	Submission includes completed Financial Certification (FDA Form 3454) or Disclosure (FDA Form 3455) information for each covered clinical study included in the submission. *Select "N/A" if the submitted clinical data is not a "covered clinical study" as defined in the Guidance for Industry-Financial Disclosures by Clinical Investigators*	☐	☐	☐
		b.	Submission includes completed Certification of Compliance with requirements of ClinicalTrials.gov Data Bank (FDA Form 3674) (42 U.S.C. 282(j)(5)(B)) for each applicable device clinical trial included in the submission. *Select "N/A" if the submitted clinical data is not an "applicable device clinical trial" as defined in Title VIII of FDAAA, Sec. 801(j)*	☐	☐	☐
		Comments:				
	8.	If submission references use of a national or international standard as part of demonstration of substantial equivalence, submission contains complete Standards Data Report for 510(k)s (FDA Form 3654) *There should be a completed form for each referenced national or international standard.*		X	☐	☐

Questions? Contact FDA/CDRH/OCE/DID at CDRH-FOISTATUS@fda.hhs.gov or call 301-796-8118.

Records processed under FOIA Request #2015-1305; Released by CDRH on 05-11-2016.

Elements of a Complete Submission (RTA Items) (21 CFR 807.87 unless otherwise indicated)

Submission should be designated RTA if not addressed

Check "Yes" if item is present, "N/A" if it is not needed and "No" if it is not included but needed.

				Yes	N/A	No
	• Any "No" answer will result in a "Refuse to Accept" decision. • Each element on the checklist should be addressed within the submission. The submitter may provide a rationale for omission for any criteria that are deemed not applicable. If a rationale is provided, the criterion is considered present (Yes). An assessment of the rationale will be considered during the review of the submission.					
		Select "N/A" only if submission does not reference any standards.				
		Comments:				
	9.	The submission identifies prior submissions for the same device for which FDA provided feedback related to the data or information needed to support substantial equivalence (e.g., submission numbers for Pre-Submission, IDE, prior not substantially equivalent (NSE) determination, prior 510(k) that was deleted or withdrawn) or states that there were no prior submissions for the subject device. *This information may be included in the Cover Letter (i.e., as a statement that there were no prior submissions for the device or a listing of the number(s) of the prior submissions). Alternatively, a list of submission numbers may be found in Section F (prior related submissions section) of the CDRH Coversheet form (Form 3514) to address this criterion. Please be advised that if this section of the form is left blank, it should not be considered a statement that there were no prior submissions.*		X		☐
		a.	If there were prior submissions, the submitter has identified where in the current submission any issues related to a determination of substantial equivalence outlined in prior communications are addressed. *To address this criterion, the submission may include a separate section with the prior submission number(s), a copy of the FDA feedback (e.g., letter, meeting minutes), and a statement of how or where in the submission this prior feedback was addressed. Note that the adequacy of how the feedback was addressed should be assessed during the substantive review.* For additional information regarding the Pre-Submission process, please refer to the Draft Guidance "Medical Devices: The Pre-Submission Program and Meetings with FDA Staff." (http://www.fda.gov/MedicalDevices/DeviceRegulationandGuidance/GuidanceDocuments/ucm3	X	☐	☐

Questions? Contact FDA/CDRH/OCE/DID at CDRH-FOISTATUS@fda.hhs.gov or call 301-796-8118.

Records processed under FOIA Request #2015-1305; Released by CDRH on 05-11-2016.

Elements of a Complete Submission (RTA Items)
(21 CFR 807.87 unless otherwise indicated)

Submission should be designated RTA if not addressed

Check "Yes" if item is present, "N/A" if it is not needed and "No" if it is not included but needed.

				Yes	N/A	No
	• Any "No" answer will result in a "Refuse to Accept" decision. • Each element on the checklist should be addressed within the submission. The submitter may provide a rationale for omission for any criteria that are deemed not applicable. If a rationale is provided, the criterion is considered present (Yes). An assessment of the rationale will be considered during the review of the submission.					
			10375.htm). Once finalized, this guidance will represent the Agency's current thinking on this topic. *Select "N/A" if the submitter states there were no prior submissions in criterion above.*			
		Comments:				
B.	**Device Description**					
	10.	a.	If there are requirements regarding the device description, such as special controls, in a device-specific regulation that are applicable to the device, the submission includes device description information to establish that the submitter has followed the device-specific requirement. *Select "N/A" if there are no applicable requirements in a device-specific regulation. Select "No" if the submission does not include a rationale for any omitted information. Note that the adequacy of how such requirements have been addressed should be assessed during the substantive review.*	☐	X	☐
		b.	If there is a device-specific guidance, other than a special controls guidance document, applicable to the device, the submission includes device description information to establish that the submitter has addressed the recommendations or otherwise has met the applicable statutory or regulatory criteria through an alternative approach. *Select "N/A" if there is no applicable device-specific guidance. Select "No" if the submission does not include a rationale for any omitted information or any alternative approach as outlined above. Note that the adequacy of how recommendations in a device-specific guidance, etc., have been addressed should be assessed during the substantive review.*	☐	X	☐
		Comments:				

Questions? Contact FDA/CDRH/OCE/DID at CDRH-FOISTATUS@fda.hhs.gov or call 301-796-8118.

Records processed under FOIA Request #2015-1305; Released by CDRH on 05-11-2016.

Elements of a Complete Submission (RTA Items) (21 CFR 807.87 unless otherwise indicated)

Submission should be designated RTA if not addressed

Check "Yes" if item is present, "N/A" if it is not needed and "No" if it is not included but needed.

				Yes	N/A	No
	• Any "No" answer will result in a "Refuse to Accept" decision. • Each element on the checklist should be addressed within the submission. The submitter may provide a rationale for omission for any criteria that are deemed not applicable. If a rationale is provided, the criterion is considered present (Yes). An assessment of the rationale will be considered during the review of the submission.					
	11.	Descriptive information is present and consistent within the submission (e.g., the device description section is consistent with the device description in the labeling), including:				
		a.	A description of the principle of operation and mechanism of action for achieving the intended effect.	X		☐
		b.	A description of proposed conditions of use, such as surgical technique for implants; anatomical location of use; user interface; how the device interacts with other devices; and/or how the device interacts with the patient.	X		☐
		c.	A list and description of each device for which clearance is requested. *Select "N/A" if there is only one device or model. "Device" may refer to models, part numbers, or various sizes, etc.*	X	☐	☐
		Comments:				
	12.	Submission contains representative engineering drawing(s), schematics, illustrations and/or figures of the device that are clear, legible, labeled, and include dimensions. *In lieu of drawings, schematics, etc. of each device to be marketed, "representative" drawings, etc. may be provided, where "representative" is intended to mean that the drawings, etc. provided capture the differences in design, size, and other important characteristics of the various models, sizes, or versions of the device(s) to be marketed.* *Select "N/A" if the submitter provided a rationale for why the submission does not contain engineering drawings, schematics, etc. (e.g., device is a reagent and figures are not pertinent to describe the device).*			X	☐	☐
		Comments:				

Questions? Contact FDA/CDRH/OCE/DID at CDRH-FOISTATUS@fda.hhs.gov or call 301-796-8118.

Records processed under FOIA Request #2015-1305; Released by CDRH on 05-11-2016.

Elements of a Complete Submission (RTA Items)
(21 CFR 807.87 unless otherwise indicated)

Submission should be designated RTA if not addressed

Check "Yes" if item is present, "N/A" if it is not needed and "No" if it is not included but needed.

				Yes	N/A	No
	• Any "No" answer will result in a "Refuse to Accept" decision. • Each element on the checklist should be addressed within the submission. The submitter may provide a rationale for omission for any criteria that are deemed not applicable. If a rationale is provided, the criterion is considered present (Yes). An assessment of the rationale will be considered during the review of the submission.					
	13.	If device is intended to be marketed with multiple components, accessories, and/or as part of a system, *Select "N/A" if the device is not intended to be marketed with multiple components, accessories, and/or as part of a system.*			X	
		a.	Submission includes a list of all components and accessories to be marketed with the subject device.	☐		☐
		b.	Submission includes a description (as detailed in item 11.a. and b. and 12 above) of each component or accessory. *Select "N/A" if the component(s)/accessory(ies) has been previously cleared, or is exempt, and the proposed indications for use are consistent with the cleared indications.*	☐	☐	☐
		c.	A 510(k) number is provided for each component or accessory that received a prior 510(k) clearance. *Select "N/A" if the submission states that the component(s)/ accessory(ies) does not have a prior 510(k) clearance or the component(s)/accessory(ies) is 510(k) exempt.*	☐	☐	☐
		Comments:				
C.	**Substantial Equivalence Discussion**					
	14.	Submitter has identified a predicate(s) device		X		☐
		a.	Predicate's 510(k) number, trade name, and model number (if applicable) provided. For predicates that are preamendments devices, information is provided to document preamendments status. *Information regarding documenting preamendment status is available online (http://www.fda.gov/MedicalDevices/DeviceRegulationandGuidan*	X		☐

Questions? Contact FDA/CDRH/OCE/DID at CDRH-FOISTATUS@fda.hhs.gov or call 301-796-8118.

Records processed under FOIA Request #2015-1305; Released by CDRH on 05-11-2016.

Elements of a Complete Submission (RTA Items)
(21 CFR 807.87 unless otherwise indicated)

Submission should be designated RTA if not addressed

Check "Yes" if item is present, "N/A" if it is not needed and "No" if it is not included but needed.

				Yes	N/A	No
	• Any "No" answer will result in a "Refuse to Accept" decision. • Each element on the checklist should be addressed within the submission. The submitter may provide a rationale for omission for any criteria that are deemed not applicable. If a rationale is provided, the criterion is considered present (Yes). An assessment of the rationale will be considered during the review of the submission.					
			ce/ComplianceActivities/ucm072746.htm).			
		b.	The identified predicate(s) is consistent throughout the submission (i.e., the predicate(s) identified in the Substantial Equivalence section is the same as that listed in the 510(k) Summary (if applicable) and that used in comparative performance testing.	X		☐
		Comments:				
	15.	Submission includes a comparison of the following for the predicate(s) and subject device				
		a.	Indications for use	X		☐
		b.	Technology, including features, materials, and principles of operation	X		☐
		Comments:				
	16.	Submission includes an analysis of why any differences between the subject device and predicate(s) do not render the device NSE (e.g., does not constitute a new intended use; and any differences in technological characteristics are accompanied by information that demonstrates the device is as safe and effective as the predicate and do not raise different questions of safety and effectiveness than the predicate), affect safety or effectiveness, or raise different questions of safety and effectiveness (see section 513(i)(1)(A) of the FD&C Act and 21 CFR 807.87(f)) *If there is no difference between the subject and predicate(s) with respect to indications for use or technology, this should be explicitly stated, in which case "N/A" should be selected. Select "No" only if the submission does not include an analysis of differences as described above or a statement that there are no differences. Note that the adequacy of the analysis should be assessed during the substantive review; only the presence of such an analysis is required for acceptance. In addition, note that due to potential differences in*		X	☐	☐

Questions? Contact FDA/CDRH/OCE/DID at CDRH-FOISTATUS@fda.hhs.gov or call 301-796-8118.

Records processed under FOIA Request #2015-1305; Released by CDRH on 05-11-2016.

Elements of a Complete Submission (RTA Items) **(21 CFR 807.87 unless otherwise indicated)** Submission should be designated RTA if not addressed					
Check "Yes" if item is present, "N/A" if it is not needed and "No" if it is not included but needed.					
	• Any "No" answer will result in a "Refuse to Accept" decision. • Each element on the checklist should be addressed within the submission. The submitter may provide a rationale for omission for any criteria that are deemed not applicable. If a rationale is provided, the criterion is considered present (Yes). An assessment of the rationale will be considered during the review of the submission.			**Yes**	**N/A**	**No**
		manufacturing that may not be known to the submitter, the fact that no differences are identified does not necessarily mean that no performance testing is needed.				
		Comments:				
D.	**Proposed Labeling (see also 21 CFR part 801)** *If in vitro diagnostic (IVD) device, criteria 17, 18, and 19 may be omitted. These criteria will be omitted from the checklist if "N/A" is selected. IVD labeling is addressed in section 21 below.*				☐	
	17.	Submission includes proposed package labels and labeling (e.g., instructions for use, package insert, operator's manual) that include a description of the device, its intended use, and the directions for use		X		☐
		a.	Indications for use are stated in labeling and are identical to Indications for Use form and 510(k) Summary (if 510(k) Summary provided)	X		☐
		b.	Submission includes directions for use that - include statements of all conditions, purposes or uses for which the device is intended (e.g., hazards, warnings, precautions, contraindications) (21 CFR 801.5) AND - Includes directions for layperson (see 21 CFR 801.5) OR submission states that device qualifies for exemption per 21 CFR 801 Subpart D	X		☐
		Comments:				
	18.	If indicated for prescription use, labeling includes the prescription use statement (see 21 CFR 801.109(b)(1)) or "Rx only" symbol [See also Alternative to Certain Prescription Device Labeling Requirements] *Select "N/A" if not indicated for prescription use.*		X	☐	☐

Questions? Contact FDA/CDRH/OCE/DID at CDRH-FOISTATUS@fda.hhs.gov or call 301-796-8118.

Records processed under FOIA Request #2015-1305; Released by CDRH on 05-11-2016.

Elements of a Complete Submission (RTA Items)
(21 CFR 807.87 unless otherwise indicated)

Submission should be designated RTA if not addressed

Check "Yes" if item is present, "N/A" if it is not needed and "No" if it is not included but needed.

				Yes	N/A	No
	• Any "No" answer will result in a "Refuse to Accept" decision. • Each element on the checklist should be addressed within the submission. The submitter may provide a rationale for omission for any criteria that are deemed not applicable. If a rationale is provided, the criterion is considered present (Yes). An assessment of the rationale will be considered during the review of the submission.					
		Comments:				
	19.	General labeling provisions				
		a.	Labeling includes name and place of business of the manufacturer, packer, or distributor (21 CFR 801.1)	X		☐
		b.	Labeling includes device common or usual name (21 CFR 801.61) *Select "N/A" if device is for prescription use only.*	X	☐	☐
		Comments:				
	20.	a.	If there are requirements regarding labeling, such as special controls, in a device-specific regulation that are applicable to the device, the submission includes labeling to establish that the submitter has followed the device-specific requirement. *Select "N/A" if there are no applicable requirements in a device-specific regulation. Select "No" if the submission does not include a rationale for any omitted information. Note that the adequacy of how such requirements have been addressed should be assessed during the substantive review.*	☐	X	☐
		b.	If there is a device-specific guidance, other than a special controls guidance document, applicable to the device, the submission includes labeling to establish that the submitter has addressed the recommendations or otherwise has met the applicable statutory or regulatory criteria through an alternative approach. *Select "N/A" if there is no applicable device-specific guidance. Select "No" if the submission does not include a rationale for any omitted information or any alternative approach as outlined above. Note that the adequacy of how recommendations in a device-specific guidance have been addressed should be assessed during the substantive review.*	☐	X	☐
		c.	If there is a special controls document applicable to the device,	☐	X	☐

Questions? Contact FDA/CDRH/OCE/DID at CDRH-FOISTATUS@fda.hhs.gov or call 301-796-8118.

Records processed under FOIA Request #2015-1305; Released by CDRH on 05-11-2016.

Elements of a Complete Submission (RTA Items)
(21 CFR 807.87 unless otherwise indicated)

Submission should be designated RTA if not addressed

Check "Yes" if item is present, "N/A" if it is not needed and "No" if it is not included but needed.

				Yes	N/A	No
	• Any "No" answer will result in a "Refuse to Accept" decision. • Each element on the checklist should be addressed within the submission. The submitter may provide a rationale for omission for any criteria that are deemed not applicable. If a rationale is provided, the criterion is considered present (Yes). An assessment of the rationale will be considered during the review of the submission.					
			the submission includes labeling to establish that the submitter has complied with the particular mitigation measures set forth in the special controls document or uses alternative mitigation measures but provides a rationale to demonstrate that those alternative measures identified by the firm will provide at least an equivalent assurance of safety and effectiveness. *Select "N/A" if there is no applicable special controls document. Select "No" if the submission does not include a rationale for any omitted information or any alternative approach as outlined above. Note that the adequacy of how mitigation measures in a special controls document have been addressed should be assessed during the substantive review.*			
		Comments:				
	21.	If the device is an in vitro diagnostic device, provided labeling includes all applicable information required per 21 CFR 809.10. *Select "N/A" if not an in vitro diagnostic device.*		☐	X	☐
E.	**Sterilization** *If in vitro diagnostic (IVD) device and sterilization is not applicable, select "N/A." The criteria in this section will be omitted from the checklist if "N/A" is selected.*				☐	
	Submission states that the device and/or accessories are: (*one of the below must be checked*) ☐ provided sterile ☐ provided non-sterile but sterilized by the end user X non-sterile when used This information will determine whether and what type of additional information may be necessary for a substantial equivalence determination. *If "non-sterile when used" is selected, the sterility-related criteria below are omitted from the checklist.* *If information regarding the sterility status of the device is not provided, select "No."*					☐

Questions? Contact FDA/CDRH/OCE/DID at CDRH-FOISTATUS@fda.hhs.gov or call 301-796-8118.

Records processed under FOIA Request #2015-1305; Released by CDRH on 05-11-2016.

Elements of a Complete Submission (RTA Items)
(21 CFR 807.87 unless otherwise indicated)

Submission should be designated RTA if not addressed

Check "Yes" if item is present, "N/A" if it is not needed and "No" if it is not included but needed.

				Yes	N/A	No
	• Any "No" answer will result in a "Refuse to Accept" decision. • Each element on the checklist should be addressed within the submission. The submitter may provide a rationale for omission for any criteria that are deemed not applicable. If a rationale is provided, the criterion is considered present (Yes). An assessment of the rationale will be considered during the review of the submission.					
	Comments:					
	22.	Assessment of the need for sterilization information			X	
		a.	Identification of device, and/or accessories, and/or components that are provided sterile.	☐		☐
		b.	Identification of device, and/or accessories, and/or components that are end user sterilized	☐		☐
		c.	Identification of device, and/or accessories, and/or components that are reusable and cleaning/disinfection instructions are provided.	☐		☐
		Comments:				
	23.	If the device, and/or accessory, and/or a component is provided sterile: *Select "N/A" if no part of the device, accessories, or components is provided sterile, otherwise complete a-e below.*			X	
		a.	Sterilization method is stated for each component (including parameters such as dry time for steam sterilization, radiation dose, etc.)	☐		☐
		b.	A description of method to validate the sterilization parameters (e.g., half-cycle method and full citation of FDA-recognized standard, including date) is provided for each proposed sterilization method. *Note, the sterilization validation report is not required.*	☐		☐
		c.	For devices sterilized using chemical sterilants such as ethylene oxide (EO) and hydrogen peroxide, submission states maximum levels of sterilant residuals remaining on the device and sterilant residual limits. *Select "N/A" if not sterilized using chemical sterilants.*	☐	☐	☐

Questions? Contact FDA/CDRH/OCE/DID at CDRH-FOISTATUS@fda.hhs.gov or call 301-796-8118.

Records processed under FOIA Request #2015-1305; Released by CDRH on 05-11-2016.

Elements of a Complete Submission (RTA Items)
(21 CFR 807.87 unless otherwise indicated)

Submission should be designated RTA if not addressed

Check "Yes" if item is present, "N/A" if it is not needed and "No" if it is not included but needed.

				Yes	N/A	No
	• Any "No" answer will result in a "Refuse to Accept" decision. • Each element on the checklist should be addressed within the submission. The submitter may provide a rationale for omission for any criteria that are deemed not applicable. If a rationale is provided, the criterion is considered present (Yes). An assessment of the rationale will be considered during the review of the submission.					
		d.	Submission includes description of packaging and packaging contents (e.g., if multiple devices are included within the same package, Tyvek packaging, etc.)	☐		☐
		e.	Sterility Assurance Level (SAL) stated	☐		☐
		Comments:				
	24.	If the device, and/or accessory, and/or a component is end user sterilized: *Select "N/A" if no part of the device, accessories, or components are end user sterilized, otherwise complete a-d below.*			X	
		a.	Sterilization method is stated for each component (including parameters such as dry time for steam sterilization, radiation dose, etc.)	☐		☐
		b.	A description of method to validate the sterilization parameters (e.g., half-cycle method and full citation of FDA-recognized standard, including date) is provided for each proposed sterilization method. *Note, the sterilization validation is not required.*	☐		☐
		c.	Submission includes description of packaging and packaging contents (e.g., if multiple devices are included within the same package, Tyvek packaging, etc.)	☐		☐
		d.	Submission includes sterilization instructions for end user	☐		☐
		Comments:				
	25.	a.	If there are requirements regarding sterility, such as special controls, in a device-specific regulation that are applicable to the device, the submission includes sterility information to establish that the submitter has followed the device-specific requirement. *Select "N/A" if there are no applicable requirements in a device-*	☐	X	☐

Questions? Contact FDA/CDRH/OCE/DID at CDRH-FOISTATUS@fda.hhs.gov or call 301-796-8118.

Records processed under FOIA Request #2015-1305; Released by CDRH on 05-11-2016.

Elements of a Complete Submission (RTA Items)
(21 CFR 807.87 unless otherwise indicated)

Submission should be designated RTA if not addressed

Check "Yes" if item is present, "N/A" if it is not needed and "No" if it is not included but needed.

				Yes	N/A	No
	• Any "No" answer will result in a "Refuse to Accept" decision. • Each element on the checklist should be addressed within the submission. The submitter may provide a rationale for omission for any criteria that are deemed not applicable. If a rationale is provided, the criterion is considered present (Yes). An assessment of the rationale will be considered during the review of the submission.					
			specific regulation. Select "No" if the submission does not include a rationale for any omitted information. Note that the adequacy of how such requirements have been addressed should be assessed during the substantive review.			
		b.	If there is a device-specific guidance, other than a special controls guidance document, applicable to the device, the submission includes sterility information to establish that the submitter has addressed the recommendations or otherwise has met the applicable statutory or regulatory criteria through an alternative approach. *Select "N/A" if there is no applicable device-specific guidance. Select "No" if the submission does not include a rationale for any omitted information or any alternative approach as outlined above. Note that the adequacy of how recommendations in a device-specific guidance have been addressed should be assessed during the substantive review.*	☐	X	☐
		c.	If there is a special controls document applicable to the device, the submission includes sterility information to establish that the submitter has complied with the particular mitigation measures set forth in the special controls document or uses alternative mitigation measures but provides a rationale to demonstrate that those alternative measures identified by the firm will provide at least an equivalent assurance of safety and effectiveness. *Select "N/A" if there is no applicable special controls document. Select "No" if the submission does not include a rationale for any omitted information or any alternative approach as outlined above. Note that the adequacy of how mitigation measures in a special controls document have been addressed should be assessed during the substantive review.*		X	
		Comments:				

Questions? Contact FDA/CDRH/OCE/DID at CDRH-FOISTATUS@fda.hhs.gov or call 301-796-8118.

Records processed under FOIA Request #2015-1305; Released by CDRH on 05-11-2016.

Elements of a Complete Submission (RTA Items)
(21 CFR 807.87 unless otherwise indicated)

Submission should be designated RTA if not addressed

Check "Yes" if item is present, "N/A" if it is not needed and "No" if it is not included but needed.

			Yes	N/A	No
		• Any "No" answer will result in a "Refuse to Accept" decision. • Each element on the checklist should be addressed within the submission. The submitter may provide a rationale for omission for any criteria that are deemed not applicable. If a rationale is provided, the criterion is considered present (Yes). An assessment of the rationale will be considered during the review of the submission.			
F.	**Shelf Life**				
	26.	Proposed shelf life/ expiration date stated *Select "N/A" if the device is not provided sterile and the submitter states that storage conditions could not affect device safety or effectiveness.*	☐	X	☐
		Comments:			
	27.	For sterile device, submission includes summary of methods used to establish that device sterility will remain substantially equivalent to that of the predicate through the proposed shelf life, or a rationale for why testing to establish shelf life is not applicable. *Select "N/A" if the device is not provided sterile.*	☐	X	☐
		Comments:			
	28.	Submission includes summary of methods used to establish that device performance is not adversely affected by aging and therefore device performance will remain substantially equivalent to that of the predicate, or includes a rationale for why the storage conditions are not expected to affect device safety or effectiveness.	☐	X	☐
		Comments:			
G.	**Biocompatibility** *If in vitro diagnostic (IVD) device, select "N/A." The criteria in this section will be omitted from the checklist if "N/A" is selected.*			☐	

Questions? Contact FDA/CDRH/OCE/DID at CDRH-FOISTATUS@fda.hhs.gov or call 301-796-8118.

Records processed under FOIA Request #2015-1305; Released by CDRH on 05-11-2016.

Elements of a Complete Submission (RTA Items)
(21 CFR 807.87 unless otherwise indicated)

Submission should be designated RTA if not addressed

Check "Yes" if item is present, "N/A" if it is not needed and "No" if it is not included but needed.

			Yes	N/A	No
	• Any "No" answer will result in a "Refuse to Accept" decision. • Each element on the checklist should be addressed within the submission. The submitter may provide a rationale for omission for any criteria that are deemed not applicable. If a rationale is provided, the criterion is considered present (Yes). An assessment of the rationale will be considered during the review of the submission.				
	Submission states that there: (*one of the below must be checked*) X are ☐ are not direct or indirect (e.g., through fluid infusion) patient-contacting components. This information will determine whether and what type of additional information may be necessary for a substantial equivalence determination. *If "are not" is selected, the biocompatibility-related criteria below are omitted from the checklist. If information regarding whether the device is patient-contacting is not provided, select "No."*				☐
	Comments:				
	29.	Submission includes list of patient-contacting device components and associated materials of construction, including identification of color additives, if present	X		☐
		Comments:			
	30.	Submission identifies contact classification (e.g., surface-contacting, less than 24 hour duration)	X		☐
		Comments:			

Questions? Contact FDA/CDRH/OCE/DID at CDRH-FOISTATUS@fda.hhs.gov or call 301-796-8118.

Records processed under FOIA Request #2015-1305; Released by CDRH on 05-11-2016.

Elements of a Complete Submission (RTA Items)
(21 CFR 807.87 unless otherwise indicated)

Submission should be designated RTA if not addressed

Check "Yes" if item is present, "N/A" if it is not needed and "No" if it is not included but needed.

			Yes	N/A	No
		• Any "No" answer will result in a "Refuse to Accept" decision. • Each element on the checklist should be addressed within the submission. The submitter may provide a rationale for omission for any criteria that are deemed not applicable. If a rationale is provided, the criterion is considered present (Yes). An assessment of the rationale will be considered during the review of the submission.			
	31.	Biocompatibility assessment of patient-contacting components Submission includes: Test protocol (including identification and description of test article), methods, pass/fail criteria, and results provided for each completed test, OR a statement that biocompatibility testing is not needed with a rationale (e.g., materials and manufacturing/processing are identical to the predicate).	☐		X
		Comments: Please provide complete test protocols for biocompatibility testing and extraction studies used to assess biocompatibility of your device.			
H.	**Software**				
	Submission states that the device: (*one of the below must be checked*) X does ☐ does not contain software/firmware. This information will determine whether and what type of additional information may be necessary for a substantial equivalence determination. *If "does not" is selected, the software-related criterion is omitted from the checklist. If information regarding whether the device contains software is not provided, select "No."*				☐
	32.	Submission includes a statement of software level of concern and rationale for the software level of concern	☐	X	☐
		Comments:			
	33.	All applicable software documentation provided based on level of concern identified by the submitter, as described in Guidance for the Content of Premarket Submissions for Software Contained in Medical	☐	X	☐

Questions? Contact FDA/CDRH/OCE/DID at CDRH-FOISTATUS@fda.hhs.gov or call 301-796-8118.

Records processed under FOIA Request #2015-1305; Released by CDRH on 05-11-2016.

Elements of a Complete Submission (RTA Items)
(21 CFR 807.87 unless otherwise indicated)

Submission should be designated RTA if not addressed

Check "Yes" if item is present, "N/A" if it is not needed and "No" if it is not included but needed.

			Yes	N/A	No
	• Any "No" answer will result in a "Refuse to Accept" decision. • Each element on the checklist should be addressed within the submission. The submitter may provide a rationale for omission for any criteria that are deemed not applicable. If a rationale is provided, the criterion is considered present (Yes). An assessment of the rationale will be considered during the review of the submission.				
		Devices, or the submission includes information to establish that the submitter has otherwise met the applicable statutory or regulatory criteria through an alternative approach (i.e., the submitter has identified an alternate approach with a rationale).			
		Comments:			
I.	**EMC and Electrical Safety**				
	Submission states that the device: (*one of the below must be checked*) ☐ does X does not require EMC and Electrical Safety evaluation. This information will determine whether and what type of additional information may be necessary for a substantial equivalence determination. *If "does not" is selected, the EMC-related and Electrical Safety-related criteria below are omitted from the checklist. If information regarding whether the device requires EMC and Electrical Safety evaluation is not provided, select "No."*				☐
	Comments:				
	34.	Submission includes evaluation of electrical safety (e.g., per IEC 60601-1, or equivalent FDA-recognized standard, and if applicable, the device-specific standard), OR submission includes electrical safety evaluation using methods or standards that are not FDA-recognized and submission includes information to establish that the submitter has otherwise met the applicable statutory or regulatory criteria through this alternative approach (i.e., the submitter has identified alternate methods or standards with a rationale).	☐	X	☐
		Comments:			

Questions? Contact FDA/CDRH/OCE/DID at CDRH-FOISTATUS@fda.hhs.gov or call 301-796-8118.

Records processed under FOIA Request #2015-1305; Released by CDRH on 05-11-2016.

Elements of a Complete Submission (RTA Items) **(21 CFR 807.87 unless otherwise indicated)** Submission should be designated RTA if not addressed					
Check "Yes" if item is present, "N/A" if it is not needed and "No" if it is not included but needed.					
	• Any "No" answer will result in a "Refuse to Accept" decision. • Each element on the checklist should be addressed within the submission. The submitter may provide a rationale for omission for any criteria that are deemed not applicable. If a rationale is provided, the criterion is considered present (Yes). An assessment of the rationale will be considered during the review of the submission.			**Yes**	**N/A**	**No**
	35.		Submission includes evaluation of electromagnetic compatibility (e.g., per IEC 60601-1-2 or equivalent FDA-recognized standard and if applicable, the device-specific standard) OR submission includes electromagnetic compatibility evaluation using methods or standards that are not FDA-recognized and submission includes information to establish that the submitter has otherwise met the applicable statutory or regulatory criteria through this alternative approach (i.e., the submitter has identified alternate methods or standards with a rationale).	☐	X	☐
		Comments:				
J.	**Performance Data – General** *If in vitro diagnostic (IVD) device, select "N/A." The criteria in this section will be omitted from the checklist if "N/A" is selected. Performance data criteria relating to IVD devices will be addressed in Section K.*				☐	
	Comments:					
	36.		Full test report is provided for each completed test. A full test report includes: objective of the test, description of the test methods and procedures, study endpoint(s), pre- defined pass/fail criteria, results summary, conclusions, and an explanation of how the data generated from the test supports a finding of substantial equivalence. *Full test reports provided for all completed tests/evaluations (e.g., bench evaluations, comparative performance tests, etc.). Select "N/A" if the submission does not include performance data.*	☐	X	☐
		Comments:				
	37.	a.	If there are requirements regarding performance data, such as special controls, in a device-specific regulation that are applicable	☐	X	☐

Questions? Contact FDA/CDRH/OCE/DID at CDRH-FOISTATUS@fda.hhs.gov or call 301-796-8118.

Records processed under FOIA Request #2015-1305; Released by CDRH on 05-11-2016.

Elements of a Complete Submission (RTA Items) **(21 CFR 807.87 unless otherwise indicated)** Submission should be designated RTA if not addressed						
Check "Yes" if item is present, "N/A" if it is not needed and "No" if it is not included but needed.						
	• Any "No" answer will result in a "Refuse to Accept" decision. • Each element on the checklist should be addressed within the submission. The submitter may provide a rationale for omission for any criteria that are deemed not applicable. If a rationale is provided, the criterion is considered present (Yes). An assessment of the rationale will be considered during the review of the submission.			**Yes**	**N/A**	**No**
			to the device, the submission includes performance data to establish that the submitter has followed the device-specific requirement. *Select "N/A" if there are no applicable requirements in a device-specific regulation. Select "No" if the submission does not include a rationale for any omitted information. Note that the adequacy of how such requirements have been addressed should be assessed during the substantive review.*			
		b.	If there is a device-specific guidance, other than a special controls guidance document, applicable to the device, the submission includes performance data to establish that the submitter has addressed the recommendations or otherwise has met the applicable statutory or regulatory criteria through an alternative approach. *Select "N/A" if there is no applicable device-specific guidance. Select "No" if the submission does not include a rationale for any omitted information or any alternative approach as outlined above. Note that the adequacy of how recommendations in a device-specific guidance have been addressed should be assessed during the substantive review.*		☐	X	☐
		c.	If there is a special controls document applicable to the device, the submission includes performance data to establish that the submitter has complied with the particular mitigation measures set forth in the special controls document or uses alternative mitigation measures but provides a rationale to demonstrate that those alternative measures identified by the firm will provide at least an equivalent assurance of safety and effectiveness. *Select "N/A" if there is no applicable special controls document. Select "No" if the submission does not include a rationale for any omitted information or any alternative approach as outlined above. Note that the adequacy of how mitigation measures in a*		☐	X	☐

Questions? Contact FDA/CDRH/OCE/DID at CDRH-FOISTATUS@fda.hhs.gov or call 301-796-8118.

Records processed under FOIA Request #2015-1305; Released by CDRH on 05-11-2016.

Elements of a Complete Submission (RTA Items)
(21 CFR 807.87 unless otherwise indicated)

Submission should be designated RTA if not addressed

Check "Yes" if item is present, "N/A" if it is not needed and "No" if it is not included but needed.

				Yes	N/A	No
	• Any "No" answer will result in a "Refuse to Accept" decision. • Each element on the checklist should be addressed within the submission. The submitter may provide a rationale for omission for any criteria that are deemed not applicable. If a rationale is provided, the criterion is considered present (Yes). An assessment of the rationale will be considered during the review of the submission.					
			special controls document have been addressed should be assessed during the substantive review.			
		Comments:				
	38.	If literature is referenced in the submission, submission includes: *Select "N/A" if the submission does not reference literature. Note that the applicability of the referenced article to support a substantial equivalence finding should be assessed during the substantive review; only the presence of a discussion is required to support acceptance.*			X	
		a.	Legible reprints or a summary of each article	☐		☐
		b.	Discussion of how each article is applicable to support the substantial equivalence of the subject device to the predicate.	☐		☐
		Comments:				
	39.	For each completed nonclinical (i.e., animal) study conducted, *Select "N/A" if no animal study was conducted. Note that this section does not address biocompatibility evaluations, which are assessed in Section G of the checklist,*			X	
		a.	Submission includes a study protocol which includes all elements as outlined in 21 CFR 58.120	☐		☐
		b.	Submission includes final study report which includes all elements outlined in 21 CFR 58.185	☐		☐
		c.	Submission contains a statement that the study was conducted in compliance with applicable requirements in the GLP regulation (21 CFR Part 58), or, if the study was not conducted in compliance with the GLP regulation, the submission explains why the noncompliance would not impact the validity of the study data provided to support a substantial equivalence	☐		☐

Questions? Contact FDA/CDRH/OCE/DID at CDRH-FOISTATUS@fda.hhs.gov or call 301-796-8118.

Records processed under FOIA Request #2015-1305; Released by CDRH on 05-11-2016.

Elements of a Complete Submission (RTA Items) (21 CFR 807.87 unless otherwise indicated)

Submission should be designated RTA if not addressed

Check "Yes" if item is present, "N/A" if it is not needed and "No" if it is not included but needed.

				Yes	N/A	No
	• Any "No" answer will result in a "Refuse to Accept" decision. • Each element on the checklist should be addressed within the submission. The submitter may provide a rationale for omission for any criteria that are deemed not applicable. If a rationale is provided, the criterion is considered present (Yes). An assessment of the rationale will be considered during the review of the submission.					
			determination.			
		Comments:				
K.	**Performance Characteristics – In Vitro Diagnostic Devices Only (see also 21 CFR 809.10(b)(12))**					
	Submission indicates that device: (*one of the below must be checked*) ☐ is X is not an in vitro diagnostic device (IVD). *If "is not" is selected, the performance data-related criteria below are omitted from the checklist.*					
	Comments:					
	40.	Submission includes the following studies, as appropriate for the device type, including associated protocol descriptions, study results and line data:				
		a.	Precision/reproducibility	☐	☐	☐
		b.	Accuracy (includes as appropriate linearity; calibrator or assay traceability; calibrator and/or assay stability protocol and acceptance criteria; assay cut-off; method comparison or comparison to clinical outcome; matrix comparison; and clinical reference range or cutoff.	☐	☐	☐
		c.	Sensitivity (detection limits, LoB, LoD, LoQ where relevant for the device type).	☐	☐	☐
		d.	Analytical specificity	☐	☐	☐
		Comments:				
	41.	a.	If there are requirements regarding performance data, such as special controls, in a device-specific regulation that are applicable	☐	☐	☐

Questions? Contact FDA/CDRH/OCE/DID at CDRH-FOISTATUS@fda.hhs.gov or call 301-796-8118.

Records processed under FOIA Request #2015-1305; Released by CDRH on 05-11-2016.

Elements of a Complete Submission (RTA Items) **(21 CFR 807.87 unless otherwise indicated)** Submission should be designated RTA if not addressed						
Check "Yes" if item is present, "N/A" if it is not needed and "No" if it is not included but needed.						
	• Any "No" answer will result in a "Refuse to Accept" decision. • Each element on the checklist should be addressed within the submission. The submitter may provide a rationale for omission for any criteria that are deemed not applicable. If a rationale is provided, the criterion is considered present (Yes). An assessment of the rationale will be considered during the review of the submission.			**Yes**	**N/A**	**No**
			to the device, the submission includes performance data to establish that the submitter has followed the device-specific requirement. *Select "N/A" if there are no applicable requirements in a device-specific regulation. Select "No" if the submission does not include a rationale for any omitted information. Note that the adequacy of how such requirements have been addressed should be assessed during the substantive review.*			
		b.	If there is a device-specific guidance, other than a special controls guidance document, applicable to the device, the submission includes performance data to establish that the submitter has addressed the recommendations or otherwise has met the applicable statutory or regulatory criteria through an alternative approach. *Select "N/A" if there is no applicable device-specific guidance. Select "No" if the submission does not include a rationale for any omitted information or any alternative approach as outlined above. Note that the adequacy of how recommendations in a device-specific guidance have been addressed should be assessed during the substantive review.*	☐	☐	☐
		c.	If there is a special controls document applicable to the device, the submission includes performance data to establish that the submitter has complied with the particular mitigation measures set forth in the special controls document or uses alternative mitigation measures but provides a rationale to demonstrate that those alternative measures identified by the firm will provide at least an equivalent assurance of safety and effectiveness. *Select "N/A" if there is no applicable special controls document. Select "No" if the submission does not include a rationale for any omitted information or any alternative approach as outlined above. Note that the adequacy of how mitigation measures in a*	☐	☐	☐

Questions? Contact FDA/CDRH/OCE/DID at CDRH-FOISTATUS@fda.hhs.gov or call 301-796-8118.

Records processed under FOIA Request #2015-1305; Released by CDRH on 05-11-2016.

Contains Nonbinding Recommendations

Elements of a Complete Submission (RTA Items) **(21 CFR 807.87 unless otherwise indicated)** Submission should be designated RTA if not addressed					
Check "Yes" if item is present, "N/A" if it is not needed and "No" if it is not included but needed.					
	• Any "No" answer will result in a "Refuse to Accept" decision. • Each element on the checklist should be addressed within the submission. The submitter may provide a rationale for omission for any criteria that are deemed not applicable. If a rationale is provided, the criterion is considered present (Yes). An assessment of the rationale will be considered during the review of the submission.		**Yes**	**N/A**	**No**
		special controls document have been addressed should be assessed during the substantive review.			
		Comments:			

Decision: Accept ___ Refuse to Accept _X__

If Accept, notify applicant; if Refuse to Accept, notify applicant in writing and include a copy of this checklist.

Digital Signature Concurrence Table	
Reviewer Sign-Off	Amy K. Levelle -S 2013.01.24 17:40:43 -05'00'
Branch Chief Sign-Off (digital signature optional)*	Albert E. Moyal Albert E. Moyal 2013.01.25 11:32:07 -05'00' for LS
Division Sign-Off (digital signature optional)*	

*Branch and Division review of checklist and concurrence with decision required. Branch and Division digital signature optional.

Questions? Contact FDA/CDRH/OCE/DID at CDRH-FOISTATUS@fda.hhs.gov or call 301-796-8118.

Records processed under FOIA Request #2015-1305; Released by CDRH on 05-11-2016.

Form for Converting a Special 510(k) to a Traditional or Abbreviated 510(k)

Note: Please send this to 510k Staff electronically. You do not need anyone to sign this in person.

Date: 1/24/13

Reviewer: Amy LeVelle

510(k) Number: K130077

Device Name: Remstar SE

Reason for Conversion (select one):

☐ **Change in Indications for Use (please list old and new indications below)**

☒ **Change in Technology (select one):**

- ☒ **We have not seen this change before in this device type**
- ☐ **We have seen this change before in this device type, but we need to see the data (please provide a brief statement below regarding why summary data/risk analysis are insufficient)**

☐ **Other (e.g. submission included unsolicited data or sponsor is modifying a device that is not their own – please specify below)**

The submission includes a change to a material formulation which is not used in another legally marketed predicate device. Specifically, two new colorants have been added. As per guidance on our website, http://www.fda.gov/MedicalDevices/DeviceRegulationandGuidance/HowtoMarketYourDevice/PremarketSubmissions/PremarketNotification510k/ucm134573.htm, a change in material formulation is not appropriate for special 510(k) unless it has been used in other legally marketed devices under the same classification regulation and for the same intended use.

In addition to the above reason for conversion, the submission includes a non-traditional means of evaluating biocompatibility by relying on an extraction study in lieu of some of the biocompatibility tests. The DCAS is not appropriate for evaluation of a chemical extraction study because all chemical leachates must be evaluated with a toxicological risk analysis and there are no well-defined pass/fail criteria. A biocompatibility consult will need to be sent to an FDA toxicologist for evaluation of the results.

Digital Signature Concurrence Table	
Reviewer Sign-Off	Amy K. Levelle -S 2013.01.24 17:01:03 -05'00'
Branch Chief Sign-Off	Albert E. Moyal Albert E. Moyal 2013.01.24 17:10:07 -05'00' for LS
Division Sign-Off (**please obtain before calling or e-mailing POS**)	Kwame O. Ulmer 2013.01.25 13:55:12 -05'00'

Please include this form in the file

64

Questions? Contact FDA/CDRH/OCE/DID at CDRH-FOISTATUS@fda.hhs.gov or call 301-796-8118.

Records processed under FOIA Request #2015-1305; Released by CDRH on 05-11-2016.

Date of POS Concurrence: (Please document POS contact (email or memo)): 1/28/13 (email)

Date of Phone Conversation with Sponsor: 1/28/13 (RTA traditional checklist was sent after notifying sponsor of conversion)
(The reviewer or Branch Chief must contact the sponsor to notify them of the conversion. At this time the reviewer or Branch Chief may request additional information that was not submitted in the special.)

Please include this form in the file

Questions? Contact FDA/CDRH/OCE/DID at CDRH-FOISTATUS@fda.hhs.gov or call 301-796-8118.

Records processed under FOIA Request #2015-1305; Released by CDRH on 05-11-2016.

Levelle, Amy

From: McCabe-Janicki, Margaret
Sent: Monday, January 28, 2013 7:09 AM
To: Levelle, Amy; Shulman, Marjorie G.; Pamidimukkala, Geeta K
Cc: Moyal, Albert E.; Ulmer, Kwame
Subject: RE: Emailing: K130077- Form for Converting e-sig.pdf

Follow Up Flag: Follow up
Flag Status: Flagged

Good morning,

I concur with this conversion. I have converted K130077 from a Special to a Traditional 510(k).

The new (90th day) due date is April 14, 2013. Please remember to include the form in the file, and let the company know about this change.

Best,
Margaret

-----Original Message-----
From: Levelle, Amy
Sent: Friday, January 25, 2013 2:04 PM
To: Shulman, Marjorie G.; McCabe-Janicki, Margaret; Pamidimukkala, Geeta K
Cc: Moyal, Albert E.
Subject: FW: Emailing: K130077- Form for Converting e-sig.pdf

Hello,

510k staff concurrence is needed for this conversion of a special 510(k) to a traditional 510(k).

Thank you,

Amy LeVelle

-----Original Message-----
From: Ulmer, Kwame
Sent: Friday, January 25, 2013 1:56 PM
To: Moyal, Albert E.
Cc: Levelle, Amy
Subject: RE: Emailing: K130077- Form for Converting e-sig.pdf

Concur,
In terms of process, kindly get Division and POS concurrence prior to sending traditional RTA.

Thanks

66

Questions? Contact FDA/CDRH/OCE/DID at CDRH-FOISTATUS@fda.hhs.gov or call 301-796-8118.

Records processed under FOIA Request #2015-1305; Released by CDRH on 05-11-2016.

Kwame Ulmer || Deputy Director - Science and Policy || Division of Anesthesiology, General Hospital, Respiratory, Infection Control & Dental Devices || (v) 301.796.6471
www.fda.gov/deviceinnovationpathway

This communication is consistent with 21 CFR 10.85 (k) and constitutes an informal communication that represents my best judgment at this time but does not constitute an advisory opinion, does not necessarily represent the formal position of FDA, and does not bind or otherwise obligate or commit the agency to the views expressed.

-----Original Message-----
From: Moyal, Albert E.
Sent: Thursday, January 24, 2013 5:13 PM
To: Ulmer, Kwame
Cc: Levelle, Amy
Subject: Emailing: K130077- Form for Converting e-sig.pdf

Hi Kwame,

This Special 510(k), K130077, contains a material and colorant change that have not been seen before in predicate devices. Additionally, the sponsor did not provide the required testing for this type of change. Please let me know if you have any questions.

Thank you,
Albert

Your message is ready to be sent with the following file or link attachments:

K130077- Form for Converting e-sig.pdf

Note: To protect against computer viruses, e-mail programs may prevent sending or receiving certain types of file attachments. Check your e-mail security settings to determine how attachments are handled.

67

Questions? Contact FDA/CDRH/OCE/DID at CDRH-FOISTATUS@fda.hhs.gov or call 301-796-8118.

Records processed under FOIA Request #2015-1305; Released by CDRH on 05-11-2016.

Levelle, Amy

From: Levelle, Amy
Sent: Monday, January 28, 2013 3:28 PM
To: 'frank.kadi@philips.com'
Subject: Remstar SE (K130077)

Dear Mr. Kadi;

This email is to notify you that your 510(k) submission (K130077) for the Remstar SE has been converted from a special to a traditional 510(k) based upon a change in fundamental technology. The submission includes a change to a material formulation which is not used in another legally marketed predicate device. Specifically, two new colorants have been added. As per guidance on our website, http://www.fda.gov/MedicalDevices/DeviceRegulationandGuidance/HowtoMarketYourDevice/PremarketSubmissions/PremarketNotification510k/ucm134573.htm, a change in material formulation is not appropriate for special 510(k) unless it has been used in other legally marketed devices under the same classification regulation and for the same intended use. In addition to the above reason for conversion, the submission includes a non-traditional means of evaluating biocompatibility by relying on an extraction study in lieu of some of the biocompatibility tests. The DCAS is not appropriate for evaluation of a chemical extraction study because all chemical leachates must be evaluated with a toxicological risk analysis and there are no well-defined pass/fail criteria. Therefore, a special 510(k) is not appropriate for your device and your device will be evaluated under a traditional 510(k).

If you have any questions, please feel free to contact me.

Sincerely,

Amy LeVelle
Biomedical Engineer
FDA/CDRH/ODE/DAGRID/RPDB
10903 New Hampshire Avenue
Silver Spring, MD 20993
Phone: (301) 796-6963
E-Mail: Amy.LeVelle@fda.hhs.gov

THIS MESSAGE IS INTENDED ONLY FOR THE USE OF THE PARTY TO WHOM IT IS ADDRESSED AND MAY CONTAIN INFORMATION THAT IS PRIVILEGED, CONFIDENTIAL, AND PROTECTED FROM DISCLOSURE UNDER LAW. If you are not the addressee, or a person authorized to deliver the document to the addressee, you are hereby notified that any review, disclosure, dissemination, copying, or other action based on the content of this communication is not authorized. If you have received this document in error, please notify the sender immediately by e-mail or phone.

68

Questions? Contact FDA/CDRH/OCE/DID at CDRH-FOISTATUS@fda.hhs.gov or call 301-796-8118.

Records processed under FOIA Request #2015-1305; Released by CDRH on 05-11-2016.

COVER SHEET MEMORANDUM

Food and Drug Administration
Office of Device Evaluation &
Office of In Vitro Diagnostics and
Radiological Health

From: Reviewer Name Amy LeVelle

Subject: 510(k) Number K130077/S002

To: The Record

Please list CTS decision code: SE - Substantially Equivalent

☐ Refused to Accept (Note: this is considered the first review cycle. See screening checklist.)

☐ Hold (Additional Information or Telephone Hold)

☒ Final Decision (SE, SE with Limitations, NSE (select code below), Withdrawn, etc.)

Please complete the following for a final clearance decision (i.e, SE, SE with Limitations, etc.)	YES	NO
Indications for Use Page *(Attach IFU)*	X	
510(k) Summary or 510(k) Statement *(Attach Summary or Statement)*	X	
Truthful and Accurate Statement *(Must be present for a Final Decision)*	X	
Is the device Class III?		X
oes firm reference standards? (If yes, please attach Form 3654.)	X	
Is this a combination product?		X
Is this a reprocessed single use device? (See Guidance for Industry and FDA Staff - MDUFMA - Validation Data in 510(k)s for Reprocessed Single-Use Medical Devices.)		X
Is this device intended for pediatric use only?		X
Is this a prescription device? (If both prescription & OTC, check both boxes.)	X	
Is clinical data necessary to support the review of this 510(k)?		X
For United States based clinical studies only, did the application include a completed Form FDA 3674, Certification with Requirements of ClinicalTrials.gov Data Bank? (If study was conducted in the United States and Form FDA 3674 was not included or was incomplete, then applicant must be contacted to obtain completed form.)		X
Does this device include an Animal Tissue Source?		X
All Pediatric Patients age <= 21		X
Neonate/Newborn (Birth to 28 days)		X
Infant (29 days to < 2 years)		X
Child (2 years to <12 years)		X
Adolescent (12 years to <18 years)		X
Transitional Adolescent A (18 years to <21 years); Special considerations are being given to this group, different from dults age >= 21 (different device design or tesating, different protocol procedures, etc.)		X
Transitional Adolescent B (18 years to <21 years); No special considerations compared to adults >= 21 years)		X

Questions? Contact FDA/CDRH/OCE/DID at CDRH-FOISTATUS@fda.hhs.gov or call 301-796-8118.

Records processed under FOIA Request #2015-1305; Released by CDRH on 05-11-2016.

Nanotechnology		X
Is this device subject to the Tracking Regulation? (Medical Device Tracking Guidance)		X

Regulation Number:	868.5905
Class:	II
Product Code:	BZD
Additional Product Codes:	

Digital Signature Concurrence Table
(Not all signatures may be required)

Branch Chief Sign-Off	Paul H. Shin -S 2013.05.16 11:49:01 -04'00'
Division Sign-Off	Kwame O. Ulmer -S 2013.05.21 11:41:23 -04'00'

Questions? Contact FDA/CDRH/OCE/DID at CDRH-FOISTATUS@fda.hhs.gov or call 301-796-8118.

Records processed under FOIA Request #2015-1305; Released by CDRH on 05-11-2016.

K130077|S001

06 February 2013

Philips Respironics
1001 Murry Ridge Lane
Murrysville PA, 15668

U.S. Food and Drug Administration
Center for Devices and Radiological Health
Document Mail Center - WO66-G609
10903 New Hampshire Avenue
Silver Spring, MD 20993-0002

FDA CDRH DMC
FEB 11 2013
Received

Reference: K130077 REMstar SE – Refuse to Accept Notification Response

Dear Madam/Sir:

Respironics Inc. hereby submits the following additional information to address a deficiency identified within the Refuse to Accept Notification received for K130077 (REMstar SE). This information was requested by the assigned FDA reviewer Amy LeVelle (Phone: 301-796-6963; Email: Amy.LeVelle@fda.hhs.gov) in an email received on January 28, 2013.

We consider our intent to market this device as confidential commercial information and request that it be treated as such by the FDA. We have taken precautions to protect the confidentiality of the intent to market this device. We understand that the submission to the government of false information is prohibited by 18 U.S.C. 1001 and 21 U.S.C. 331(q).

An eCopy has been provided in addition to the paper version. The eCopy is an exact duplicate of the paper copy except that the eCopy does not include page numbers.

Thank you in advance for your consideration of our application and your acceptance of this additional information. If there are any questions, please fee to contact me at (724) 387-4134 or by email at Frank.Kadi@philips.com.

Sincerely,

Frank Kadi
Senior Regulatory Affairs Engineer

Questions? Contact FDA/CDRH/OCE/DID at CDRH-FOISTATUS@fda.hhs.gov or call 301-796-8118.

Records processed under FOIA Request #2015-1305; Released by CDRH on 05-11-2016.

06 February 2013

Philips Respironics
1001 Murry Ridge Lane
Murrysville, PA, 15668

U.S. Food and Drug Administration
Center for Devices and Radiological Health
Document Mail Center - WO66-G609
10903 New Hampshire Avenue
Silver Spring, MD 20993-0002

Reference: K130077 REMstar SE – Refuse to Accept Notification Response

Dear Madam/Sir:

Respironics Inc. hereby submits the following additional information to address a deficiency identified within the Refuse to Accept Notification received for K130077 (REMstar SE). This information was requested by the assigned FDA reviewer Amy LeVelle (Phone: 301-796-6963; Email: Amy.LeVelle@fda.hhs.gov) in an email received on January 28, 2013.

We consider our intent to market this device as confidential commercial information and request that it be treated as such by the FDA. We have taken precautions to protect the confidentiality of the intent to market this device. We understand that the submission to the government of false information is prohibited by 18 U.S.C. 1001 and 21 U.S.C. 331(q).

An eCopy has been provided in addition to the paper version. The eCopy is an exact duplicate of the paper copy except that the eCopy does not include page numbers.

Thank you in advance for your consideration of our application and your acceptance of this additional information. If there are any questions, please fee to contact me at (724) 387-4134 or by email at Frank.Kadi@philips.com.

Sincerely,

Frank Kadi
Senior Regulatory Affairs Engineer

Questions? Contact FDA/CDRH/OCE/DID at CDRH-FOISTATUS@fda.hhs.gov or call 301-796-8118.

Response to FDA Refuse to Accept Notification

REMstar SE (K130077)

Note(s):

- The element identified as a deficiency in the Acceptance Checklist for Traditional 510(k)s that was provided from the FDA reviewer is highlighted in blue with the associated response following immediately after.

© 2013 Koninklijke Philips Electronics N.V. All Rights Reserved

Questions? Contact FDA/CDRH/OCE/DID at CDRH-FOISTATUS@fda.hhs.gov or call 301-796-8118.

[Acceptance Checklist for Traditional 510(k)s - Item # 31]

Element Description:

Biocompatibility assessment of patient-contacting components

Submission includes:

Test protocol (including identification and description of test article), methods, pass/fail criteria, and results provided for each completed test, OR

a statement that biocompatibility testing is not needed with a rationale (e.g., materials and manufacturing/processing are identical to the predicate).

Result of Refuse to Accept Review: No. Information was not included but is needed.

Checklist Comments: Please provide complete test protocols for biocompatibility testing and extraction studies used to assess biocompatibility of your device.

Response:

The biocompatibility testing outlined below has been completed for the material modifications that are the subject of this premarket notification. The reports associated with these completed tests are presented in Tab 1 and Tab 2 of this response. Each report includes the test protocol (including identification and description of test article)/methods, pass/fail criteria and results for each completed test. Reports for Genotoxicity and Implantable testing are being presented for these materials as they reside within the airflow path of the REMstar SE post introduction of humidification.

Tab 1. Biocompatibility Reports for Bayer Bayblend M301FR with 704019 colorant

- Implantable: ISO Muscle Implantable Study in Rabbits – 4 Weeks
- Genotoxicity: Bacterial Reverse Mutation Study
- Genotoxicity: Mouse Lymphoma Assay
- Genotoxicity: Mouse Peripheral Blood Micronucleus Study
- Irritation: Intracutaneous Injection Test - ISO
- Cytotoxicity: L929 MTT Cytotoxicity Test (4 Concentrations) – ISO
- Sensitization: Kligman Maximization Test - ISO

Tab 2. Biocompatibility Reports for Sabic Lexan HPX4 with 7H8D456T colorant

- Implantable: ISO Muscle Implantable Study in Rabbits – 4 Weeks
- Genotoxicity: Bacterial Reverse Mutation Study
- Genotoxicity: Mouse Lymphoma Assay
- Genotoxicity: Mouse Peripheral Blood Micronucleus Study
- Irritation: Intracutaneous Injection Test - ISO
- Cytotoxicity: L929 MTT Cytotoxicity Test (4 Concentrations) – ISO
- Sensitization: Kligman Maximization Test - ISO

 © 2013 Koninklijke Philips Electronics N.V. All Rights Reserved

Questions? Contact FDA/CDRH/OCE/DID at CDRH-FOISTATUS@fda.hhs.gov or call 301-796-8118.

Records processed under FOIA Request #2015-1305; Released by CDRH on 05-11-2016.

Tab 1

Biocompatibility Reports for

(b)(4) [redacted]

The following tests are presented in this section:

Implantable:	ISO Muscle Implantable Study in Rabbits – 4 Weeks
Genotoxicity #1:	Bacterial Reverse Mutation Study
Genotoxicity #2:	Mouse Lymphoma Assay
Genotoxicity #3:	Mouse Peripheral Blood Micronucleus Study
Irritation:	Intracutaneous Injection Test - ISO
Cytotoxicity:	L929 MTT Cytotoxicity Test (4 Concentrations) – ISO
Sensitization:	Kligman Maximization Test - ISO

(Please turn the page)

 © 2013 Koninklijke Philips Electronics N.V. All Rights Reserved
Questions? Contact FDA/CDRH/OCE/DID at CDRH-FOISTATUS@fda.hhs.gov or call 301-796-8118.

Records processed under FOIA Request #2015-1305; Released by CDRH on 05-11-2016.

(b)(4)

[redacted]

Implantable Test

ISO Muscle Implantable Study in Rabbits – 4 Weeks

(Please turn the page)

© 2013 Koninklijke Philips Electronics N.V. All Rights Reserved
Questions? Contact FDA/CDRH/OCE/DID at CDRH-FOISTATUS@fda.hhs.gov or call 301-796-8118.

(b)(4) Testing

(b)(4) Testing

(b)(4) Testing

(b)(4) Testing

(b)(4) Testing

(b)(4) Testing

(b)(4) Testing

(b)(4) Testing

(b)(4) Testing

(b)(4) Testing

(b)(4) Testing

(b)(4) Testing

(b)(4) Testing

(b)(4) Testing

(b)(4) Testing

(b)(4) Testing

(b)(4) Testing

(b)(4) Testing

(b)(4) Testing

(b)(4) Testing

(b)(4) Testing

(b)(4) Testing

(b)(4) Testing

(b)(4) Testing

(b)(4) Testing

(b)(4) Testing

(b)(4) Testing

(b)(4) Testing

(b)(4) Testing

(b)(4) Testing

(b)(4) Testing

(b)(4) Testing

(b)(4) Testing

(b)(4) Testing

(b)(4) Testing

(b)(4) Testing

(b)(4) Testing

(b)(4) Testing

(b)(4) Testing

(b)(4) Testing

(b)(4) Testing

(b)(4) Testing

(b)(4) Testing

(b)(4) Testing

(b)(4) Testing

(b)(4) Testing

(b)(4) Testing

(b)(4) Testing

(b)(4) Testing

(b)(4) Testing

(b)(4) Testing

(b)(4) Testing

(b)(4) Testing

(b)(4) Testing

(b)(4) Testing

(b)(4) Testing

(b)(4) Testing

(b)(4) Testing

(b)(4) Testing

(b)(4) Testing

(b)(4) Testing

(b)(4) Testing

(b)(4) Testing

(b)(4) Testing

(b)(4) Testing

(b)(4) Testing

(b)(4) Testing

(b)(4) Testing

(b)(4) Testing

(b)(4) Testing

(b)(4) Testing

(b)(4) Testing

(b)(4) Testing

(b)(4) Testing

(b)(4) Testing

(b)(4) Testing

(b)(4) Testing

(b)(4) Testing

(b)(4) Testing

(b)(4) Testing

(b)(4) Testing

(b)(4) Testing

(b)(4) Testing

(b)(4) Testing

(b)(4) Testing

(b)(4) Testing

(b)(4) Testing

(b)(4) Testing

(b)(4) Testing

(b)(4) Testing

(b)(4) Testing

(b)(4) Testing

(b)(4) Testing

(b)(4) Testing

(b)(4) Testing

(b)(4) Testing

(b)(4) Testing

(b)(4) Testing

(b)(4) Testing

(b)(4) Testing

(b)(4) Testing

(b)(4) Testing

(b)(4) Testing

(b)(4) Testing

(b)(4) Testing

(b)(4) Testing

(b)(4) Testing

(b)(4) Testing

(b)(4) Testing

(b)(4) Testing

(b)(4) Testing

(b)(4) Testing

(b)(4) Testing

(b)(4) Testing

(b)(4) Testing

(b)(4) Testing

(b)(4) Testing

(b)(4) Testing

(b)(4) Testing

(b)(4) Testing

(b)(4) Testing

(b)(4) Testing

(b)(4) Testing

(b)(4) Testing

(b)(4) Testing

(b)(4) Testing

(b)(4) Testing

(b)(4) Testing

(b)(4) Testing

(b)(4) Testing

(b)(4) Testing

(b)(4) Testing

(b)(4) Testing

(b)(4) Testing

(b)(4) Testing

(b)(4) Testing

(b)(4) Testing

(b)(4) Testing

(b)(4) Testing

(b)(4) Testing

(b)(4) Testing

(b)(4) Testing

(b)(4) Testing

(b)(4) Testing

(b)(4) Testing

(b)(4) Testing

(b)(4) Testing

(b)(4) Testing

(b)(4) Testing

(b)(4) Testing

(b)(4) Testing

(b)(4) Testing

(b)(4) Testing

(b)(4) Testing

(b)(4) Testing

(b)(4) Testing

(b)(4) Testing

(b)(4) Testing

(b)(4) Testing

(b)(4) Testing

(b)(4) Testing

(b)(4) Testing

(b)(4) Testing

(b)(4) Testing

(b)(4) Testing

(b)(4) Testing

(b)(4) Testing

(b)(4) Testing

(b)(4) Testing

(b)(4) Testing

(b)(4) Testing

(b)(4) Testing

(b)(4) Testing

(b)(4) Testing

(b)(4) Testing

(b)(4) Testing

(b)(4) Testing

(b)(4) Testing

(b)(4) Testing

(b)(4) Testing

(b)(4) Testing

(b)(4) Testing

(b)(4) Testing

(b)(4) Testing

(b)(4) Testing

(b)(4) Testing

(b)(4) Testing

(b)(4) Testing

(b)(4) Testing

(b)(4) Testing

(b)(4) Testing

(b)(4) Testing

(b)(4) Testing

(b)(4) Testing

(b)(4) Testing

(b)(4) Testing

(b)(4) Testing

(b)(4) Testing

(b)(4) Testing

(b)(4) Testing

(b)(4) Testing

(b)(4) Testing

(b)(4) Testing

(b)(4) Testing

(b)(4) Testing

(b)(4) Testing

(b)(4) Testing

(b)(4) Testing

(b)(4) Testing

(b)(4) Testing

(b)(4) Testing

(b)(4) Testing

(b)(4) Testing

(b)(4) Testing

(b)(4) Testing

(b)(4) Testing

(b)(4) Testing

(b)(4) Testing

(b)(4) Testing

(b)(4) Testing

(b)(4) Testing

(b)(4) Testing

(b)(4) Testing

(b)(4) Testing

(b)(4) Testing

(b)(4) Testing

(b)(4) Testing

(b)(4) Testing

(b)(4) Testing

(b)(4) Testing

(b)(4) Testing

(b)(4) Testing

(b)(4) Testing

(b)(4) Testing

(b)(4) Testing

(b)(4) Testing

(b)(4) Testing

(b)(4) Testing

(b)(4) Testing

(b)(4) Testing

(b)(4) Testing

(b)(4) Testing

(b)(4) Testing

(b)(4) Testing

(b)(4) Testing

(b)(4) Testing

(b)(4) Testing

(b)(4) Testing

(b)(4) Testing

(b)(4) Testing

(b)(4) Testing

(b)(4) Testing

(b)(4) Testing

(b)(4) Testing

(b)(4) Testing

(b)(4) Testing

(b)(4) Testing

(b)(4) Testing

(b)(4) Testing

(b)(4) Testing

(b)(4) Testing

(b)(4) Testing

(b)(4) Testing

(b)(4) Testing

(b)(4) Testing

(b)(4) Testing

(b)(4) Testing

(b)(4) Testing

(b)(4) Testing

(b)(4) Testing

(b)(4) Testing

(b)(4) Testing

(b)(4) Testing

(b)(4) Testing

(b)(4) Testing

(b)(4) Testing

(b)(4) Testing

(b)(4) Testing

(b)(4) Testing

(b)(4) Testing

(b)(4) Testing

(b)(4) Testing

(b)(4) Testing

(b)(4) Testing

(b)(4) Testing

(b)(4) Testing

(b)(4) Testing

(b)(4) Testing

(b)(4) Testing

(b)(4) Testing

(b)(4) Testing

(b)(4) Testing

(b)(4) Testing

(b)(4) Testing

(b)(4) Testing

(b)(4) Testing

(b)(4) Testing

(b)(4) Testing

(b)(4) Testing

(b)(4) Testing

(b)(4) Testing

(b)(4) Testing

(b)(4) Testing

(b)(4) Testing

(b)(4) Testing

(b)(4) Testing

(b)(4) Testing

(b)(4) Testing

(b)(4) Testing

(b)(4) Testing

(b)(4) Testing

(b)(4) Testing

(b)(4) Testing

(b)(4) Testing

(b)(4) Testing

(b)(4) Testing

(b)(4) Testing

(b)(4) Testing

(b)(4) Testing

(b)(4) Testing

(b)(4) Testing

(b)(4) Testing

(b)(4) Testing

(b)(4) Testing

(b)(4) Testing

(b)(4) Testing

(b)(4) Testing

(b)(4) Testing

(b)(4) Testing

(b)(4) Testing

Records processed under FOIA Request #2015-1305; Released by CDRH on 05-11-2016.

K130077/S2

24 April 2013

FDA CDRH DMC
APR 25 2013
Received

Philips Respironics
1001 Murry Ridge Lane
Murrysville, PA, 15668

U.S. Food and Drug Administration
Center for Devices and Radiological Health
Document Mail Center - WO66-G609
10903 New Hampshire Avenue
Silver Spring, MD 20993-0002

Reference: K130077 REMstar SE – Supplemental Information #1

Dear Madam/Sir:

Respironics Inc. hereby submits the following supplemental information for the Traditional 510(k) currently being reviewed under K130077 (REMstar SE). This information is in response to the FDA Request for Additional Information from Amy LeVelle (Phone: 301-796-6963; Email: Amy.LeVelle@fda.hhs.gov) in an email received on April 12, 2013.

This response is provided in duplicate, with one paper copy and one electronic copy. The eCopy is an exact duplicate of the paper copy.

We consider our intent to market this device as confidential commercial information and request that it be treated as such by the FDA. We have taken precautions to protect the confidentiality of the intent to market this device. We understand that the submission to the government of false information is prohibited by 18 U.S.C. 1001 and 21 U.S.C. 331(q).

Thank you in advance for your consideration of our application and your acceptance of this additional information. If there are any questions, please feel free to contact me at (724) 387-4134 or by email at Frank.Kadi@philips.com.

Sincerely,

Frank Kadi
Senior Regulatory Affairs Engineer

Questions? Contact FDA/CDRH/OCE/DID at CDRH-FOISTATUS@fda.hhs.gov or call 301-796-8118.

9

Records processed under FOIA Request #2015-1305; Released by CDRH on 05-11-2016.

24 April 2013

Philips Respironics
1001 Murry Ridge Lane
Murrysville, PA, 15668

U.S. Food and Drug Administration
Center for Devices and Radiological Health
Document Mail Center - WO66-G609
10903 New Hampshire Avenue
Silver Spring, MD 20993-0002

Reference: K130077 REMstar SE – Supplemental Information #1

Dear Madam/Sir:

Respironics Inc. hereby submits the following supplemental information for the Traditional 510(k) currently being reviewed under K130077 (REMstar SE). This information is in response to the FDA Request for Additional Information from Amy LeVelle (Phone: 301-796-6963; Email: Amy.LeVelle@fda.hhs.gov) in an email received on April 12, 2013.

This response is provided in duplicate, with one paper copy and one electronic copy. The eCopy is an exact duplicate of the paper copy.

We consider our intent to market this device as confidential commercial information and request that it be treated as such by the FDA. We have taken precautions to protect the confidentiality of the intent to market this device. We understand that the submission to the government of false information is prohibited by 18 U.S.C. 1001 and 21 U.S.C. 331(q).

Thank you in advance for your consideration of our application and your acceptance of this additional information. If there are any questions, please feel free to contact me at (724) 387-4134 or by email at Frank.Kadi@philips.com.

Sincerely,

Frank Kadi
Senior Regulatory Affairs Engineer

Questions? Contact FDA/CDRH/OCE/DID at CDRH-FOISTATUS@fda.hhs.gov or call 301-796-8118.

Records processed under FOIA Request #2015-1305; Released by CDRH on 05-11-2016.

Response to Additional Information Request Dated 04-12-2013

REMstar SE (K130077)

Note(s):

- Each FDA Request for Additional Information is highlighted in blue with the associated response following immediately after.

Questions? Contact FDA/CDRH/OCE/DID at CDRH-FOISTATUS@fda.hhs.gov or call 301-796-8118.

(b)(4) Responses to FDA Additional Information

(b)(4) Responses to FDA Additional Information

(b)(4) Responses to FDA Additional Information

(b)(4) Responses to FDA Additional Information

(b)(4) Responses to FDA Additional Information

(b)(4) Responses to FDA Additional Information

(b)(4) Responses to FDA Additional Information

(b)(4) Responses to FDA Additional Information

(b)(4) Responses to FDA Additional Information

(b)(4) Responses to FDA Additional Information

(b)(4) Responses to FDA Additional Information

(b)(4) Responses to FDA Additional Information

(b)(4) Responses to FDA Additional Information

(b)(4) Responses to FDA Additional Information

(b)(4) Responses to FDA Additional Information

(b)(4) Responses to FDA Additional Information

(b)(4) Responses to FDA Additional Information

(b)(4) Responses to FDA Additional Information

(b)(4) Responses to FDA Additional Information

(b)(4) Responses to FDA Additional Information

(b)(4) Responses to FDA Additional Information

(b)(4) Responses to FDA Additional Information

(b)(4) Responses to FDA Additional Information

(b)(4) Responses to FDA Additional Information

(b)(4) Responses to FDA Additional Information

(b)(4) Responses to FDA Additional Information

(b)(4) Responses to FDA Additional Information

(b)(4) Responses to FDA Additional Information

(b)(4) Responses to FDA Additional Information

(b)(4) Responses to FDA Additional Information

(b)(4) Responses to FDA Additional Information

(b)(4) Responses to FDA Additional Information

(b)(4) Responses to FDA Additional Information

(b)(4) Responses to FDA Additional Information

(b)(4) Responses to FDA Additional Information

(b)(4) Responses to FDA Additional Information

Attachment 2

Literature References

The following literature references are presented in this section:

1. Amacher, D.E., Paillet, S., Turner, G.N., Ray, V.A. and Salsburg, D.S., "Point Mutations at the Thymidine Kinase Locus in L5178Y Mouse Lymphoma cells. II. Test Validation and Interpretation," Mutation Research, Vol 72, 1980, pp. 447-474.
2. Clements, J., "The Mouse Lymphoma Assay," Mutation Research, 455 (2000) 97-110.

(Please turn the page)

 © 2013 Koninklijke Philips Electronics N.V. All Rights Reserved
Questions? Contact FDA/CDRH/OCE/DID at CDRH-FOISTATUS@fda.hhs.gov or call 301-796-8118.

Records processed under FOIA Request #2015-1305; Released by CDRH on 05-11-2016.

Mutation Research, 72 (1980) 447—474
© Elsevier/North-Holland Biomedical Press

POINT MUTATIONS AT THE THYMIDINE KINASE LOCUS IN L5178Y MOUSE LYMPHOMA CELLS

II. TEST VALIDATION AND INTERPRETATION

DAVID E. AMACHER *, SIMONE C. PAILLET, GAIL N. TURNER, VERNE A. RAY and DAVID S. SALSBURG

Drug Safety Evaluation and Clinical Research Departments, Pfizer Central Research, Groton, CN 06340 (U.S.A.)

(Received 8 May 1979)
(Revision received 18 March 1980)
(Accepted 12 May 1980)

Summary

The L5178Y Mouse Lymphoma TK assay was studied extensively to determine if this mammalian cell assay for gene mutations at the thymidine kinase (TK) locus could provide valid, interpretable determinations of mutagenic potential, and whether this information is of value in the safety evaluation of chemicals. We first determined that test-derived TFT^R mutants were phenotypically stable, possessing little or no thymidine kinase activity as measured by labeled thymidine uptake, but demonstrating 100% cross resistance to bromodeoxyuridine. Common solvent vehicles such as acetone, dimethylsulfoxide and ethanol were shown to produce little cytotoxicity and no mutagenic activity when present at 1% levels. Out of a total of 10 noncarcinogens tested, all were negative when results were analyzed by a 2-sample $\log_e t$ test on control and treated mutant count means. Of the 13 putative animal carcinogens tested, 10 were positive, 2 were negative (auramine O and sodium phenobarbital), and 1 showed sporadic activity (hydrazine sulfate) in the TK assay on the basis of test-derived t statistics. 2 compounds, 1,2-epoxybutane and ICR 191, which have been described as Ames positive non-carcinogens, were also positive in the TK assay. Although this sampling of a total of 29 compounds is insufficient for precise estimations of expected false-positive or false-negative frequencies, these data indicate the TK assay can be expected to detect a majority of carcinogens as mutagens including some missed by more established point-mutation assays.

* To whom reprint requests should be sent and all correspondence addressed.

Questions? Contact FDA/CDRH/OCE/DID at CDRH-FOISTATUS@fda.hhs.gov or call 301-796-8118.

Records processed under FOIA Request #2015-1305; Released by CDRH on 05-11-2016.

The in vitro $TK^{+/-} \rightarrow TK^{-/-}$ mutation assay using L5178Y mouse-lymphoma cells has been developed by Clive and coworkers [7—14] for the detection of forward gene (point) mutations by chemical or physical agents in a cultured mammalian cell system. In this assay, the induced, heritable loss of thymidine kinase (TK) activity, presumably a result of permanent DNA damage by the experimental agent at a specific gene locus, can be detected by: (1) briefly exposing heterozygous $TK^{+/-}$ cell stock to predetermined dose levels of a test substance, either in the presence or absence of metabolic activation provided by liver S9, (2) maintaining treated cells for 48 h to allow the recovery and phenotypic expression of induced $TK^{-/-}$ mutants, and, (3) cloning treated cells in soft-agar medium containing a $TK^{-/-}$ selective agent. Mutagen-induced or spontaneously arising mutants are easily detected by their inherent resistance to either of 2 commonly used pyrimidine analogs, trifluorothymidine (TFT) [6] or bromodeoxyuridine (BUdR) [10]. Both selective agents are presumably incorporated into the DNA of TK-competent ($TK^{+/-}$) cells. But TK-deficient ($TK^{-/-}$) cells which lack the appropriate enzyme (thymidine kinase) essential for the initial phosphorylation of thymidine or thymidine analogs prior to incorporation into cellular DNA are capable of growing in the presence of the 2 antimetabolites.

Our rationale for investigating the mouse-lymphoma TK assay in depth was to determine if this mammalian cell mutation assay could be used to extend the detection capabilities of a battery of genetic toxicology tests for the screening of proprietary drugs and chemicals for mutagenic activity. At present, the Ames test [3—4] for gene mutations is unquestionably attractive for large-scale, rapid screening purposes because of its simplicity, sensitivity and capacity. It also may have special analytical application in the detection of trace mutagenic impurities in the production of chemicals [16]. But its potential for predicting carcinogenicity may have certain limitations [5]. For example, 17% of the noncarcinogens tested in one extensive study produced positive Ames mutagenicity while 28% of the carcinogens tested apparently were not detected as positive mutagens [25]. Since the most commonly used Ames tester strains represent highly modified varieties of the prokaryote *S. typhimurium*, mutagenicity data derived from this test should not be used exclusively as the basis for determining human carcinogenic potential. Most drugs, food additives and agricultural chemicals in development today are intended for the benefit of or therapeutic use in humans or livestock. Chemicals or their metabolites which produce histidine revertants in *S. typhimurium* may or may not produce chromosomal aberrations, forward gene mutations, or neoplastic changes in mammalian cells and vice-versa. For these reasons, complementary testing in a mammalian cell mutation assay in addition to microbial testing seems essential when screening chemicals for mutagenic activity.

After resolving some initial procedural problems with the TK assay [1], we proceeded to determine the general validity of the test, i.e., the potential to correctly identify true mutagens from non-mutagens, by testing a variety of agents including known mutagens as well as established non-mutagens such as commonly used solvent vehicles. Where appropriate, compounds were tested in the presence of an S9 microsomal enzyme fraction obtained from Aroclor-induced rat liver or in some cases, from non-induced rat liver. The decision to

Questions? Contact FDA/CDRH/OCE/DID at CDRH-FOISTATUS@fda.hhs.gov or call 301-796-8118.

Records processed under FOIA Request #2015-1305; Released by CDRH on 05-11-2016.

include S9 was, in each case, based either on the known metabolism of the compound or the experimental conditions previously used by others (for a review of carcinogen metabolism, see ref. 27). Mutagenesis data generated from the testing of these compounds were then subjected to statistical analysis by a novel application of conventional procedures and criteria for the interpretation of test results established on the basis of probability levels and average increases in absolute mutant numbers in treated versus control cell populations.

We also rigorously tested typical trifluorothymidine-resistant (TFT^R), $TK^{-/-}$ mutant cell clones to confirm that they remained TFT^R, were cross-resistant to BUdR, and demonstrated little or no uptake and phosphorylation of [^{14}C]-thymidine. We report here the results of these studies along with recommendations for test interpretation based on our experience with the assay.

Materials and methods

Chemicals and abbreviations

Test compounds and other chemicals were obtained from the following sources: acetone: Ashland Chemical; *N*-acetoxy-2-acetylaminofluorene (N-AcO-AAF): NCI Chemical Carcinogen Repository; *N*-acetyl-2-aminofluorene (AAF): Pfaltz and Bauer; acridine orange: Aldrich; 9-aminoacridine: Aldrich; aniline: Mallinckrodt or Fisher; anthracene: Aldrich gold-label; Auramine O: Aldrich; 1,2-benzanthracene: Sigma; benzo[*a*]pyrene: Aldrich gold-label; caffeine: Pfizer; 5-bromo-2′-deoxyuridine (BUdR): Sigma; dimethylsulfoxide (DMSO): Pierce Chemical, silylation grade; diphenylamine: MCB; 1,2-epoxybutane: Matheson; ethanol: IMC Chemical Group; ethyl methanesulfonate (EMS): Sigma: F-68 pluronic: BASF Wyandotte; hydrazine sulfate: Sigma; 1CR 17OH [2-methoxy-6-chloro-9-(3-(ethyl-2-chloroethyl)aminopropylamino)-acridine · 2HCl] and 1CR 19OG [2-methoxy-6-chloro-9-(3-(2-chloroethyl)aminopropylamino)acridine · 2HCl]: Dr. R. Peck; Institute for Cancer Research; 6-mercaptopurine (6MP): Aldrich; methanol: Mallinkrodt; 3-methylcholanthrene (MCA): Sigma; *N*-nitroso-*N*-methylurea (NMU): K and K; 4-nitroquinoline-1-oxide (4NQO): K and K; pyrene: Dr. J. Wolff, Pfizer; quercetin: Sigma; RPMI-1640 medium: Microbiological Associates; sodium phenobarbital: Merck, sucrose: Fisher; tetracene: Aldrich; [^{14}C]thymidine: New England Nuclear; thymidine and trifluorothymidine (TFT): Sigma.

R_{3p}, R_{5p}, and R_{10p} refer to test or growth media containing RPMI-1640, antibiotics in some cases, pluronic F-68, sodium pyruvate, and 3, 5 or 10% horse serum, resp. In later experiments, the pyruvate was omitted from all test and growth media with no observable untoward effects on cell viability or doubling time.

Cells

$TK^{+/-}$ 3.7.2C. cells determined free of mycoplasma by electron microscopy, originally were obtained from Dr. D. Clive, Burroughs Wellcome Co., and were used throughout these experiments wherever stock $TK^{+/-}$ cells are indicated. We periodically tested these cells for mycoplasma contamination and they were always negative. Initially, all cells were grown in RPMI-1640 media supplemented with 10% horse serum, 1 mM sodium pyruvate, 0.1% F-68 pluronic,

Questions? Contact FDA/CDRH/OCE/DID at CDRH-FOISTATUS@fda.hhs.gov or call 301-796-8118.

Records processed under FOIA Request #2015-1305; Released by CDRH on 05-11-2016.

and 50 units/ml penicillin—50 μg/ml streptomycin (R_{10p}) in shaking cultures. In later experiments, cells were grown exclusively in similar media containing only 5% serum and no pyruvate (R_5). Stock cells were treated weekly with a thymidine, hypoxanthine, methotrexate, glycine (THMG) mixture to reduce spontaneous $TK^{-/-}$ mutant levels (see ref. 1 for optimal conditions). Neither serum nor media were heat-inactivated.

In order to determine the authenticity and phenotypic stability of experimentally derived $TK^{-/-}$ mutants, 11 presumed TFT^R cell clones were obtained as follows: 3.7.2C. $110^{-/-}$ cells were obtained from Dr. Bryan Myhr, Litton Bionetics, and reportedly have extremely low levels of TK activity in cell lysates (personal communication, Dr. D. Clive). $TK^{-/-}$ cell lines GT1—GT5 were obtained by us as TFT^R clones following treatment of $TK^{+/-}$ cells with 2.5×10^{-3} M EMS; GT6 cells were TFT^R clones induced by 2×10^{-5} M 3MCA; GT7—GT9 were TFT^R clones obtained following treatment of $TK^{+/-}$ cells with 8.9×10^{-4} M AAF; and GT10 was a TFT^R spontaneous (untreated) mutant clone. All TFT^R, $TK^{-/-}$ cell lines were grown in non-selective medium without antibiotics for either 33 cell doublings (GT4, GT5, GT7, GT8, GT9) or 50 cell doublings (GT1, GT2, GT3, GT6, GT10) prior to recloning in either 4 μg/ml TFT or 100 μg/ml BUdR to determine if TFT resistance was still being expressed and if cross-resistance to BUdR existed.

[^{14}C]Thymidine uptake

If TFT-resistance represents a true genetic alteration affecting the TK locus, these $TK^{-/-}$ cells should continue to show no appreciable TK enzyme activity even after many generations under non-selective conditions. To assess this, the modified procedures of B. Myhr (personal communication) were followed with these same 11 TFT^R cell lines to estimate total TK activity indirectly as the amount of intracellular phosphorylated thymidine derivatives formed during 1-h incubation in labeled thymidine. [2-^{14}C]Thymidine was diluted with cold thymidine to yield 100× stock with a final molarity of 5.0×10^{-5} M and a specific activity of 5.45 μCi/μmole when added to cells suspended in R_{10p}. An initial uptake study by $TK^{+/-}$ cells at 0, 0.5, 1, and 2 h time intervals in 5.0×10^{-5} M labeled thymidine and 2 h in 10.0×10^{-5} M labeled-thymidine was used to determine if 5.0×10^{-5} M was saturating. All 11 TFT^R cell lines plus 3 control $TK^{+/-}$ cell cultures were then incubated at cell densities of 4×10^5 cells/ml in R_{10p} with 5.0×10^{-5} M labeled thymidine for 1 h. One $TK^{+/-}$ cell suspension was labeled for a total of 1 min and served as a zero control. Radioactive media was removed by centrifuging, cells suspended in Tris/EDTA buffer (pH 7.4, 1 mM EDTA) and membranes ruptured by freeze-thawing 3 times in acetone—dry ice followed by warm water. Microscopic examination verified complete cell lysis. Cell lysates were then filtered through prewetted DE81 ion-exchange filters, rinsed repeatedly with 4 mM NH_4HCO_3 followed by distilled water. After air-drying overnight, the filter discs were assayed by scintillation counting in 10 ml Aquasol for phosphorylated [^{14}C]thymidine which remains bound to the DEAE filter discs.

Liver S9 metabolic activation

Both Aroclor 1254-induced and non-induced S9 fraction (9000 × *g* super-

Questions? Contact FDA/CDRH/OCE/DID at CDRH-FOISTATUS@fda.hhs.gov or call 301-796-8118.

Records processed under FOIA Request #2015-1305; Released by CDRH on 05-11-2016.

natant) were prepared from male Sprague Dawley rat liver by an established procedure [4]. The final homogenate was centrifuged once at 9000 × *g* for 10 min at 0°, quick frozen in acetone—dry ice and stored at −20°. This preparation often required recentrifugation upon thawing to remove particulate matter which would otherwise interfere with cell counts. A more acceptable alternative was to centrifuge the S9 twice during initial preparation. Typical S9 preparations showed stable activity for up to 10 weeks under these storage conditions. S9, media, enzyme cofactors, and cells were combined as described by Clive [12]. A typical experiment using 10 treatment groups of one or more tubes each, proceeded as follows: 320 mg NADP and 600 mg isocitric acid were dissolved in 40 ml of RPMI-1640 containing 1 mM sodium pyruvate. This was neutralized with NaOH, filter sterilized, then 36 ml was combined with 12 ml S9 and kept on ice. A cell suspension of $TK^{+/-}$ cells was prepared at the last moment by pelleting 66×10^6 cells by centrifugation, then these cells were resuspended in 33 ml supernatant plus 33 ml R_{5p}. The complete reaction mixture consisted of 6 ml cell suspension plus 4 ml of the complete activation mix (S9 + NADP + isocitrate) with a final serum concentration of approx. 3%. When compounds were tested in the presence of S9 activation, treatment times were always 3 h and 2×10^{-5} M 3MCA served as a positive control (see ref. 1). Under these conditions, toxicity due to the S9 itself was insignificant and did not alter cloning efficiencies or background-mutation frequencies.

Mutagenesis assay

EMS, ICR 17OH, ICR 191G, 1,2-epoxybutane and hydrazine sulfate (0.37—2.76×10^{-3} M dose range) were dissolved in normal saline and filter-sterilized before use. Caffeine, 6MP, sodium phenobarbital and sucrose were dissolved directly in media and filter-sterilized (6MP required the addition of NaOH to aid solvation). Aniline, 9-aminoacridine, quercetin and diphenylamine were dissolved in ethanol; all other test compounds were dissolved in DMSO. When tested as pure compounds, acetone, ethanol, methanol and DMSO were added directly to media which was then cooled when necessary before cells were added. All solutions of test compounds were prepared immediately before use and protected from direct light. The treatment of cells with test compounds, selection of media, daily cell-counting techniques and expression period, and cloning in soft agar were as described previously [1]. Final concentrations of DMSO or ethanol vehicle were always 1% and these were removed along with the test compound after a total of 1—4 h mutagen exposure. Immediate toxicities (first 48 h) for DMSO, ethanol and other solvents were established to avoid excessive vehicle toxicity in subsequent studies with test compounds.

As shown in Fig. 1, all experiments were conducted in 2 steps. In a typical experiment, preliminary toxicity data was first obtained by treating 6×10^5 cells/ml suspension in R_{3p} with a 5-log range of test compound concentrations in half-log steps for 3 h (1, 2 or 4 h in a few cases, see Results) with or without Aroclor-stimulated rat-liver S9 as appropriate. Cytotoxicity for an individual compound was often quite different depending upon whether or not S9 was present. Washed cells were then counted and diluted to maintain log phase growth for 48 h. Approx. ID_{50} values were calculated as previously described [13]. For the actual mutagenesis assay, additional stock cells were then treated

Questions? Contact FDA/CDRH/OCE/DID at CDRH-FOISTATUS@fda.hhs.gov or call 301-796-8118.

Records processed under FOIA Request #2015-1305; Released by CDRH on 05-11-2016.

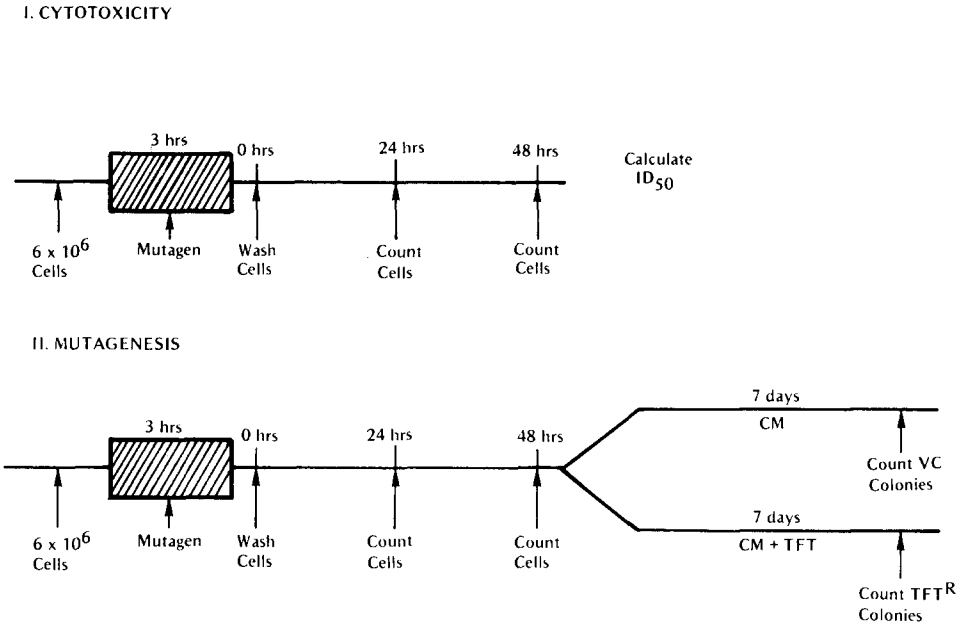

Fig. 1. Typical experimental protocol for mutagenesis testing at the TK locus is L5178Y cells.

with a series of compound concentrations using the estimated ID_{50} as the median dose and the same procedure repeated except cells were resuspended in soft-agar cloning medium (CM) after 48 h expression either with or without 4 μg/ml TFT. Those colonies growing in the absence of TFT (viable count or VC) were used in the cell-survival estimation and those growing in the TFT-treated plates were counted as mutant (TFT^R) colonies.

In these experiments, only those TFT^R colonies which could be detected by an Artek model 870 bacterial colony counter on day 7 or early day 8 (i.e. ⩾0.3 mm depending upon sensitivity setting) were tallied and used in subsequent mutant-frequency calculations. As a rule, all plates in an experiment were considered ready to count when both machine and manual counts for control viable count plates were in agreement. The same sensitivity setting was then used for all plates in that experiment. TFT^R colonies from solvent controls ($TK^{+/-}$ cell stock) actually form bimodal populations consisting of some colonies barely visible and a more obvious group which is clearly visible and uniform. Typical size distributions for these 2 groups on day 7 are: 0.27 ± 0.08 mm (small) and 0.68 ± 0.09 mm (large), although exact size depends upon elapsed time, serum concentration, and media quality. On this basis, all experimental data reported in this study were based predominantly on the frequencies of these large TFT^R colonies.

Statistical methods

The derived data displayed in Table 3 (see Results) deals with the average number of mutants per 10^4 survivors (i.e., corrected for cell viability) at a given concentration of test compound and is similar in format to displays found elsewhere [7]. However, the condensed raw data we present in Table 4 consists of

Questions? Contact FDA/CDRH/OCE/DID at CDRH-FOISTATUS@fda.hhs.gov or call 301-796-8118.

Records processed under FOIA Request #2015-1305; Released by CDRH on 05-11-2016.

the geometric means of the numbers of mutants on treated or control plates, where each plate count represents the number of mutants per 10^6 cells plated regardless of plating efficiency. The method of statistical analysis used here starts with those plate-specific counts. For most experimental runs, 3—6 plates were controls and 3 plates were used at each concentration of test compound. This gave 3—6 replications for the controls and $3X$ replications of the treatment, where X is the number of titrations used.

Initial attempts to regress the number of mutants per plate (adjusted) against concentration indicated that most of the compounds examined had no significant correlation between the 2 measures as long as the survival rate exceeded 20%. For survival rates below 20%, the "best fitting" regression relationship between number of mutants per plate and concentration varied considerably among the treatments. In many cases, the absolute number of mutants first increased with increasing mutagen dose then finally decreased, indicating that at some point lethal damage became predominant over lesser DNA damage resulting in mutagenic lesions. This inflection point usually occurred at mutagen doses producing $\geqslant$20% survival.

We then used a 2-sample t test on the natural logarithms of the raw counts to compare the mean number of mutants per plate for the controls to the mean number of mutants per plate for the $3Y$ treated plates, where Y is the number of concentrations with better than 20% survival.

Scheffe [26] has shown that the validity of a 2-sample t-statistic as a test of mean difference is not affected by lack of normality in the underlying distribution, but for comparisons with unequal counts (as in this case) a lack of homogeneity of variance can have a serious effect.

Since the hypothesis of no mean difference between treatment and controls is the one under which the conditions must hold, we examined the relationship between control and treated sample variances for 9 experiments involving the non-mutagens, DMSO (2 Expts.), caffeine, methanol, tetracene, diphenylamine, sucrose, ethanol and pyrene. None of the resulting F Statistics were significant ($p > 0.05$). In addition, their scatter was well within what might be expected from 9 such statistics. 1 fell between the 10th and 20th percentiles, 1 between the 25th and 50th percentiles, 4 between the 50th and 75th percentiles, 2 between the 75th and 90th percentiles, and 1 between the 90th and 95th percentiles. However, for true mutagens, the increase in mutant frequencies at high concentrations does increase the variance. To adjust for this, we ran t-tests on log-transformed data (see ref. 19) with the harmonic mean of $3X$ and $3Y$ for degrees of freedom. Individual viable and TFT^R mutant counts from all solvent control plates were used to generate a Monte Carlo comparison of 2 statistical methods consisting of 1000 replications each. 9 "doses" of 1, 2, 3, 4 ..., 9 units, 3 plates each and 2 controls (0 units), 3 plates each were simulated by computer where the number of viable cells per plate = $480 - B(\text{dose}) + U(\text{dose}) + V(\text{dose})$ and the number of mutant cells per plate = $80 + D(\text{dose}) + S(\text{dose}) + T(\text{replicate})$. Constants B and D represent the linear effect on the number of viable or variant cells, resp., which was a direct result of a hypothetical dose. Random variables, U, V, S and T were sampled from normal distributions with means and variance as follows: $U = N(0, 121.18)$, $V = N(0, 32.08)$, $S = N(0, 15.48)$, and $T = N(0, 7.93)$. The decision criterion of 2 times

Questions? Contact FDA/CDRH/OCE/DID at CDRH-FOISTATUS@fda.hhs.gov or call 301-796-8118.

Records processed under FOIA Request #2015-1305; Released by CDRH on 05-11-2016.

the control mutation frequency ($2 \times f_k$) was taken from a paper by Clive et al. [12].

Results

Solvent toxicity

The 48-h toxicity (growth inhibition) curves for DMSO, methanol, ethanol, and acetone are presented in Fig. 2. These data suggest that all 4 solvents can cause a slight, temporary lag in cell growth when present at concentrations up to 2%. At levels between 3 and 11%, depending upon the specific solvent, more significant cellular damage occurs including cell lysis which can be confirmed by microscopic examination of treated cells. A comparison of negative control cell cultures exposed for 3 h to either 1% ethanol, 1% DMSO, 1% saline, or untreated media from a large number of experiments over a period of 2 years has indicated that the use of 1% ethanol or DMSO under these conditions does not appreciably alter cloning efficiency or background-mutation frequencies (data not shown) compared to saline or untreated controls.

Stability and authenticity of TFT resistance

The cellular uptake of ^{14}C-labeled 5×10^{-5} M thymidine (spec. act. 5.45 mCi/mmole) in growth media by $TK^{+/-}$ stock cells was nearly linear for incubation periods up to 2 h (Fig. 3). It was evident that this concentration of thy-

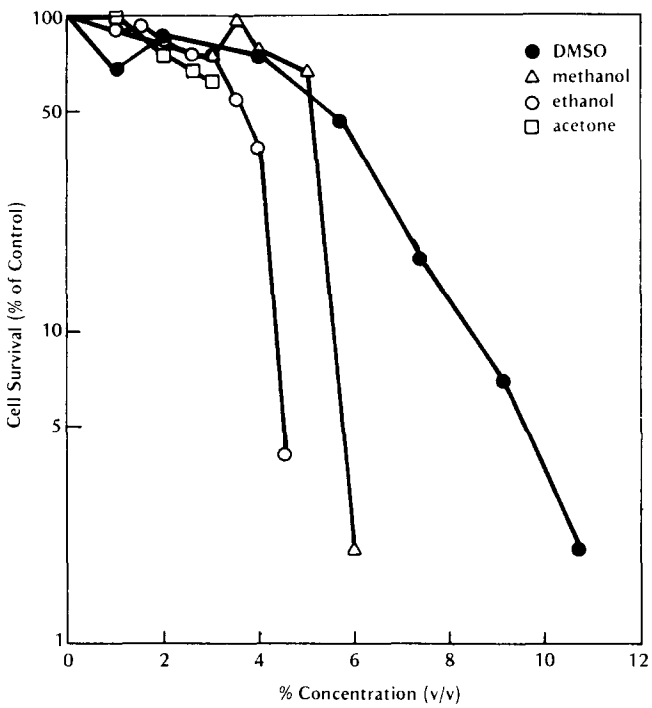

Fig. 2. Recovery of $TK^{+/-}$ cells treated for 3 h with 1 of 4 organic solvents. Cell survival is expressed as total growth (increase in cell numbers) of treated versus untreated control cells, 48 h after treatment.

Questions? Contact FDA/CDRH/OCE/DID at CDRH-FOISTATUS@fda.hhs.gov or call 301-796-8118.

Records processed under FOIA Request #2015-1305; Released by CDRH on 05-11-2016.

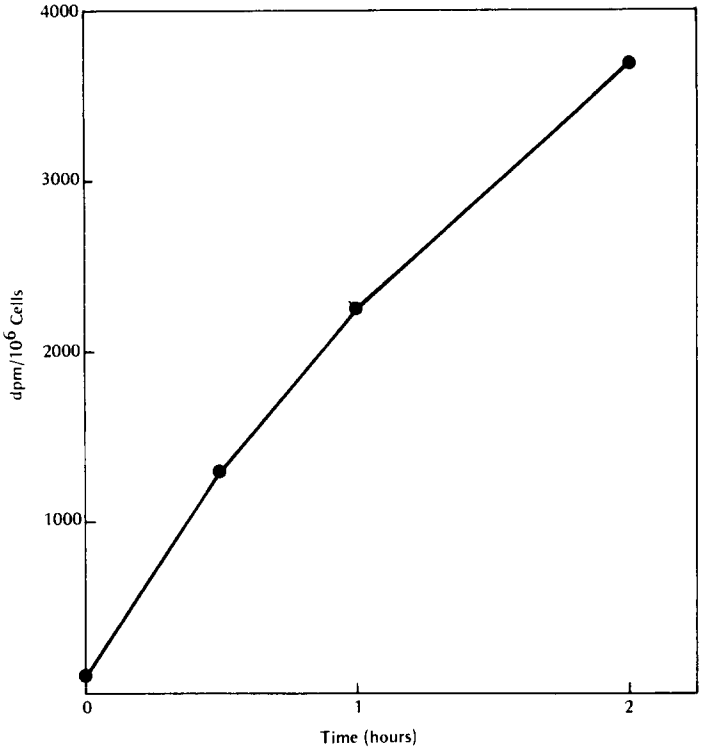

Fig. 3. Uptake of 5×10^{-5} M [^{14}C]thymidine by TK-competent ($TK^{+/-}$) cells as a function of time. Each point represents the average of 2 separate analyses on the same treatment sample.

midine was saturating was saturating since similar incubation of $TK^{+/-}$ cells for 2 h with 10×10^{-5} M thymidine resulted in no significant increase in thymidine uptake by these cells (3699 dpm/10^6 cells versus 3714 dpm/10^6 cells).

When a series of 11 different TFT^R clonal lines (GT1—GT10 and $TK^{-/-}$ 3.7.2C.110) and 3 normal $TK^{+/-}$ stock cultures were incubated in growth media containing 5×10^{-5} M radiolabeled thymidine for 1 h, no appreciable cellular uptake by these TFT^R cell lines above the zero control ($TK^{+/-}$ cells incubated for 1 min, then harvested and assayed) was observed (Table I). These results clearly demonstrate that all 11 presumed $TK^{-/-}$ cell lines originally isolated as TFT^R colonies, possessed little or no capacity to assimilate and phosphorylate exogenous thymidine under conditions which permit an appreciable accumulation of phosphorylated thymidine derivatives in normal $TK^{+/-}$ cells. At the same time, all 11 TFT^R clonal cell lines were again plated in soft-agar medium containing either 4 μg/ml TFT, 100 μg/ml BUdR or neither. The latter served as a viability determination. The absolute cloning efficiencies (% recovery of plated single cells as visible colonies) of the TFT^R lines varied widely and ranged from 28—104% (Table 2). When the recovery of newly formed TFT^R cell colonies was adjusted for cell viability, from 96 to 117% of the surviving cells were still resistant to 4 μg/ml TFT and 89—106% of these surviving cells were also cross-resistant to 100 μg/ml BUdR. For comparison, the normal

Questions? Contact FDA/CDRH/OCE/DID at CDRH-FOISTATUS@fda.hhs.gov or call 301-796-8118.

Records processed under FOIA Request #2015-1305; Released by CDRH on 05-11-2016.

TABLE 1

TOTAL THYMIDINE KINASE ACTIVITY AS DETERMINED BY THYMIDINE UPTAKE BY CELLS DURING 1-h INCUBATION IN 5×10^{-5} M THYMIDINE CONTAINING [^{14}C]THYMIDINE

Cell source	dpm per 5×10^5 cells	dpm per cell/h	Adjusted dpm/cell/h (minus zero control)
1. GT1	70	1.40×10^{-4}	0
2. GT2	93	1.87×10^{-4}	0.27×10^{-4}
3. GT3	50	1.00×10^{-4}	0
4. GT4	56	1.13×10^{-4}	0
5. GT5	68	1.37×10^{-4}	0
6. GT6	45	0.90×10^{-4}	0
7. GT7	75	1.50×10^{-4}	0
8. GT8	57	1.16×10^{-4}	0
9. GT9	47	0.96×10^{-4}	0
10. GT10	60	1.20×10^{-4}	0
11. TK$^-$/$^-$ 3.7.2C.110	88	1.76×10^{-4}	0.16×10^{-4}
12. Control $^{+/-}$	1407	28.00×10^{-4}	26.40×10^{-4}
13. Control $^{+/-}$	1344	26.90×10^{-4}	25.30×10^{-4}
14. Control $^{+/-}$	1399	28.00×10^{-4}	26.40×10^{-4}
15. Zero control $^{+/-}$	80	1.60×10^{-4}	0

recovery of TFT^R cell colonies from untreated control TK$^{+/-}$ cell cultures would average around 0.0057% under similar conditions.

Cytotoxicity and mutagenicity of 30 compounds

Table 3 presents a summary of data accumulated during the testing of 30 diverse agents or chemicals in the modified mouse lymphoma TK$^{+/-}$ → TK$^{-/-}$ assay as utilized in this laboratory. Collectively, the average control cloning efficiency for all experiments was 103 ± 22% (±1 S.D., n = 79) and the average

TABLE 2

PHENOTYPIC STABILITY OF PRESUMED TK$^-$/$^-$ (TFT^R) CELLS AFTER GROWTH IN NON-SELECTIVE MEDIUM FOLLOWED BY RECLONING IN SOFT AGAR CONTAINING 4 μg/ml TFT OR 100 μg/ml BUdR

TK$^-$/$^-$ clone source	Absolute cloning efficiency in soft-agar (%)	TFT^R colonies per 100 viable cells	BUdR colonies per 100 viable cells
1. GT1	61	98	106
2. GT2	75	118	104
3. GT3	28	96	89
4. GT3	83	117	108
5. GT5	81	109	105
6. GT6	84	103	98
7. GT7	68	100	90
8. GT8	50	114	105
9. GT9	84	103	102
10. GT10	97	101	102
11. TK$^-$/$^-$ 3.7.2C.110	104	97	103

Questions? Contact FDA/CDRH/OCE/DID at CDRH-FOISTATUS@fda.hhs.gov or call 301-796-8118.

Records processed under FOIA Request #2015-1305; Released by CDRH on 05-11-2016.

TABLE 3

SUMMARY OF CYTOTOXICITY AND MUTAGENICITY DATA FOR 30 CHEMICALS OR EXPERIMENTAL TREATMENTS IN THE MOUSE LYMPHOMA $TK^{+/-} \rightarrow TK^{-/-}$ MUTATION ASSAY

Those experiments which included Aroclor-induced S9 fraction from rat liver are indicated (+S9). Control cultures received solvent vehicle only. Absolute cloning efficiencies of solvent controls in soft agar are shown (CE%). Exposure time was 3 h except for compounds No. 2: 1 h; No. 11: 2 h; No. 12: 2 h; No. 18—19: 2 h; No. 23: 1 h; No. 24: 2 h; No. 26: 4 h: No. 28—29: 2 h.
Asterisks denote cultures containing visible compound precipitate.

Test compound or treatment	Concentration (molarity)	Cell survival (% of control)	Mutants per 10^4 survivors
1a. Acetone	0	100	0.46
(CE = 116%)	1.34×10^{-1}	76	0.39
	2.66×10^{-1}	70	0.54
	2.79×10^{-1}	82	0.49
	2.92×10^{-1}	75	0.51
	3.05×10^{-1}	72	0.60
	3.18×10^{-1}	66	0.53
	3.44×10^{-1}	55	0.64
	3.69×10^{-1}	56	0.42
	3.95×10^{-1}	41	0.54
1b. Acetone	0	100	0.34
(CE = 99%)	3.05×10^{-1}	66	0.31
	3.18×10^{-1}	79	0.30
	3.44×10^{-1}	49	0.28
	3.69×10^{-1}	27	0.31
	3.95×10^{-1}	11	0.35
	4.21×10^{-1}	3	0.32
	4.46×10^{-1}	0	—
	4.71×10^{-1}	0	—
2. *N*-Acetoxy-2-acetylamino-	0	100	0.33
fluorene (CE = 141%)	0.39×10^{-6}	91	0.74
	0.52×10^{-6}	84	0.87
	0.70×10^{-6}	83	1.17
	0.93×10^{-6}	69	0.91
	1.25×10^{-6}	50	1.09
	1.66×10^{-6}	41	1.42
	2.22×10^{-6}	34	1.42
	2.96×10^{-6}	13	2.27
3. 2-Acetylaminofluorene	0	100	0.55
(+S9) (CE = 82%)	0.53×10^{-4}	114	0.65
	0.71×10^{-4}	97	0.77
	0.94×10^{-4}	92	0.74
	1.26×10^{-4}	64	1.21
	1.68×10^{-4}	59	1.38
	2.24×10^{-4}	49	1.39
	2.99×10^{-4}	38	1.64
	3.99×10^{-4}	33	2.04
4. Acridine Orange	0	100	0.62
(+S9) (CE = 107%)	1.73×10^{-4}	90	0.82
	2.31×10^{-5}	106	0.80
	3.08×10^{-5}	107	0.80
	4.11×10^{-5}	85	1.24
	5.48×10^{-5}	87	1.44
	7.31×10^{-5}	93	1.62
	9.75×10^{-5}	56	2.46
	13.00×10^{-5}	1	3.39

Questions? Contact FDA/CDRH/OCE/DID at CDRH-FOISTATUS@fda.hhs.gov or call 301-796-8118.

Records processed under FOIA Request #2015-1305; Released by CDRH on 05-11-2016.

TABLE 3 (continued)

Test compound or treatment	Concentration (molarity)	Cell survival (% of control)	Mutants per 10^4 survivors
5a. 9-Aminoacridine (CE = 129%)	0	100	0.48
	1.77×10^{-6}	98	0.82
	2.37×10^{-6}	113	0.76
	3.16×10^{-6}	108	0.94
	4.21×10^{-6}	86	0.74
	5.61×10^{-6}	94	0.62
	7.49×10^{-6}	56	0.69
	9.99×10^{-6}	84	0.50
	13.33×10^{-6}	24	2.42
	17.78×10^{-6}	16	3.92
5b. 9-Aminoacridine (CE = 96%)	0	100	0.34
	3.16×10^{-6}	83	0.48
	4.21×10^{-6}	63	0.61
	5.61×10^{-6}	33	0.98
	7.99×10^{-6}	10	3.02
	9.99×10^{-6}	7	3.91
	13.33×10^{-6}	2	2.00
	17.78×10^{-6}	0	—
5c. 9-Aminoacridine (CE = 91%)	0	100	0.35
	1.78×10^{-6}	99	0.38
	3.16×10^{-6}	78	0.40
	4.21×10^{-6}	55	0.42
	5.61×10^{-6}	31	0.74
	7.99×10^{-6}	8	3.78
	9.99×10^{-6}	0	—
	13.33×10^{-6}	0	—
	17.78×10^{-6}	0	—
	23.76×10^{-6}	0	—
5d. 9-Aminoacridine (CE = 96%)	0	100	0.31
	1.78×10^{-6}	93	0.36
	2.36×10^{-6}	81	0.43
	3.16×10^{-6}	63	0.41
	4.21×10^{-6}	56	0.39
	5.61×10^{-6}	52	0.26
	7.49×10^{-6}	26	0.67
	9.99×10^{-6}	6	1.64
	13.66×10^{-6}	0	—
6. Aniline (+S9) (CE = 87%)	0	100	0.52
	1.18×10^{-3}	81	0.80
	1.57×10^{-3}	72	0.77
	2.10×10^{-3}	54	0.95
	2.80×10^{-3}	52	0.93
	3.74×10^{-3}	41	1.10
	4.98×10^{-3}	38	1.17
	6.65×10^{-3}	40	1.02
	8.87×10^{-3}	34	0.80
	11.83×10^{-3}	33	0.95
7. Anthracene (+S9) (CE = 98%)	0	100	0.53
	1.68×10^{-5}	118	0.58
	2.25×10^{-5}	115	0.58
	3.00×10^{-5}	118	0.51
	4.00×10^{-5}	118	0.66
	5.34×10^{-5}	87	0.76
	7.12×10^{-5}	35	1.11
	9.60×10^{-5}	14	1.30
	12.70×10^{-5}	2	2.77

Questions? Contact FDA/CDRH/OCE/DID at CDRH-FOISTATUS@fda.hhs.gov or call 301-796-8118.

Records processed under FOIA Request #2015-1305; Released by CDRH on 05-11-2016.

TABLE 3 (continued)

Test compound or treatment	Concentration (molarity)	Cell survival (% of control)	Mutants per 10^4 survivors
8a. Auramine 0 (+S9) (CE = 139%)	0	100	0.61
	0.44×10^{-4}	93	0.72
	0.59×10^{-4}	87	0.67
	0.79×10^{-4}	94	0.55
	1.05×10^{-4}	68	0.77
	1.40×10^{-4}	57	0.79
	*1.87×10^{-4}	8	1.47
	*2.49×10^{-4}	1	2.23
	*3.32×10^{-4}	0.01	5.00
8b. Auramine 0 (+S9) (CE = 94%)	0	100	0.36
	0.44×10^{-4}	103	0.35
	0.59×10^{-4}	93	0.33
	0.79×10^{-4}	77	0.44
	1.05×10^{-4}	71	0.40
	1.40×10^{-4}	28	0.68
	*1.87×10^{-4}	4	1.68
	*2.49×10^{-4}	0	—
	*3.32×10^{-4}	0	—
9. 1,2-Benzanthracene (+S9) (CE = 108%)	0	100	0.77
	1.36×10^{-5}	96	0.81
	1.81×10^{-5}	101	0.84
	2.42×10^{-5}	99	1.00
	3.22×10^{-5}	89	1.23
	4.30×10^{-5}	31	1.47
	5.47×10^{-5}	0	—
	7.65×10^{-5}	0	—
	10.21×10^{-5}	0	—
10. Benzo[*a*]pyrene (+S9) (CE = 107%)	0	100	0.68
	0.53×10^{-5}	81	1.36
	0.70×10^{-5}	65	1.79
	0.94×10^{-5}	45	1.47
	1.25×10^{-5}	54	1.87
	1.67×10^{-5}	50	2.60
	2.23×10^{-5}	33	2.49
	2.97×10^{-5}	24	2.65
	3.96×10^{-5}	14	3.97
11. Caffeine (CE = 90%)	0	100	0.65
	1.52×10^{-2}	105	0.63
	1.83×10^{-2}	77	0.69
	2.20×10^{-2}	92	0.54
	2.64×10^{-2}	69	0.51
	3.17×10^{-2}	81	0.80
	3.80×10^{-2}	57	0.99
	4.56×10^{-2}	13	0.97
	5.47×10^{-2}	0	—
12. Dimethyl sulfoxide (CE = 103%)	0	100	0.56
	7.04×10^{-1}	113	0.66
	9.86×10^{-1}	84	0.72
	12.68×10^{-1}	87	0.61
	14.08×10^{-1}	71	0.44
	15.49×10^{-1}	64	0.79
	16.89×10^{-1}	52	0.67
	18.31×10^{-1}	16	1.56
	21.13×10^{-1}	3	1.11
13. Diphenylamine (+S9) (CE = 72%)	0	100	0.79
	3.79×10^{-5}	83	0.81
	5.06×10^{-5}	98	0.91
	6.75×10^{-5}	106	0.73
	9.00×10^{-5}	56	1.13
	12.01×10^{-5}	44	0.95
	16.02×10^{-5}	41	0.82
	21.36×10^{-5}	30	0.98

Questions? Contact FDA/CDRH/OCE/DID at CDRH-FOISTATUS@fda.hhs.gov or call 301-796-8118.

Records processed under FOIA Request #2015-1305; Released by CDRH on 05-11-2016.

TABLE 3 (continued)

Test compound or treatment	Concentration (molarity)	Cell survival (% of control)	Mutants per 10^4 survivors
14. 1,2-Epoxybutane	0	100	0.66
(CE = 73%)	0.87×10^{-3}	69	1.14
	1.16×10^{-3}	90	1.18
	1.54×10^{-3}	103	1.11
	2.06×10^{-3}	63	1.36
	2.75×10^{-3}	46	1.75
	3.66×10^{-3}	40	2.73
	4.89×10^{-3}	17	3.50
	6.52×10^{-3}	3	2.80
15. Ethanol	0	100	0.73
(CE = 159%)	1.73×10^{-1}	91	0.69
	2.60×10^{-1}	82	0.77
	3.46×10^{-1}	81	0.81
	4.33×10^{-1}	75	0.74
	5.20×10^{-1}	63	0.92
	6.06×10^{-1}	52	0.68
	6.93×10^{-1}	36	0.60
	7.79×10^{-1}	3	0.72
16a. Ethyl methanesulfonate	0	100	0.51
(CE = 94%)	0.27×10^{-3}	110	1.00
	0.35×10^{-3}	118	1.06
	0.47×10^{-3}	96	1.50
	0.63×10^{-3}	103	1.67
	0.84×10^{-3}	105	1.78
	1.12×10^{-3}	102	2.03
	1.50×10^{-3}	112	2.77
	2.00×10^{-3}	77	4.11
16b. Ethyl methanesulfonate	0	100	0.34
(CE = 97%)	0.27×10^{-3}	96	1.04
	0.35×10^{-3}	122	0.96
	0.47×10^{-3}	104	1.25
	0.63×10^{-3}	106	1.62
	0.84×10^{-3}	93	1.96
	1.12×10^{-3}	94	2.68
	1.50×10^{-3}	88	3.36
	2.00×10^{-3}	77	4.58
17a. Hydrazine sulfate	0	100	0.48
(CE = 143%)	0.27×10^{-3}	111	0.41
	0.37×10^{-3}	118	0.50
	0.49×10^{-3}	106	0.48
	0.65×10^{-3}	109	0.53
	0.87×10^{-3}	96	0.64
	1.16×10^{-3}	81	0.91
	1.55×10^{-3}	67	1.16
	2.07×10^{-3}	47	2.10
	2.76×10^{-3}	42	2.03
17b. Hydrazine sulfate	0	100	0.40
(CE = 88%)	0.37×10^{-3}	59	0.47
	0.49×10^{-3}	49	0.49
	0.65×10^{-3}	42	0.50
	0.87×10^{-3}	23	0.70
	1.16×10^{-3}	24	0.69
	1.55×10^{-3}	22	0.73
	2.07×10^{-3}	26	0.49
	2.76×10^{-3}	25	0.53

Questions? Contact FDA/CDRH/OCE/DID at CDRH-FOISTATUS@fda.hhs.gov or call 301-796-8118.

Records processed under FOIA Request #2015-1305; Released by CDRH on 05-11-2016.

TABLE 3 (continued)

Test compound or treatment	Concentration (molarity)	Cell survival (% of control)	Mutants per 10^4 survivors
17c. Hydrazine sulfate (CE = 93%)	0	100	0.25
	0.37×10^{-3}	66	0.39
	0.49×10^{-3}	64	0.33
	0.65×10^{-3}	50	0.44
	0.87×10^{-3}	40	0.62
	1.16×10^{-3}	41	0.71
	1.55×10^{-3}	41	0.57
	2.07×10^{-3}	28	0.70
	2.76×10^{-3}	38	0.48
17d. Hydrazine sulfate (CE = 91%)	0	100	0.80
	0.87×10^{-3}	92	0.79
	1.16×10^{-3}	93	0.75
	1.55×10^{-3}	79	0.71
	2.07×10^{-3}	85	0.71
	2.76×10^{-3}	77	0.82
	3.68×10^{-3}	78	0.84
	4.91×10^{-3}	66	0.79
	6.55×10^{-3}	27	1.30
17e. Hydrazine sulfate (CE = 77%)	0	100	0.81
	0.87×10^{-3}	70	0.69
	1.16×10^{-3}	70	0.69
	1.55×10^{-3}	44	0.72
	2.07×10^{-3}	58	0.86
	2.76×10^{-3}	68	0.88
	3.68×10^{-3}	42	1.16
	4.91×10^{-3}	60	0.83
	6.55×10^{-3}	48	0.64
18. ICR 170H (CE = 172%)	0	100	0.40
	1.00×10^{-7}	60	5.32
	1.33×10^{-7}	59	6.50
	1.78×10^{-7}	33	11.14
	2.37×10^{-7}	23	13.06
	3.16×10^{-7}	7	19.58
	4.22×10^{-7}	1	18.94
19. ICR 191G (CE = 73%)	0	100	0.78
	1.60×10^{-6}	76	3.40
	2.14×10^{-6}	17	10.52
	3.85×10^{-6}	6	17.50
	3.80×10^{-6}	4	23.54
	5.07×10^{-6}	1	28.87
20. 6-Mercaptopurine (CE = 94%)	0	100	0.56
	1.20×10^{-5}	29	2.60
	1.60×10^{-5}	21	3.35
	2.13×10^{-5}	24	2.73
	2.84×10^{-5}	19	3.24
	3.79×10^{-5}	13	4.18
	5.06×10^{-5}	14	4.21
	6.75×10^{-5}	12	3.31
	9.00×10^{-5}	8	3.58
21a. Methanol (CE = 154%)	0	100	0.58
	7.21×10^{-1}	82	0.71
	8.37×10^{-1}	82	0.57
	9.52×10^{-1}	80	0.75
	10.66×10^{-1}	80	0.51
	11.79×10^{-1}	56	0.77

Questions? Contact FDA/CDRH/OCE/DID at CDRH-FOISTATUS@fda.hhs.gov or call 301-796-8118.

Records processed under FOIA Request #2015-1305; Released by CDRH on 05-11-2016.

TABLE 3 (continued)

Test compound or treatment	Concentration (molarity)	Cell survival (% of control)	Mutants per 10^4 survivors
21b. Methanol	0	100	0.27
(CE = 108%)	7.21×10^{-1}	86	0.33
	8.37×10^{-1}	81	0.23
	9.52×10^{-1}	80	0.36
	10.66×10^{-1}	64	0.34
	11.79×10^{-1}	73	0.35
	12.89×10^{-1}	80	0.30
	14.00×10^{-1}	66	0.27
	15.09×10^{-1}	11	0.30
22. 3-Methylcholanthrene	0	100	0.62
(+S9) (CE = 114%)	0.32×10^{-5}	116	0.73
	0.42×10^{-5}	99	0.85
	0.56×10^{-5}	111	0.92
	0.75×10^{-5}	107	1.28
	1.00×10^{-5}	129	1.68
	1.33×10^{-5}	101	1.82
	1.80×10^{-5}	91	2.27
	2.37×10^{-5}	61	3.20
23. *N*-Nitroso-*N*-methylurea	0	100	0.46
(CE = 104%)	1.87×10^{-5}	88	0.80
	2.50×10^{-5}	64	1.20
	3.33×10^{-5}	55	1.45
	4.45×10^{-5}	60	1.35
	5.93×10^{-5}	45	1.62
	7.92×10^{-5}	25	2.68
24. 4-Nitroquinoline-1-oxide	0	100	0.50
(CE = 121%)	3.93×10^{-7}	62	2.79
	5.25×10^{-7}	48	3.20
	7.00×10^{-7}	51	3.10
	9.34×10^{-7}	28	3.84
	12.46×10^{-7}	17	4.27
	16.62×10^{-7}	9	4.76
25. Pyrene	0	100	0.33
(+S9) (CE = 144%)	0.96×10^{-5}	110	0.28
	1.27×10^{-5}	162	0.24
	1.70×10^{-5}	105	0.43
	2.27×10^{-5}	107	0.44
	3.03×10^{-5}	94	0.45
	4.05×10^{-5}	62	0.54
	5.40×10^{-5}	17	0.57
	7.20×10^{-5}	0	—
26. Quercetin	0	100	0.62
(CE = 113%)	1.33×10^{-5}	100	0.75
	1.77×10^{-5}	102	0.69
	2.37×10^{-5}	138	0.74
	3.16×10^{-5}	76	0.84
	4.21×10^{-5}	55	1.07
	5.62×10^{-5}	58	1.00
	7.50×10^{-5}	15	1.43
	10.00×10^{-5}	19	1.79
27. Serum deprivation	10% serum	100	0.56
(CE = 78%)	4% serum	105	0.48
	2% serum	58	0.42
	1% serum	34	0.52
	0% serum	2	0.20

Questions? Contact FDA/CDRH/OCE/DID at CDRH-FOISTATUS@fda.hhs.gov or call 301-796-8118.

Records processed under FOIA Request #2015-1305; Released by CDRH on 05-11-2016.

TABLE 3 (continued)

Test compound or treatment	Concentration (molarity)	Cell survival (% of control)	Mutants per 10^4 survivors
28. Sodium phenobarbital (CE = 105%)	0	100	0.48
	7.39×10^{-3}	74	0.45
	8.43×10^{-3}	60	0.53
	9.61×10^{-3}	72	0.42
	10.95×10^{-3}	103	0.30
	12.49×10^{-3}	81	0.41
	14.24×10^{-3}	76	0.45
	16.23×10^{-3}	79	0.67
	18.50×10^{-3}	14	1.14
29. Sucrose (CE = 109%)	0	100	0.50
	0.60×10^{-1}	100	0.64
	0.72×10^{-1}	111	0.50
	0.87×10^{-1}	48	0.55
	1.04×10^{-1}	90	0.48
	1.25×10^{-1}	52	0.67
	1.50×10^{-1}	54	0.59
	1.80×10^{-1}	27	0.45
	2.16×10^{-1}	0	—
30a. Tetracene (+S9) (CE = 90%)	0	100	0.84
	1.26×10^{-5}	99	0.76
	1.68×10^{-5}	112	0.69
	2.25×10^{-5}	106	0.70
	$*2.99 \times 10^{-5}$	121	0.84
	$*4.00 \times 10^{-5}$	120	0.68
	$*5.34 \times 10^{-5}$	90	0.72
	$*7.12 \times 10^{-5}$	92	0.94
	$*9.50 \times 10^{-5}$	66	0.66
30b. Tetracene (+S9) (CE = 101%)	0	100	0.36
	$*2.99 \times 10^{-5}$	99	0.36
	$*4.00 \times 10^{-5}$	104	0.31
	$*5.34 \times 10^{-5}$	102	0.28
	$*7.12 \times 10^{-5}$	110	0.21
	$*9.50 \times 10^{-5}$	110	0.31
	$*12.67 \times 10^{-5}$	107	0.29
	$*16.90 \times 10^{-5}$	107	0.39
	$*22.55 \times 10^{-5}$	98	0.26

background-mutant frequency for all solvent controls was $0.50 \pm 0.16/10^4$ survivors (±1 S.D., $n = 79$). Cloning efficiencies >100% frequently occur when an interval of up to 4 h elapses between the cell counting and the actual plating of cells in soft-agar, based on those early counts. Our background or control mutation frequencies compare quite favorably with those reported by Clive et al. [7].

Exogenous microsomal enzymes were provided by including Aroclor-induced or, in some cases, non-induced rat-liver S9 fraction in the reaction vessel during the test procedure in those cases where previous studies had indicated the likelihood of metabolic activation. Limited experience in our lab with compounds such acridine orange indicates that the omission of S9 in some instances results in higher toxicity but mutagenicity is maintained. Other compounds such as

Questions? Contact FDA/CDRH/OCE/DID at CDRH-FOISTATUS@fda.hhs.gov or call 301-796-8118.

Records processed under FOIA Request #2015-1305; Released by CDRH on 05-11-2016.

quercetin are relatively uneffected by the presence of S9. A third situation is encountered with compounds such as anthracene in which toxicity is considerably greater when S9 is included.

Analysis of mutagenicity data

Preliminary analysis of experimental data for both established mutagens and nonmutagens demonstrated that the following general assumptions could be made. When known mutagens were tested, the absolute number of induced mutants increased in a dose-related manner as survival decreased, then leveled off or in some cases, actually decreased as overall survival continued to fall. This plateau was usually reached at mutagen levels permitting >20% but <100% survival. Further, the sample data for treated and control data appeared to fit the conditions needed for testing by 2-sample *t*-tests. Having made these observations, we proceeded to compare the actual numbers of TFT^R mutants in treated versus control plates for each compound or treatment, providing that 2 criteria were met, i.e., doses were in 1 : 1.334 multiples (except caffeine and some solvents) and some cytotoxicity was observed, preferably spanning 20—100% relative cell survival. As detailed in Table 4, comparisons of mutant recovery were made as (1) an increase or decrease over corresponding controls expressed as the ratio of the geometric sample means, and (2) as a 2-sample *t*-test statistic between the 2-sample means where all mutant counts were transformed to natural logarithms. This analytical approach provided clear distinctions between most of the "positive mutagens" and "negative or nonmutagens" by means of a simple parametric probability model. These distinctions were particularly useful in interpreting results with compounds such as anthracene where mutational activity was essentially flat until high levels of cytotoxicity were reached (curvilinear response). We would expect, a priori, true mutagens to produce consistent increases in the numbers of induced mutants as compound toxicity increased provided neither mutant nor wild-type cell possesses a selective survival advantage, to a point where the actual killing of cells including newly mutated cells exceeded the recovery of viable mutants. Such observations would tend to support the contention that lethality and mutational lesions are associated, but independent.

The data thus generated and summarized in Tables 3 and 4 were then interpreted in the following manner. First, the mutagenicity results for all 30 compounds or treatments were reviewed to identify those demonstrating a consistent increase in mutant frequency, as mutagen concentration was increased. From Table 3, these included N-AcO-AAF, AAF, acridine orange, aniline, 1,2-benzanthracene, benzo[*a*]pyrene, EMS, 1,2-epoxybutane, 1CR 17OH, 1CR 191G, 6-mercaptopurine, MCA, NMU, 4NQO and quercetin. Of these compounds, all produced a 2-sample *t* statistic of at least $p < 0.05$. But for quercetin, the ratio of geometric means for TFT^R mutants/plate in treated versus control cultures was low. The latter compound was thus classified as a weak mutagen, since repeated testing produced slight, but reproducible, dose-dependent increases in mutant frequencies (Fig. 4). Aniline and 1,2-benzanthracene also caused relatively small but reproducible and dose-dependent increases in mutant frequencies (Figs. 5, 6). On the basis of 3 out of 5 trials (Table 4), we conclude that hydrazine sulfate is not mutagenic under these experimental condi-

Questions? Contact FDA/CDRH/OCE/DID at CDRH-FOISTATUS@fda.hhs.gov or call 301-796-8118.

Records processed under FOIA Request #2015-1305; Released by CDRH on 05-11-2016.

TABLE 4

RECOVERY OF TFT^R MUTANTS IN TREATED VERSUS CONTROL PLATES EXPRESSED AS A RATIO OF SAMPLE MEANS AND BY A 2-SAMPLE $\log_e$ *t*-TEST ON SAMPLE MEANS

For comparison, results were also analyzed by the procedures of Clive et al. [12]. A linear regression plot was obtained for induced mutant frequency (IMF ± SE) vs. log of the surviving fraction. Values for IMF and SE(IMF) were obtained for 10% survival by interpolation. A 10% survival cutoff was used for the 2 times control mutant frequency ($2 \times f_k$) criterion. *r* = product—moment correlation coefficient of survival vs. mutant frequency.

Treatment	Geometric mean number of mutants/plate for 20% or more survival			2-Sample *t*-test data			Clive procedure results		
	Treated	Control	Ratio	Harmonic *d* of *f*	*t*	Sig.	$3 \times SE$ (IMF)	$2 \times f_k$	*r*
Acetone	49.98	53.38	0.936	5.40	−0.465	>0.10	—[a]	Neg	−0.317
Acetone	28.11	33.94	0.828	8.00	−0.681	>0.10	Neg	Neg	−0.008
NA-AAF	105.93	46.40	2.293	9.33	8.125	<0.01	Pos	Pos	−0.924
AAF	78.59	44.77	1.755	9.60	6.864	<0.01	Pos	Pos	−0.977
Acridine Orange	118.03	66.17	1.784	5.25	2.850	<0.05	Pos	Pos	−0.809
9-Aminoacridine	80.91	60.29	1.342	5.33	1.356	>0.10	Pos	Pos	−0.917
9-Aminoacridine	46.12	30.67	1.504	7.20	2.659	<0.05	Pos	Pos	−0.790
9-Aminoacridine	39.82	31.30	1.272	8.00	2.457	<0.05	Pos	Pos	−0.929
9-Aminoacridine	31.85	29.51	1.079	9.00	0.475	>0.10	Pos	Pos	−0.945
Aniline	65.70	45.47	1.442	9.82	4.179	<0.01	Pos	Pos	−0.806
Anthacene	61.87	52.63	1.176	5.14	1.021	>0.10	Pos	Pos	−0.981
Auramine 0	76.69	85.38	0.898	5.00	−1.052	>0.10	Pos	Neg	−0.915
Auramine 0	38.10	33.27	1.145	8.57	1.158	>0.10	Pos	Neg	−0.988
1,2-Benzanthracene	111.79	82.07	1.362	5.00	2.551	<0.05	Pos	Neg	−0.842
Benzo[*a*]pyrene	119.32	72.84	1.638	5.25	4.180	<0.01	Pos	Pos	−0.919
Caffeine	53.43	57.62	0.927	9.00	−0.633	>0.10	—	Neg	−0.641
DMSO	65.98	54.84	1.203	9.00	1.198	>0.10	Pos	Pos	−0.812
Diphenylamine	56.20	57.09	0.984	9.60	−0.165	>0.10	—	Neg	−0.179
EMS	148.02	43.63	3.393	9.60	7.093	<0.01	Pos	Pos	−0.851
EMS	164.08	32.20	5.096	9.60	8.518	<0.01	Pos	Pos	−0.774
1,2-Epoxybutane	101.79	47.46	2.145	5.14	5.119	<0.01	Pos	Pos	−0.787
Ethanol	109.06	115.80	0.942	5.25	−0.705	>0.10	Neg	Neg	0.208
Hydrazine sulfate	82.21	69.11	1.190	5.40	0.496	>0.10	Pos	Pos	−0.984
Hydrazine sulfate	47.23	33.92	1.392	9.60	4.571	<0.01	—	Neg	−0.801
Hydrazine sulfate	44.42	22.60	1.965	9.60	5.981	<0.01	Pos	Pos	−0.911
Hydrazine sulfate	73.33	62.10	1.181	9.60	1.362	>0.10	—	Neg	−0.208
Hydrazine sulfate	67.11	72.25	0.929	9.60	−1.423	>0.05	—	Neg	−0.902
ICR 17OH	546.35	67.92	8.044	4.80	20.557	<0.01	Pos	Pos	−0.887
ICR 191G	214.46	56.66	3.785	3.00	40.243	<0.01	Pos	Pos	−0.990
6MP	73.17	52.63	1.390	4.50	4.223	<0.01	Pos	Pos	−0.906
Methanol	90.15	88.96	1.013	8.57	0.095	>0.10	—	Neg	−0.569
Methanol	30.44	29.13	1.045	9.33	0.430	>0.10	—	Neg	−0.041
3 MCA	160.40	70.74	2.268	5.33	3.155	<0.05	Pos	Pos	−0.728
NMU	108.42	47.33	2.291	5.14	6.528	<0.01	Pos	Pos	−0.995
4NQO	228.17	60.53	3.770	4.80	16.012	<0.01	Pos	Pos	−0.899
Pyrene	46.12	46.76	0.986	5.14	−0.087	>0.10	—	Neg	−0.745
Quercetin	88.95	70.10	1.269	5.25	2.502	<0.05	Pos	Pos	−0.969
Serum deprivation	28.61	43.65	0.655	9.00	−3.428	<0.01	Neg	Neg	0.489
Na phenobarbital	45.57	48.08	0.948	9.33	−0.362	>0.10	—	Pos	−0.906
Sucrose	50.25	52.18	0.963	9.33	−0.292	>0.10	—	Neg	0.019
Tetracene	77.63	75.33	1.031	5.33	0.212	>0.10	—	Neg	0.141
Tetracene	28.37	36.20	0.784	9.60	−2.144	>0.05	—	Neg	0.000

[a] Where not shown, data was insufficient for $3 \times SE(IMF)$ calculation.

Questions? Contact FDA/CDRH/OCE/DID at CDRH-FOISTATUS@fda.hhs.gov or call 301-796-8118.

Records processed under FOIA Request #2015-1305; Released by CDRH on 05-11-2016.

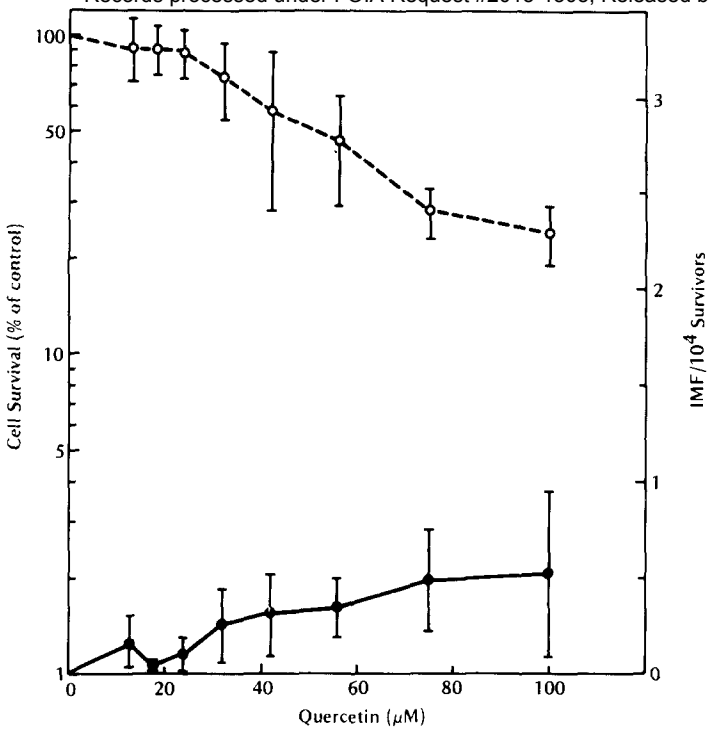

Fig. 4. Mutagenicity and cytotoxicity of quercetin in L5178Y/TK$^{+/-}$ cells. Combined data is shown from 4 separate Expts. performed on different days (treatment = 3 h, no S9). Open circles represent the mean cell survival ±1 S.D. at each concentration; solid circles indicate the corresponding average induced mutation frequencies (IMF), ±1 S.D.

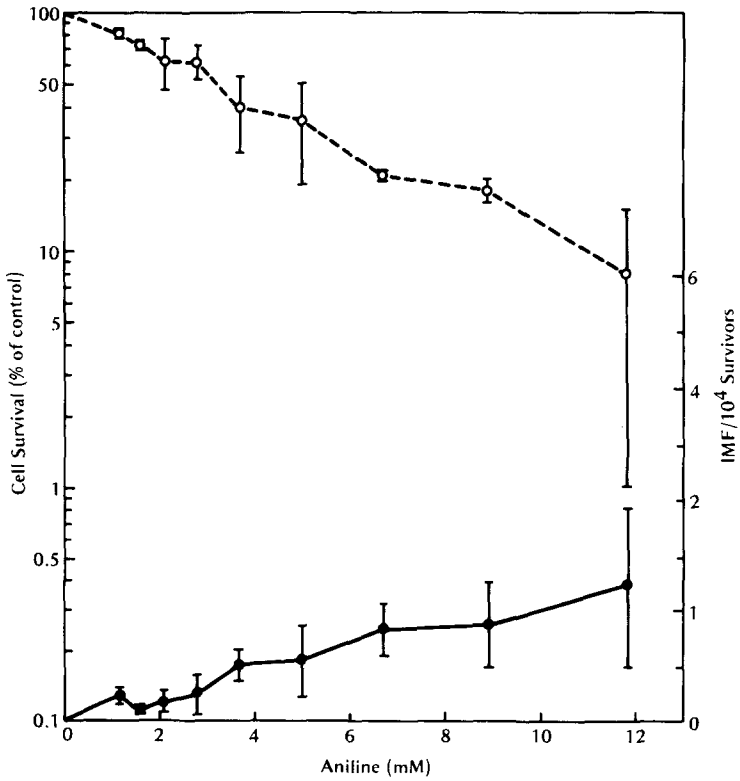

Fig. 5. Mutagenicity and cytotoxicity of aniline in L5178Y/TK$^{+/-}$ cells. Data was pooled from 3 separate Expts. completed on different days (treatment = 3 h, + non-induced rat-liver S9). Open circles show mean cell survival ±1 S.D. at each concentration; solid circles denote mean induced mutation frequencies (IMF), ±1 S.D.

Questions? Contact FDA/CDRH/OCE/DID at CDRH-FOISTATUS@fda.hhs.gov or call 301-796-8118

Records processed under FOIA Request #2015-1305; Released by CDRH on 05-11-2016.

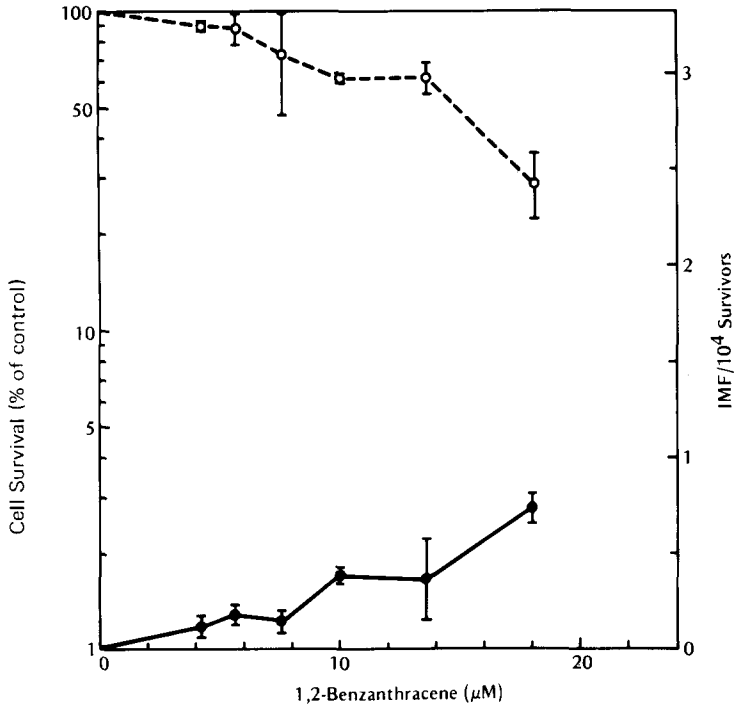

Fig. 6. Mutagenicity and cytotoxicity of 1,2-benzanthracene in L5178Y $TK^{+/-}$ cells. Pooled data from 3 separate Expts. performed on different days is illustrated (treatment = 3 h, + non-induced rat-liver S9). Open circles represent mean cell survival ±1 S.D.; solid circles indicate the mean induced mutant frequencies (IMF) ±1 S.D. at each mutagen concentration.

tions. Results with 9-aminoacridine (Table 4) were inconsistent with the responses of most other Ames-positive mutagens. While an abrupt, sharp increase in mutation frequency over background could be always be obtained

TABLE 5

MONTE CARLO STUDIES OF 2 STATISTICAL METHODS

Each study consisted of 1000 replications each as described in Materials and Methods. A 10% survival cutoff was used for the $2 \times f_k$ method and a 20% cutoff for the $\log_e t$ test. Each result represents a percent of 1000 trials which were declared positive.

Degree of mutagenicity		Degree of cytotoxicity			
		None ($B = 0$)	Slight ($B = 1$)	Moderate ($B = 10$)	Severe ($B = 100$)
None	$\log_e t$	4.6	4.8	4.7	5.4
($D = 0$)	$2 \times f_k$	38.4	37.2	54.9	93.4
Slight	$\log_e t$	9.2	8.9	11.5	8.3
($D = 1$)	$2 \times f_k$	39.6	41.2	60.1	93.9
Moderate	$\log_e t$	73.7	72.0	76.3	37.6
($D = 10$)	$2 \times f_k$	81.2	80.1	91.0	97.9
Severe	$\log_e t$	99.9	99.9	99.9	99.9
($D = 100$)	$2 \times f_k$	99.9	99.9	99.9	99.9

Questions? Contact FDA/CDRH/OCE/DID at CDRH-FOISTATUS@fda.hhs.gov or call 301-796-8118.

Records processed under FOIA Request #2015-1305; Released by CDRH on 05-11-2016.

TABLE 6

MUTAGENICITY OF 30 SUBSTANCES IN THE MOUSE-LYMPHOMA $TK^{+/-} \rightarrow TK^{-/-}$ ASSAY VERSUS AMES *S. typhimurium* MUTAGENICITY AND IN VIVO CARCINOGENICITY

Test agent	Carcinogenicity [a]	Mouse-lymphoma [b] mutagenicity	Ames [c] mutagenicity
1. Acetone	0	0	0
2. *N*-Acetoxy-2-acetylaminofluorene	+	+	+
3. 2-Acetylaminofluorene	+	+	+
4. Acridine orange	?	+	+
5. 9-Aminoacridine	unk	I	+
6. Aniline	+	+	0
7. Anthracene	0	0	0
8. Auramine O	+	0	0
9. 1,2-benzathracene	+	+	+
10. Benzo[*a*]pyrene	+	+	+
11. Caffeine	0	0	0
12. Dimethylsulfoxide	0	0	0
13. Diphenylamine	0	0	unk
14. 1,2-Epoxybutane	?	+	w+
15. Ethanol	0	0	0
16. Ethyl ethanesulfonate	+	+	+
17. Hydrazine sulfate	+	0	w+/0
18. ICR 17OH	+	+	+
19. ICR 191G	0	+	+
20. 6-Mercaptopurine	?	+	+
21. Methanol	unk	0	0
22. 3-Methylcholanthrene	+	+	+
23. *N*-Nitroso-*N*-methylurea	+	+	+
24. 4-Nitroquinoline-1-oxide	+	+	+
25. Pyrene	0	0	0
26. Quercetin	unk	w	+
27. Serum deprivation	0	0	0
28. Sodium phenobarbital	+	0	0
29. Sucrose	unk	0	unk
30. Tetracene	0	0	+

[a] *Carcinogenicity.* The classification of these chemicals as either carcinogens (+), noncarcinogens (0), of unknown potential (unk), or of uncertain status due to conflicting or limited data (?) was based on current literature sources. It is recognized that individual classifications may be subject to revision as new data becomes available. Specific data sources are as follows: Chemicals Nos. 1, 3, 9, 11, 14, 17, 28: Survey of Compounds Which Have Been Tested for Carcinogenic Activity, USPHS, Publication No. 149, Washington, DC (through 1972-1973 volume); Nos. 2, 8, 22, 24, 25: J.C. Arcos, and M.F. Argus (1974) Chemical Induction of Cancer, Academic Press, New York, Vol. II A and B; No. 9: Registry of Toxic Effects of Chemical Substances (1976), HEW Publication No. 760191, Rockville, Md; Nos. 8—10, 16, 17, 23, 28: IARC Monograph on the Evaluation of Carcinogenic Risk of Chemicals to Man (1972—1978) IARC, Lyon, Vols. 1—17; Nos. 4, 6, 23, 28: L. Tomatis et al. (1978) Cancer Res., 38, 877—885; Nos. 7, 12, 13: J.A. DiPaolo et al. (1973) Arch. Pathol., 95, 380—285; Nos. 7, 25, 30: A. Dipple (1976) in: C. Searle, (Ed.), Chemical Carcinogens, American Chemical Society, Washington, DC; Nos. 18, 19: J. McCann (1975) Proc. Natl. Acad. Sci. (U.S.A.) 72, 5135—5139; No. 6: NCI Carcinogenesis, Technical Report Series No. 130 (1978).

[b] *Mouse-lymphoma mutagenicity.* The status of individual test substances as non-mutagenic (0), weakly active (w), indeterminate (I), or mutagenic (+) was based on the interpretation of results according to those criteria discussed in the text.

[c] *Ames mutagenicity.* Individual chemicals were classified as non-mutagenic (0), weakly mutagenic (w+), or mutagenic (+) according to J. McCann et al. (1975) Proc. Natl. Acad. Sci. (U.S.A.), 72, 5135—5139; except as follows: No. 12: M.J. Voll et al. (1977) Ann. N.Y. Acad. Sci., 298, 104—110; No. 17: (o) V.F. Simmon (1979) J. Natl. Cancer Inst., 62, 893—899; No. 20: B. Herbold and W. Buselmaier (1976) Mutation Res., 40, 73—84; No. 21: V.F. Simmon et al. (1977) Progr. Genet. Toxicol., 2, 249—258; No. 26: L.F. Bjeldanes and G.W. Chang (1977) Science, 197, 577—578; No. 30: T.L. Gibson et al. (1978) Mutation Res., 153—161.

Questions? Contact FDA/CDRH/OCE/DID at CDRH-FOISTATUS@fda.hhs.gov or call 301-796-8118.

Records processed under FOIA Request #2015-1305; Released by CDRH on 05-11-2016.

as the dosage was increased beyond 6 μM, these increases were accompanied by low to very low cell survival (6, 8, 10 and 24% resp. in 4 independent trials). These interpretations are summarized in Table 6 along with corresponding data on the carcinogenicity and Ames mutagenicity for these compounds. As shown in Table 5, we compared 2 statistical methods or decision rules by using computer-simulated sampling data in a Monte Carlo study of hypothetical conditions ranging from a category of no mutagenicity/cytotoxicity to severe mutagenicity/cytotoxicity. These results predict a comparatively low false positive rate when the $\log_e t$ test is used on experimental data but the detection rate for weak mutagens will be low.

Discussion

In recognition of the need for a dependable routine gene-mutation assay in a mammalian cell as part of an overall genetic toxicology test battery, we have attempted to validate the mouse-lymphoma $TK^{+/-} \rightarrow TK^{-/-}$ assay as modified by ourselves and others [1,18]. Specifically, we wished to answer the following questions: (1) do TFT^R cell clones represent true $TK^{-/-}$ mutants?, (2) what solvent vehicles can be used and are they free of mutagenic potential themselves?, (3) does this assay erroneously detect mutagenic activity in "non-mutagens", (4) does this assay fail to detect known mutagenic carcinogens?, (4) how can objective distinctions between positive or negative results be made?, (5) how does this assay correlate with other tests?, and (6) what advantages does this test offer over existing short-term tests?

Our results from 11 test-derived TFT^R and presumably $TK^{-/-}$ mutants affirm these cell clonal lines possess little or no thymidine kinase activity as measured by [^{14}C]thymidine uptake under optimal growth conditions even after >33 cell doublings in non-selective media. Further, these same TFT^R mutants retained ~100% resistance to 4 μg/ml TFT and ~100% cross resistance to 100 μg/ml BUdR.

In general, short-term in vitro testing for mutagenicity is effected by dissolving test compounds as highly concentrated (10×, 100×, 1000×) solutions in aqueous or organic solvents such as saline, distilled water or acetone, ethanol and DMSO, resp. To avoid partitioning problems and possible loss of compounds due to aqueous insolubility, we generally follow the procedures of Clive and Spector [13] and add 0.1 ml of a 100× (100 times the desired final concentration) serial dilution of test compound dissolved in DMSO or ethanol directly to 10-ml cell cultures so that 1% of the total volume is solvent vehicle. We have demonstrated that at concentration of 1% or less, these solvents are relatively innocuous during the 3 h they are in contact with the cells. We have further demonstrated a lack of mutagenic potential by either acetone, DMSO or ethanol, at levels which might occur when used as compound solvents.

A major criticism of this assay to date is the lack of sufficient test data on "non-mutagens". Should a number of presumed "non-mutagens" produce positive responses in the TK assay, confidence in the validity of a positive mutagenic response by an unknown compound would be greatly diminished, i.e., a non sequitur dilemma. We therefore included 10 presumed non-mutagens or non-mutagenic stimuli in this validation study and found a lack of statistically

Questions? Contact FDA/CDRH/OCE/DID at CDRH-FOISTATUS@fda.hhs.gov or call 301-796-8118.

Records processed under FOIA Request #2015-1305; Released by CDRH on 05-11-2016.

significant mutagenicity in each case. We are confident on the basis of these limited but reproducible results that the incidence of false positives in this assay is acceptably low. Obviously, the classification of any chemical as a non-mutagen is largely based on the absence of substantial data to the contrary, a nebulous and conditional status subject to change as more data becomes available. Nevertheless, the TK assay apparently detects true mutagenic activity as opposed to epigenetic events such as selective toxicity.

The major goal of this study was to establish criteria for test interpretation, i.e., how is a positive mutagenic response to be scored? Except for certain potent mutagens such as ICR 170H, ICR 191G, 4NQO, EMS or MCA, the increase in mutants per plate in treated versus control cultures is seldom as striking as is the case for the Ames test. In all examples presented here, cytotoxicity ranging from temporary growth inhibition to overt lethality and lowered cell vigor as expressed by depressed cloning efficiencies limited the effective range of test-compound concentrations which could be used. Within this narrow range of concentrations (caffeine for example) cytotoxicity can rise dramatically. Thus, the experimenter is faced with the difficulty of detecting subtle increases in mutant numbers while maintaining sufficient cell viability to avoid the ambiguity imposed by extremely low viability. We have demonstrated that solvent control and combined experimental data (where cell survival ranges from 20 to 100%) can be compared via a 2-sample t-test to determine if significant differences exist between the control and treated sample populations.

While we have considered only raw mutant counts for a statistical analysis, we readily acknowledge that the totality of the response as indicated by consistently altered mutant frequencies cannot be ignored. Yet for some substances, mutant frequencies do occasionally fail to demonstrate reproducible, uniform, meaningful patterns compared to strong mutagens such as methyl methanesulfonate (1), *N*-nitrosodipropylamine (2), or EMS making conclusive interpretation difficult. Reasons for divergent results within or between experiments vary from experimental error to complex biological interactions.

The use of linear regression for data analysis has been suggested [12], but frequently we find the data fails to fit this model with an acceptable correlation coefficient ($r^2 \geqslant 0.90$) especially when a series of mutagen doses produces a wide range of survival values and regardless of whether mutant counts or mutant frequencies are used (see Table 4). In only 7 data sets (Table 4) could 90% or more of the variance be accounted for by simple regression. In general, we have found our data fits no standard function. In pooling the data as we have done, it is important that sequential doses be closely spaced, for example, in the ratio of $\sqrt[8]{10}$ [13] and cover the 20—100% survival range as closely as possible. Obviously, selection of more widely spaced doses or doses so small as to produce no observable biological activity would violate these conditions and render the analysis meaningless.

With some substances as, for example, lead acetate (our unpublished results), maximum solubility is achieved without appreciable cytotoxicity. In such cases, we can still proceed with the assay knowing that potent mutagens such as *N*-methyl-*N*-nitro-*N*-nitrosoguanidine, *N*-nitrosodipropylamine [2], or EMS might still be detected, even at survival $\simeq$100%. At the other end of the spectrum, some agents such as 9-aminoacridine, anthracene, DMSO (this paper), or

Questions? Contact FDA/CDRH/OCE/DID at CDRH-FOISTATUS@fda.hhs.gov or call 301-796-8118.

Records processed under FOIA Request #2015-1305; Released by CDRH on 05-11-2016.

hyperthermia (our unpublished results) may produce mutagenicity accompanied by moderate to considerable toxicity. These are more like quantal responses as opposed to the graded responses so characteristic of potent mutagens. We know, a posteriori, that at extreme exposure levels, untoward physiological factors such as pH change (hydrazine sulfate), hypertonicity (sucrose), enzyme denaturization (hyperthermia), or membrane delipidization (DMSO, ethanol, acetone, methanol) may influence survival or even mutant yields. Most importantly, the distinct possibility of trace mutagenic contaminants [16] becomes a serious problem at high dose levels.

Our statistical method utilizes 2 independent parameters, i.e. survival vs. mutant count, as opposed to other methods which use survival data vs. mutation frequencies derived from that same survival data. Our approach is most suited for the detection of agents which produce a graded increase in mutants with chemical concentration, but tends to reject as negative assays which produce (1) mid-range outliers, (2) abrupt increases in mutation frequencies at low survival, or (3) high variance within solvent controls. An example of the second category is the "nearly nonmutagenic" lucanthone analog, IA-3 (see ref. 7). Applications of the statistical criteria proposed by Clive and coworkers [12] to the present data would declare sodium phenobarbital a positive mutagen at 14% survival, yet anthracene and DMSO would also fall into that category based on singular data with survival at 14 and 16%, resp. We do not feel, however, that this single data point approach at low survival levels is sufficient evidence for mutagenicity, especially if based on one treatment sample and one control sample poured in triplicate. In general, we advocate the use of 2 control samples and 8 treatment samples, each poured quantitatively in triplicate, and the consideration in toto of all data before declaring a compound as mutagenic.

By employing the 2-sample *t*-test, we risk the possibility of masking real mutagenic responses by not including data where survival was <20%, (assuming chemical impurities are negligible), and fail to distinguish variance within treatments versus variance between treatments. On the other hand, we found that no simple functional form will express the relationship between chemical concentration or cell survival and mutagenic effect for these 30 diverse agents.

Of the 13 putative animal carcinogens tested, 3 were negative in the TK assay (auramine, hydrazine sulfate, sodium phenobarbital) compared to 3 (aniline, auramine and sodium phenobarbital) negative in the Ames test. 2 of these, sodium phenobarbital and auramine, have been described as non-mutagenic carcinogens [15] although there is no clear evidence that sodium phenobarbital is a human carcinogen [17] and, in fact, it may act as a tumor promoter rather than an ultimate carcinogen in rodents. Its status as a microsomal enzyme inducer makes it more likely to act as a potentiator of other promutagens than a mutagen in its own right. Hydrazine sulfate which has been regarded as a weakly mutagenic carcinogen [22] produced spurious increases in mutagenic activity when tested in the absence of S9. 2 compounds, 1,2-epoxybutane and ICR 191, which have been classified as non-carcinogenic mutagens (Ames-positive) [15], were also positive in the TK assay. While this sampling of 30 compounds or treatments is admittedly small compared to the data base available for some microbial tests, these data indicate that the TK assay can be expected to detect a large percentage of carcinogens as mutagens and is sensi-

Questions? Contact FDA/CDRH/OCE/DID at CDRH-FOISTATUS@fda.hhs.gov or call 301-796-8118.

Records processed under FOIA Request #2015-1305; Released by CDRH on 05-11-2016.

tive to some missed by the more established Ames system such as aniline.

In summary, the mouse-lymphoma $TK^{+/-} \rightarrow TK^{-/-}$ assay was found to provide a useful test for the detection of carcinogens as mutagens and offers many advantages over microbial or mammalian cell monolayer systems. In contrast to the more commonly used Ames tester strains, the mouse-lymphoma cell provides a mutagenesis indicator organism with multiple chromosomal DNA and known, intact DNA-repair capabilities [20]. Ames-tester strains TA1535, 1537, 1538, 98, and 100 purposely lack the uvrB excision-repair system [3,23], making them much more susceptible to sustained DNA damage than the parental strains. But mammalian cells in vivo can be assumed to possess some degree of DNA repair [21]. While the repair-deficient Ames *S. typhimurium* strains may possess an increased sensitivity toward certain mutagens which might cause primary DNA damage expressed as point mutations, the observed mutagenic activity may far exceed the actual damage produced by that agent in the more highly organized genome of a repair-capable mammalian cell. On the other hand, some phases of somatic cell division or mitosis may be particularly susceptible to the action of certain chemicals (spindle poisons for example) which would not necessarily affect *S. typhimurium*. The use of the TK locus allows a well-defined mutagenesis end-point without the limitations imposed by feeding artifacts, a possibility when nutritional markers are used, and less chance of loss of mutants through cross-feeding (metabolic cooperation) which can occur when mammalian cell monolayers are used [24]. We have demonstrated that overt cytotoxicity (growth inhibition) can be controlled, and that the statistical analyses of results can then be used for test interpretation. The use of acute exposure in suspension culture (3 h) to test compounds greatly reduces the possibility of mutant selection, i.e., a false increase in mutation frequency due to a selective survival of preexisting mutants. In addition, the use of suspension cultures with a low doubling time and the capacity to grow in soft agar permits shorter expression periods and eliminates interpretation problems which accompany low plating efficiencies, a problem with many mammalian cell lines grown as monolayers.

To date, we have tested with this assay 17 experimental chemicals of unknown carcinogenic potential. When the results were analyzed according to the criteria for mutagenicity described in this study, 3 of these were positive and 1 other compound showed mutagenic activity which was not statistically significant ($p > 0.05$). Of these 4, all were negative in microbial assays, but 2 were concomitantly positive in other short-term tests. 2 compounds uniquely positive in microbial tests and 2 compounds positive in only 1 other short-term test were negative in the mouse-lymphoma assay. Our experience thus indicates that occasional conflicts will occur between the Ames and mouse-lymphoma assay results. In those instances, we suggest special emphasis be attached to the mouse-lymphoma test result for phylogenetic reasons, especially when confirmed by at least one other mammalian cell assay in the test battery. These results demonstrate both the utility of the mouse-lymphoma assay for the assessment of mutagenic potential and the need for a comprehensive battery of short-term tests when evaluating novel chemical moieties for a potential so esoteric as human carcinogenic risk. And finally, it must be recognized that all in vitro assays for mutagenicity using isolated cells as the target organism are

Questions? Contact FDA/CDRH/OCE/DID at CDRH-FOISTATUS@fda.hhs.gov or call 301-796-8118.

Records processed under FOIA Request #2015-1305; Released by CDRH on 05-11-2016.

limited to the detection of mutagens or mutagenic metabolites which directly attack DNA and will not necessarily respond to substances whose mode of action involves physiological interaction of multiple factors at the tissue or organ level.

Acknowledgements

The authors are especially grateful to Drs. B. Bloom, H. Holden, C.L. Holmes, T.O. King, E.R. Pinson and M. von Schach for their suggestions and opinions during the preparation of this manuscript.

References

1 Amacher, D.E., S. Paillet and V.A. Ray, Point mutations at the thymidine kinase locus in L5178Y mouse lymphoma cells, I. Application to genetic toxicology testing, Mutation Res., 64 (1979) 391—406.
2 Amacher, D.E., S.C. Paillet and G.N. Turner, Utility of the mouse lymphoma L5178Y/TK assay for the detection of chemical mutagens, in: A.W. Hsie, J.P. O'Neill and V.K. McIlhenny (Eds.), Banbury Report 2 Mammalian Cell Mutagenesis: The Maturation of Test Systems, Cold Spring Harbor Laboratory, 1979, pp. 277—293.
3 Ames, B.N., F.D. Lee and W.E. Durston, An improved bacterial test system for the detection and classification of mutagens and carcinogens, Proc. Natl. Acad. Sci. (U.S.A.), 70 (1973) 782—786.
4 Ames, B.N., W.E. Durston, E. Yamasaki and F.D. Lee, Carcinogens are mutagens: A simple test combining liver homogenates for activations and bacteria for detection, Proc. Natl. Acad. Sci. (U.S.A.), 70 (1973) 2281—2285.
5 Andrews, A.W., L.H. Thibault and W. Lijinsky, The relationship between carcinogenicity and mutagenicity of some polynuclear hydrocarbons, Mutation Res., 51 (1978) 311—318.
6 Brown, M.M.M., and D. Clive, The utilization of trifluorothymidine as a selective agent for $TK^{-/-}$ mutants in L5178Y mouse lymphoma cells, Mutation Res., 53 (1977) 116.
7 Clive, D., Mutagenicity of thioxanthenes (hycanthone, lucanthone and four indazole derivatives) at the TK locus in cultured mammalian cells, Mutation Res., 26 (1974) 307—318.
8 Clive, D., Recent developments with the L5178Y TK-heterozygote mutagen assay system, Environ. Health Perspect., 6 (1973) 119—125.
9 Clive, D., W.G. Flamm and M.R. Machesko, Mutagenicity of hycanthone in mammalian cells, Mutation Res., 14 (1972) 262—264.
10 Clive, D., W.G. Flamm, M.R. Machesko and N.J. Bernheim, A mutational assay system using the thymidine kinase locus in mouse lymphoma cells, Mutation Res., 16 (1972) 77—87.
11 Clive, D., W.G. Flamm and J.B. Patterson, Specific locus mutational assay systems for mouse lymphoma cells, in: A. Hollaender (Ed.), Chemical Mutagens: Principles and Methods for their Detection, Vol. 3, Plenum, New York, 1973, pp. 79—103.
12 Clive, D., K.O. Johnson, J.F.S. Spector, A.G. Batson and M.M.M. Brown, Validation and characterization of the L5178Y/$TK^{+/-}$ mouse lymphoma mutagen/carcinogen assay system, Mutation Res., 59 (1979) 61—108.
13 Clive, D., and J.F.S. Spector, Laboratory procedure for assessing specific locus mutations at the TK locus in cultured L5178Y mouse lymphoma cells, Mutation Res., 31 (1975) 17—29.
14 Clive, D., and P. Voytek, Evidence for chemically-induced structural gene mutations at the thymidine kinase locus in cultured in L5178Y mouse lymphoma cells, Mutation Res., 44 (1977) 269—278.
15 de Serres, F.J., Mutagenicity of chemical carcinogens, Mutation Res., 41 (1976) 43—50.
16 Donahue, E.V., J. McCann and B.N. Ames, Detection of mutagenic impurities in carcinogens and noncarcinogens by high-pressure liquid chromatography and the Salmonella/microsome test, Cancer Res., 38 (1978) 431—438.
17 IARC Monographs on the Evaluation of Carcinogenic Risk of Chemicals to Man (1972—1978) IARC, Lyon, Vols. 1—17.
18 Jacobson, E.D., K. Krell, M.J. Dempsey, M.H. Lugo, O. Ellingson and C.W. Hench, Toxicity and mutagenicity of radiation from fluorescent lamps and a sunlamp in L5178Y mouse lymphoma cells, Mutation Res., 51 (1978) 61—75.
19 Kendall, M.G., and A. Stuart, The advanced theory of statistics, Vol. 1, Charles Griffin, London, 1963, p. 245.
20 Lehman, A.R., Postreplication repair of DNA in ultraviolet-irradiated mammalian cells, J. Mol. Biol., 66 (1972) 319—337.

Questions? Contact FDA/CDRH/OCE/DID at CDRH-FOISTATUS@fda.hhs.gov or call 301-796-8118.

Records processed under FOIA Request #2015-1305; Released by CDRH on 05-11-2016.

21 Lieberman, M.W., DNA repair as it relates to mutagenesis and gene expression in mammalian cells and tissues, in: W.G. Flamm and M.A. Mehlman (Eds.), Mutagenesis, Vol. 5, Wiley, New York, 1978, pp. 29—52.
22 McCann, J., E. Choi, E. Yamasaki and B.N. Ames, Detection of carcinogens as mutagens in the Salmonella/microsome test: Assay of 300 chemicals, Proc. Natl. Acad. Sci. (U.S.A.), 72 (1975) 5135—5139.
23 McCann, J., N.E. Springarn, J. Kobori and B.N. Ames, Detection of carcinogens as mutagens: Bacterial tester strains with R Factor plasmids, Proc. Natl. Acad. Sci. (U.S.A.), 72 (1975) 979—983.
24 Myhr, B.C., and J.A. DiPaolo, Requirement for cell dispersion prior to selection of induced azaguanine-resistant colonies of Chinese hamster cells, Genetics, 80 (1975) 157—169.
25 Poirier, L.A., and V.F. Simmon, Mutagenic—carcinogenic relationships and the role of mutagenic screening tests for carcinogenicity, Clin. Toxicol., 9 (1976) 761—771.
26 Scheffe, H., The Analysis of Variance, Wiley, New York, 1959, p. 345.
27 Weisburger, J.H., and G.M. Williams, Metabolism of chemical carcinogens, in: F.F. Becker (Ed.), Cancer, Vol. 1, Plenum, New York, 1975, pp. 185—234.

Questions? Contact FDA/CDRH/OCE/DID at CDRH-FOISTATUS@fda.hhs.gov or call 301-796-8118.

Records processed under FOIA Request #2015-1305; Released by CDRH on 05-11-2016.

ELSEVIER

Mutation Research 455 (2000) 97–110

Fundamental and Molecular Mechanisms of Mutagenesis

www.elsevier.com/locate/molmut
Community address: www.elsevier.com/locate/mutres

The Mouse Lymphoma Assay

Julie Clements*

Covance Laboratories Limited, Otley Road, Harrogate, North Yorkshire, HG3 1PY, UK

Abstract

In this paper, the current status of the protocol for the Mouse Lymphoma Assay is discussed. A brief history describes the events leading to current protocol recommendations. Areas for further development such as cytotoxicity, 24-h treatments, acceptability criteria and statistical analysis are also considered. Recent guidelines are reviewed, and consensus issues from the Mouse Lymphoma workgroup assembled as part of the International Workshop on Genotoxicity Test Procedures (IWGTP) are included. There are two versions of the assay — soft agar and microwell — and both will be discussed. For assay procedures, the emphasis will be on a typical microwell protocol but an attempt will be made to highlight protocol variations between laboratories and between the microwell and agar versions of the assay. © 2000 Elsevier Science B.V. All rights reserved.

Keywords: Mouse Lymphoma Assay; Microwell; Soft agar; Cytotoxicity; 24-h Treatments

1. Background

The Mouse Lymphoma Assay (MLA) has been widely used for many years to determine the genotoxic potential of a chemical. Much has been written about the assay, and it has often been the subject of controversy. However, with recent research into protocol optimisation and molecular analysis of the mutants, we are in a stronger position than ever before to understand the requirements for proper conduct of the MLA, along with its advantages and limitations.

1.1. History

Clive et al. [1] first described the assay cloning the cells in soft agar and subsequently investigated the optimal conduct of the assay [2]. During the early years, the assay developed a controversial reputation as a result of a number of problems, notably the role of agar quality, lack of reproducibility and testing to extremes of pH, osmolality and toxicity [3–5]. It was during this time that the protocol for the National Toxicology Program (NTP) was developed. Many protocol improvements were made to the soft agar version of the MLA in the 1980s but in order to overcome the problem of agar quality, particularly the effect on recovery of small colony mutants, Cole et al. [6,7] developed the microwell version of the assay growing the cells in liquid medium in 96-well plates. Thus, there are two versions of the assay, soft agar cloning and microwell (or Microtitre), and although it is the same assay there are some protocol differences to be considered, particularly when trying to compare data sets. The two methods often give similar results [5] but spontaneous and induced mutant frequencies do tend to be higher using microwell cloning [[8], Clements, unpublished observations].

1.2. Genetic basis of the assay

The cells used for the assay are mouse lymphoma cells (L5178Y $tk^{+/-}$ 3.7.2C), heterozygous at the

* Tel.: +44-1423-848406; fax: +44-1423-500803.
E-mail address: julie.clements@covance.com (J. Clements).

0027-5107/00/$ – see front matter © 2000 Elsevier Science B.V. All rights reserved.
PII: S0027-5107(00)00066-X

Questions? Contact FDA/CDRH/OCE/DID at CDRH-FOISTATUS@fda.hhs.gov or call 301-796-8118.

Records processed under FOIA Request #2015-1305; Released by CDRH on 05-11-2016.

thymidine kinase locus (*Tk1*) on chromosome 11. Inactivating the tk^{+} allele (this functional allele is also referred to as $Tk1^{b}$, on chromosome 11b) induces trifluorothymidine (TFT) resistance, and $tk^{-/-}$ mutants can be selected for in a background of $tk^{+/-}$ non-mutant cells. Mutant colonies have a bimodal size distribution, with so-called large colonies growing at the rate of $tk^{+/-}$ cells and small colonies growing at a slower rate [9]. Early cytogenetic studies demonstrated that small colony mutants are often associated with chromosome aberrations involving chromosome 11 whereas large colony mutants are often cytogenetically normal [9–11]. Both large and small colony mutants are represented in spontaneous and induced mutants, and the proportion of small colony mutants is mutagen dependent. Extensive molecular and cytogenetic analysis has shown that mouse lymphoma cells can detect a variety of mutations, including point mutations and small mutations within *Tk1*, losses of $Tk1^{b}$ (the functional allele), larger deletions including $Tk1^{b}$ and cytogenetically detectable chromosome aberrations such as translocations [12]. Most mutants, spontaneous or induced, have lost $Tk1^{b}$ and, notably, both large and small colony mutants may have lost the entire $Tk1^{b}$ allele [12]. Applegate et al. [13] and Clive et al. [14] reported that 70–75% of spontaneous mutants have lost $Tk1^{b}$ and the proportion of induced mutants that have lost $Tk1^{b}$ depends on the mutagen. Recent analysis [12] has utilised heteromorphic microsatellite loci on chromosome 11 to analyse $tk^{-/-}$ mutants for loss of heterozygosity (LOH), and elegantly combined this with whole chromosome painting to distinguish the mechanism of loss (deletion, non-disjunction or recombination/gene conversion). Liechty et al. [12] analysed 122 spontaneous mutants and found extensive loss of heterozygosity to be common in large and small colony mutants. In addition, a chromosome 11-specific painting probe was applied to 37 mutants for analysis of rearrangements. The chromosome paint revealed translocations and aneuploidy but indicated that non-disjunction was not a common explanation for LOH, at least for spontaneous mutants. Furthermore, large regions of LOH did not often result from deletions demonstrating that mouse lymphoma cells can detect recombination events in addition to chromosome rearrangements, deletions and point mutations. The $tk^{+/-}$ 3.7.2C mouse lymphoma cells have two mutant *Trp53* alleles and no wild type allele, and this may well contribute to their ability to detect the major types of mutational damage associated with the etiology of tumour development [15]. The cells have only one isoform of p53 protein and the allele has a mutation at codon 173 but it is possible that the protein may possess some normal function [15]. The MLA does seem sensitive to a wide range of genetic events, but it does not appear to be abnormally susceptible to false positive results [4].

1.3. Recent guideline developments

International regulatory agencies require chemicals to be evaluated for their ability to induce point mutation and chromosome aberrations. In the past, some regulatory agencies have recommended the MLA as the in vitro mammalian cell assay to evaluate both endpoints [16] whereas others have required the in vitro chromosome aberration assay. To facilitate the registration of pharmaceuticals, the International Conference on Harmonisation (ICH) was set up and two complementary guidelines on genotoxicity have been issued. These are ICH topic S2A *Genotoxicity: Guidance on Specific Aspects of Regulatory Genotoxicity Tests for Pharmaceuticals* [17] and ICH topic S2B *Genotoxicity: A Standard Battery for Genotoxicity Testing of Pharmaceuticals* [18]. A considerable amount of data was accumulated during the ICH process [19,20] and in the S2B document it states that the various in vitro tests for chromosome damage and the MLA test are considered interchangeable in the standard battery of tests, providing appropriate protocols are used. For a protocol to comply with ICH recommendations, a continuous treatment without metabolic activation for approximately 24 h is needed when negative results are obtained for the short treatment without metabolic activation. This is based upon the enhanced detection of a number of nucleoside analogues and base analogues when a 24-h treatment is included. Similarly, the detection of aneuploidy inducers was stated to be enhanced when using 24-h treatments in the microwell method of MLA but the experimental evidence for the detection of aneuploidy was noted to be limited.

As a result of this controversial ICH recommendation for 24-h treatments, and also a statement suggesting a preference for microwell over soft agar {recommendations not made previously in documents

Questions? Contact FDA/CDRH/OCE/DID at CDRH-FOISTATUS@fda.hhs.gov or call 301-796-8118.

Records processed under FOIA Request #2015-1305; Released by CDRH on 05-11-2016.

such as Organisation for Economic Co-operation and Development Guideline 476 (OECD, 1977) [21]}, a MLA workgroup was assembled as part of the International Workshop on Genotoxicity Test Procedures (IWGTP) held in Washington (1999). The workgroup reached consensus on a number of issues critical to the performance of the assay [22] and these will be highlighted appropriately in the sections below. In particular, the IWGTP workgroup discussions focussed on: (1) acceptable versions of the assay, (2) the appropriate toxicity measure, (3) the need for a 24-h treatment and (4) data acceptability and statistical analysis. Issues such as cells, positive controls, colony counting and sizing, and endorsement of current guidelines were also discussed.

The IWGTP workgroup considered the ICH statement suggesting a preference for the microwell over the soft agar version of the assay and concluded that there was insufficient data to recommend one version over the other and that both versions of the assay were equally acceptable [22]. It has already been acknowledged that the ICH recommendation was made based on limited comparative data at the time and that it may need re-evaluation through the ICH maintenance programme [23]. Both methods, soft agar and microwell, are currently acceptable to ICH. The author's laboratory has historically used the microwell version of MLA and has 10 years of experience with this method. Over the last few years the laboratory has also gained experience with the agar cloning version of the assay. In the assay procedures section, a typical microwell protocol will be illustrated in full but an attempt will be made to highlight protocol variations between laboratories and between the microwell and agar versions of the assay.

Relevant texts will be referenced as appropriate but the following papers provide key information on protocol design for the MLA: [5,17,18,21,24–29].

2. Materials

2.1. Cells

L5178Y $TK^{+/-}$ 3.7.2C mouse lymphoma cells should be used for the assay and available sources include Don Clive's stock (now at Glaxo Wellcome USA), Jane Cole's stock in the UK and the Japanese stock. It is recommended that karyotyping is performed when cryopreserving a master stock [22] and chromosome painting is also useful to confirm two normal chromosome 11s. In addition, checking population doubling times and that cells are mycoplasma free is recommended for master stocks. Vials of cells may be thawed for each experiment or if a working stock culture is maintained, it should not be kept longer than 3 months [22].

2.2. Negative and positive controls

Negative controls comprise treatments with the chosen solvent diluted to the same extent as the test article solutions. The solvents of choice are water (or saline), tissue culture medium, dimethyl sulphoxide (DMSO), acetone or dimethylformamide. Ideally a 10-fold dilution (aqueous solvent) or a 100-fold dilution (organic solvent) of a solution of the test article will be used. If other solvents or volumes of the organic solvents exceeding 1% (v/v) need to be used, the effects on viability and spontaneous mutant frequencies may need to be checked.

If the final concentration in the medium is equivalent to 10 mM, or the molecular weight is not known, then the osmolality of the medium should be measured, as fluctuations in osmolality of more than 50 mOsm/kg have been responsible for increased mutation [30,31]. Similarly, as extremes in pH should also be avoided, pH assessment of post-treatment medium may be made [30,31].

There are a number of examples of positive control chemicals. A typical positive control chemical, in the absence of metabolic activation, is 4-nitroquinoline1-oxide (NQO). The author's laboratory has many years experience of using NQO and one major advantage is that a stock solution of NQO can be prepared in anhydrous DMSO and if not used immediately, can be stored as frozen aliquots at $-80^{\circ}C$ in the dark. Typical NQO stock concentrations are 5 and 10 μg/ml in DMSO yielding final concentrations of 0.05 and 0.1 μg/ml (100-fold dilution) in the cultures for short (3 h) treatments. Final concentrations of 0.02 and 0.04 μg/ml NQO can be used for 24-h treatments. Methyl methane sulphonate (MMS) is a widely used positive control chemical in the absence of metabolic activation. However, there are some reservations over its use. It is volatile and

Questions? Contact FDA/CDRH/OCE/DID at CDRH-FOISTATUS@fda.hhs.gov or call 301-796-8118.

Records processed under FOIA Request #2015-1305; Released by CDRH on 05-11-2016.

it hydrolyses upon absorption of water so particular care is required during storage and preparation of solutions. From a practical point of view this means each solution must be prepared fresh prior to use on each occasion, necessitating use of larger amounts (compared to use of a stock solution) and having some safety implications. The IWGTP workgroup evaluated MMS data from a number of laboratories and found considerable unexplained variation in the data. Some batches of MMS are not as mutagenic as others. The IWGTP workgroup recommended further evaluation of MMS as a positive control chemical but did not suggest it should not be used [22].

OECD guideline 476 [21] includes benzo(*a*)pyrene, cyclophosphamide and 3-methylcholanthrene as examples of positive controls in the presence of metabolic activation and the IWGTP workgroup suggested adding dimethyl benzanthracene to this list [22]. The author's laboratory has many years of experience with benzo(*a*) pyrene, using stock solutions of 200 and 300 μg/ml in DMSO yielding final concentrations of 2 and 3 μg/ml in the cultures (100-fold dilution). Again frozen aliquots of the stock solutions may be stored at −80°C in the dark, a practical advantage.

Positive control responses should be used as quality control measures. In addition, to inducing a significant increase in mutant frequency, positive control chemicals should increase the absolute number of small colonies over that seen in the negative control [22].

2.3. Metabolic activation system

Performing the MLA in the presence of metabolic activation is a requirement and the OECD guideline 476 [21] suggests that the mammalian liver post-mitochondrial fraction (S9) is usually used at concentrations ranging from 1% to 10% in the final test medium. The IWGTP workgroup considered that this, along with enzyme inducers and cofactor mixes, could have been discussed in great detail but as these issues are relevant to all in vitro assays, it was recommended that this be addressed in a broader forum.

A typical example of a metabolic activation system is quoted here. The S-9 can be obtained commercially (in the author's laboratory, it is obtained from Molecular Toxicology, Boone, NC, USA) where it is prepared from male Sprague–Dawley rats induced with Aroclor 1254. The batches of S-9 are stored frozen at −80°C prior to use. Each batch is checked by the manufacturer for sterility, protein content, ability to convert known promutagens to bacterial mutagens and cytochrome *P*-450-catalyzed enzyme activities.

Short treatments (3 h) can be carried out in the presence of S-9, as indicated below.

Glucose-6-phosphate (180 mg/ml), NADP (25 mg/ml), 150 mM KCl and rat liver S-9 are mixed in the ratio 1:1:1:2. For all cultures treated in the presence of S-9, a 1-ml aliquot of the mix will be added to each cell culture (19 ml) to give a total of 20 ml. The final concentration of the liver homogenate in the test system is 2%. Cultures treated in the absence of S-9 receive 1 ml, 150 mM KCl (3-h treatment only).

2.4. Growth media and conditions

The MLA can be performed using Fischer's medium or RPMI 1640 (illustrated here), containing horse serum (typically 10% for suspension growth and 20% for cloning but this varies between laboratories). The stringency of mutant selection can be adversely affected by inadequate heat-inactivation of horse serum (particularly when using RPMI 1640), so each laboratory should demonstrate the stringency of selection [4]. Batches of serum should be tested to check effects on cell growth, cloning efficiency and spontaneous and induced mutant frequencies [24].

2.5. Consumables and equipment

There are many suppliers of sterile tissue culture plasticware but it is always advisable to fully check that the product fulfils your needs before purchase. There is often a reluctance among cell culture experts to change suppliers if things are working well and this results from experiences with leaking flasks, problems with evaporation from 96-well plates and so on.

Consumable items include: 75-cm tissue culture flasks, 96-well plates or petri dishes, centrifuge tubes, Universals, Coulter pots.

Equipment includes: bottle top dispensers, automatic pipettes, electronic multichannel pipettes (a real

Questions? Contact FDA/CDRH/OCE/DID at CDRH-FOISTATUS@fda.hhs.gov or call 301-796-8118.

Records processed under FOIA Request #2015-1305; Released by CDRH on 05-11-2016.

advantage for the microwell MLA), Coulter counter and haemocytometer, facilities for handling and incubating cell cultures, PC and software for calculating cell culture dilutions and for data analysis.

3. Assay procedures

3.1. Definition of maximum treatment concentration

Following preliminary solubility assessments, a solvent is chosen and dilution series calculated to allow maximum exposure up to the solubility limit or 10 mM whichever is lower. For freely soluble test articles, where the molecular weight is unknown, testing does not normally proceed above 5000 μg/ml.

A preliminary range finding cytotoxicity experiment is normally performed in order to establish an appropriate concentration range for the mutation experiments. It is advisable to perform the range finding experiment both in the absence and presence of metabolic activation, as toxicity is often observed at different concentrations under these two test conditions. Furthermore, if a 24 h continuous treatment is required, a 24-h treatment cytotoxicity range finder experiment is also necessary. Experimental design of range finding experiments varies between laboratories, and to suit the circumstances. The mouse lymphoma cells grow in suspension culture and heavy precipitates can interfere with the assay. At the end of the treatment incubation, the cells are pelleted by centrifugation and the precipitate may pellet with the cells making the control of exposure impossible. Thus, normally the lowest precipitating concentration will be the highest dose tested [17].

3.2. Dose range finding assay

A typical range finder experiment is described here. Normally, at least six doses (typically 8 or 10) will be used, separated by two-fold intervals ranging down from the solubility limit, 10 mM or 5000 μg/ml.

Treatment of the cell cultures is as described below for the mutation experiments. However, single cultures only are used for the range finder and positive controls are not included. Following treatment, cells are washed and resuspended in 20-ml tissue culture medium. Cell concentrations are adjusted to 8 cells/ml and, for each dose, 0.2 ml is dispensed into each well of a 96-well microtitre plate. The plates are incubated at 37°C±1°C in a humidified incubator gassed with 5% (v/v) CO_2 in air for a minimum of 3 days. Wells containing viable clones are identified, either under a microscope or by eye, and counted. Thus, for the microwell method, toxicity is often measured by assessment of the relative plating efficiency (% relative survival) immediately after treatment.

When using the agar cloning version of the MLA, the treatment phase of the assay is identical. However, the measure of toxicity can vary. Following treatment in the cytotoxicity range-finding assay, cells are often incubated overnight and a cell count is taken the next day. The reduction in cell growth relative to the current control growth is calculated.

When the toxic range has been determined, a minimum of five doses (typically 6–8) will usually be selected for the first mutation experiment, ranging from non-toxic to toxic (approximately 10–20% relative survival) where possible. However, as many as 10 or 12 doses may be required for a test chemical showing a steep toxicity curve. Concentration spacing often needs to be closer than that obtained with a 2-fold dilution series, and a dilution factor where each concentration is 0.75 or 0.8 of the one above is often required when testing toxic chemicals [32]. Normally, a minimum of four doses will be carried through all stages of the assay.

3.3. Mutation assay

3.3.1. Treatment of cell cultures

It is critical that the number of cells treated, subcultured and plated is sufficient (taking account of both toxicity and the spontaneous mutant frequency) in order to be able to demonstrate a significant increase in mutant frequency over the control mean [24]. It has been proposed that each treated population should contain sufficient cells that at least 100 mutants will be present at the end of treatment [25].

For 3-h treatment incubations using the microwell assay, typically 1×10^7 cells (exponentially growing) are placed in each of a series of sterile disposable 50-ml centrifuge tubes. It is recommended that the treatment medium for the 3-h treatments contains a reduced serum level of 5% (v/v) because the presence of serum can inhibit the action of some mutagens. To

Questions? Contact FDA/CDRH/OCE/DID at CDRH-FOISTATUS@fda.hhs.gov or call 301-796-8118.

Records processed under FOIA Request #2015-1305; Released by CDRH on 05-11-2016.

achieve this cells may be pelleted by centrifugation, the culture medium removed and the cells resuspended in a final volume of treatment medium containing 5% (v/v) horse serum. A suitable volume of solvent, test compound or positive control solution is added and 1.0 ml S-9 mix or 150 mM KCl such that each tube is at a final volume of 20 ml in the absence or presence of S-9 (3-h treatment). Solubility of the test article in the cultures is assessed, by the naked eye, at the beginning and end of treatment.

For the 24-h treatment incubations, numbers of cells ranging from 3×10^6 to 1×10^7 have typically been chosen, mostly in 20 ml treatment volumes (50 ml at the higher end of the range) and using 10% (v/v) horse serum (some laboratories using 5%). Treatments are performed in a series of sterile disposable tissue culture flasks.

After a 3-h rocking at 37±1°C, or 24-h incubation at 37±1°C, cultures are centrifuged at $200\times g$ for 5 min, the cells washed with tissue culture medium and resuspended further in 20 ml RPMI medium containing 10% serum. Cell densities are determined using a Coulter counter or haemocytometer and, where sufficient cells survive, the concentration adjusted to 2×10^5/ml. Cells are transferred to flasks for growth through the expression period or diluted to be plated for survival. For the microwell method, cultures are in duplicate (single cultures may be used for each dose of the positive control when two or more doses are selected).

For the soft agar version of the assay, typically 6×10^6 cells are seeded into tubes in a final volume of 10-ml treatment medium for 3-h treatments and 20 ml for 24-h treatments. After treatment, the medium is removed by centrifugation and the cells washed and resuspended in 20 ml of culture medium. Six or more dose levels of the test article may be used but usually with one culture per dose level. Determination of % relative survival is not usually performed for the soft agar version of the assay. Whether using the microwell or soft agar MLA, it is widely agreed that cells should be counted at the end of a 24-h treatment [22].

3.3.2. Plating for survival (microwell method)

Following adjustment of the cultures to 2×10^5 cells/ml after treatment, samples are diluted to 8 cells/ml. Using a multichannel pipette, 0.2 ml of the final concentration of each culture is placed into each well of two 96-well microtitre plates (192 wells, averaging 1.6 cells per well). The plates are incubated at 37±1°C in a humidified incubator gassed with 5% (v/v) CO_2 in air for 1 to 2 weeks. Wells containing viable clones are identified by eye using background illumination and counted.

3.3.3. Expression period

In any mutation system, the time after treatment when the maximum frequency of induced mutants can be detected will depend on the cell line, the selective system and the incubation conditions [24]. It is therefore advisable for each laboratory to define the optimal expression period using several reference mutagens. Usually 2 days is adopted for MLA. Occasionally longer expression times (3 days) have been used to enable cells to recover from the toxic effects of a high dose treatment but one concern is the potential for loss of small colonies with longer expression times. Thus, cultures are maintained in flasks for a total of 2 days during which time the TK^- mutation will be expressed. During the expression period, subculturing must be performed as required with the aim of not exceeding 1×10^6 cells/ml and, where possible, retaining sufficient cells per flask (a total of at least 1×10^7 cells/flask often used for 3-h treatments). Cell densities are determined on Day 1 and, where possible, each culture adjusted to 2×10^5 cells/ml (3×10^5 cells/ml commonly used also). From observations on recovery and growth of the cultures during the expression period, normally at least four test dose levels plus negative and positive controls are selected to be plated for viability and 5-trifluorothymidine (TFT) resistance.

3.3.4. Plating for viability

At the end of the expression period in the microwell method, the cell densities in the selected cultures are determined using a Coulter counter or haemocytometer and adjusted to 1×10^4/ml with RPMI (20% serum) in readiness for plating for TFT resistance.

Samples from these are diluted to 8 cells/ml. Using a multichannel pipette, 0.2 ml of the final concentration of each culture is placed into each well of two 96-well microtitre plates (192 wells, averaging 1.6 cells per well). The plates are incubated at 37±1°C in a humidified incubator gassed with 5% (v/v) CO_2 in

Questions? Contact FDA/CDRH/OCE/DID at CDRH-FOISTATUS@fda.hhs.gov or call 301-796-8118.

Records processed under FOIA Request #2015-1305; Released by CDRH on 05-11-2016.

air for 1 to 2 weeks. Wells containing viable clones are identified by eye using background illumination and counted.

For the soft agar version of the assay, cloning efficiency is normally determined by seeding three dishes with a total of approximately 600 cells in agar cloning medium (RPMI 1640 medium, 20% horse serum and typically ~0.24% agar to achieve a semi-solid state). The dishes are incubated for 10–14 days as above and the colonies counted.

3.3.5. Plating for 5-trifluorothymidine (TFT) resistance

The concentration of selective agent should be high enough to kill all the non-mutant cells and each laboratory should check this for themselves. Trifluorothymidine is light sensitive and has a short half-life in medium at 37°C so care must be taken [24].

For the microwell method, cell concentrations are adjusted to give typically 1×10^4/ml at the end of the expression period, TFT (300 μg/ml) is diluted 100-fold into these suspensions to give a final concentration of 3 μg/ml. Using a multichannel pipette, 0.2 ml of each suspension is placed into each well of four 96-well microtitre plates (384 wells at 2×10^3 cells per well). Plates are incubated at 37±1°C in a humidified incubator gassed with 5% (v/v) CO_2 in air for 11–12 days and wells containing clones are identified as above and counted.

For the soft agar version of the assay, typically a total of 3×10^6 cells from each treated culture are suspended in selection medium (with 3 μg/ml TFT) in soft agar to recover TFT-resistant mutants. The cells are distributed into three 100-mm dishes.

3.3.6. Colony sizing

The IWGTP workgroup agreed with the OECD recommendation that sizing of colonies should be performed in the negative and positive controls (as a quality control) and at least at the highest positive concentration of the test chemical. In the microwell assay, small colonies are defined as less than a quarter of the diameter of the well. Size is the key factor and morphology should be secondary. Scoring by low power microscope or eye is acceptable. For the determination of small and large colony mutants to be the same in microwell and soft agar, the mutant frequencies (not colony numbers) should be reported. This necessitates scoring empty wells for small and large colonies separately for the microwell version.

The molecular basis of small and large colony mutants is not fully understood. One hypothesis involves a putative growth control gene, predicted to be distal but very close to *Tk1* [12]. An alternative model focuses on chromosome breakage, suggesting a cell may suffer growth arrest until the cell repairs the damage [12]. Thus, a colony would be small because cell division was interrupted for a while. It is true that cytogenetically detectable chromosome aberrations are more frequent in small rather than large colony mutants [9–11]. Furthermore, some mutants with chromosome aberrations do revert to a normal karyotype in time but remain $tk^{-/-}$ and some small colony mutants do re-acquire a normal growth phenotype in time, while remaining $tk^{-/-}$ [12]. A third model invokes mutations at a completely separate locus, probably not on chromosome 11. These models are not necessarily mutually exclusive. However, they do suggest that colony size cannot necessarily be used to predict whether a chemical is a point mutagen or a clastogen.

3.4. Protocol variations

3.4.1. Agar and microwell

- Stationary culture or shaking culture (e.g. orbital shaker at 80±10 orbits/min) are equally acceptable.
- A treatment period of 3 or 4 h is commonly used for the short treatments.

3.4.2. Microwell

- Numbers of cells plated per well varies between 1 and 2 (1.6 is optimum, given 100% cloning efficiency).
- Quadruplicate rather than duplicate cultures sometimes used in controls.
- One rather than two survival or viability plates sometimes used per culture.
- Two rather than four selection plates sometimes used per culture.

3.5. Critical practical aspects

The following key points might be considered when evaluating data:

- Are cells growing well (doubling time typically 10 h)?

Questions? Contact FDA/CDRH/OCE/DID at CDRH-FOISTATUS@fda.hhs.gov or call 301-796-8118.

Records processed under FOIA Request #2015-1305; Released by CDRH on 05-11-2016.

- Are plating efficiencies acceptable (see acceptance criteria)?
- Single cell suspensions required at all stages of the assay (high plating efficiencies on Day 2 indicate problems here or potential delays between counting and plating).
- Are negative and positive control mutant frequencies acceptable?
- Is there adequate demonstration of small colony recovery in negative and positive controls?
- Are there sufficient doses to achieve required toxicity?
- Are levels of variability/heterogeneity acceptable?

3.6. Confirmatory experiments

Depending on the results of the first experiment a second experiment may be performed. Clearly positive results do not require verification [18,21]. If the results of Experiment 1 in the absence of S-9 are clearly negative, Experiment 2 in the absence of S-9 may be tested using an extended treatment incubation period (24 h) [18]. If a 24-h treatment incubation period is required for Experiment 2 (for example, the chemical under test is a pharmaceutical), doses will be selected based on the results of a 24-h treatment cytotoxicity range finder.

Negative results in the absence of S-9 need confirmation on a case-by-case basis [18,21] but where confirmation is not considered necessary, justification should be provided [21]. Equivocal results should be clarified by further testing, and experimental conditions should be modified appropriately (for example, concentration spacing or metabolic activation conditions).

4. Data analysis and interpretation

The *biological relevance* of the result is the most critical issue but statistical analysis can aid data interpretation.

4.1. Microwell method

The microwell version of the assay is a fluctuation test and the key parameter for analysis is the number of negative wells on each 96-well plate. The necessary protocol design and statistical analysis of data from the microwell version of the MLA has been considered in detail and our laboratory has followed the recommendations of the UKEMS guidelines [25]. Although, it appears complex at a first glance, all calculations of mutant frequencies and statistical analysis can be performed by commercially available software (York Electronic Research).

Two sources of variation were identified in experiments [24], variation in the number of cells distributed between plates from a single culture and variation between replicate cultures undergoing the same treatment in the same experiment. This second source of variation is likely to be the larger of the two and because subculturing introduces variation that cannot be estimated from a single culture, it has always been strongly recommended that treated and control cultures are duplicated [24].

4.1.1. Determination of survival or viability

From the zero term of the Poisson distribution the probable number of clones/well (P) on microtitre plates in which there are EW empty wells (without clones) out of a total of TW wells is given by:

$$P = -\ln(\mathrm{EW}/\mathrm{TW})$$

The plating efficiency (PE) in any given culture is therefore:

$$\mathrm{PE} = P/\text{No. of cells plated per well}$$

and as an average of 1.6 cells per well are plated on all survival and viability plates,

$$\mathrm{PE} = P/1.6$$

The percentage relative survival (%RS) in each test culture can therefore be determined by comparing plating efficiencies in test and control cultures thus:

$$\%\mathrm{RS} = [\mathrm{PE}_{(\mathrm{test})}/\mathrm{PE}_{(\mathrm{control})}]100$$

To take into account any loss of cells during the 3-h treatment period, percentage relative survival

Questions? Contact FDA/CDRH/OCE/DID at CDRH-FOISTATUS@fda.hhs.gov or call 301-796-8118.

Records processed under FOIA Request #2015-1305; Released by CDRH on 05-11-2016.

values for each dose of test article are adjusted as follows:

$$\text{Adjusted \%RS} = \text{\%RS} \times \frac{\text{Post-treatment cell concentration for dose}}{\text{Post-treatment cell concentration for solvent control}}$$

All percentage relative survival (%RS) values are adjusted as described above.

Relative Total Growth (RTG) is also calculated and this is the product of the cumulative relative suspension growth (compared with the control), RSG, and the relative plating efficiency for each culture:

$$\text{RTG} = \text{RSG} \times \text{Day 2 relative PE}/100$$

Where,

$$\text{Suspension growth (SG)} = [\text{Day 1 cell count}/2 \times 10^{5*}] \times [\text{Day 2 cell count}/2 \times 10^{5*}],$$

where * is the appropriate cell concentration if lower

$$\text{Relative Suspension Growth (RSG)} = \text{SG}_{(\text{test})}/\text{SG}_{(\text{control})}$$

$$\text{Day 2 relative PE} = \text{Day 2 PE}_{(\text{test})}/\text{Day 2 PE}_{(\text{control})}$$

It is likely that this RTG calculation will change in the near future, to take account of loss of cells during treatment (see Section 5.1).

4.1.2. Determination of mutant frequency

It is usual to express mutant frequency (MF) as "mutants per 10^6 viable cells". In order to calculate this, the plating efficiencies of both mutant and viable cells in the same culture are calculated:

$$\text{MF} = [\text{PE}_{(\text{mutant})}/\text{PE}_{(\text{viable})}] \times 10^6$$

From the formulae given and with the knowledge that 2×10^3 cells are plated/well for mutation to 5-trifluorothymidine resistance,

$$\text{PE}_{(\text{viable})} = P_{(\text{viable})}/1.6$$

Where, in each case, $P = -\ln(\text{EW/TW})$

$$\text{PE}_{(\text{mutant})} = P_{(\text{mutant})}/2 \times 10^3$$

Therefore,

$$\text{MF} = [P_{(\text{mutant})}/2 \times 10^3] \times [1.6/P_{(\text{viable})}] \times 10^6 = \{-\ln[\text{EW/TW}_{(\text{mutant})}]/-\ln[\text{EW/TW}_{(\text{viable})}]\} \times 800$$

Small and large colony mutant frequencies are calculated in an identical manner, using the relevant number of empty wells for small and large colonies as appropriate.

4.1.3. Assessment of statistical significance of mutant frequency

Statistical significance of mutant frequencies (total wells with clones) can be carried out according to the UKEMS guidelines [25]. The control log mutant frequency (LMF) is compared with the LMF from each treatment dose based on Dunnett's test for multiple comparisons, and secondly the data are checked for a linear trend in mutant frequency with treatment dose using weighted regression. The test for linear trend is one-tailed, therefore, negative trend is not considered significant. These tests require the calculation of the heterogeneity factor to obtain a modified estimate of variance.

4.1.4. Acceptance criteria

The assay is considered valid if all the following criteria are met (the criteria specified here are based largely on UKEMS guidelines [25] and the Portland Workshop [26]):

1. The mutant frequencies in the negative (solvent) control cultures fall within the normal range (above 60 mutants per 10^6 viable cells but not more than three times the historical mean value) [25,26].
2. At least one concentration of each of the positive control chemicals induces a clear increase in mutant frequency (the difference between the positive and negative control mutant frequencies is greater than half the historical mean value) [25]. Alternatively, a fold increase may be specified.
3. The plating efficiencies of the negative controls from the mutation experiments are between the

Questions? Contact FDA/CDRH/OCE/DID at CDRH-FOISTATUS@fda.hhs.gov or call 301-796-8118.

Records processed under FOIA Request #2015-1305; Released by CDRH on 05-11-2016.

range of 60% and 140% on Day 0, 70% and 130% on Day 2 [26].

4.1.5. Evaluation criteria

The test article is considered to be mutagenic in this assay if all the following criteria are met:

1. the assay is valid,
2. the mutant frequency at one or more doses is significantly greater than that of the negative control ($p<0.05$),
3. there is a significant dose-relationship as indicated by the linear trend analysis ($p<0.05$).

Results, which only partially satisfy the above criteria, are dealt with on a case-by-case basis. Similarly, positive responses seen only at high levels of cytotoxicity will require careful interpretation when assessing their biological significance. Extreme caution should be exercised with positive results obtained at levels of survival lower than 10%.

4.2. Soft agar method

Similarly, when using agar cloning, it is usual to express mutant frequency (MF) as "mutants per 10^6 viable cells" (sometimes per 10^5 viable cells). In order to calculate this, the plating efficiencies of both mutant and viable cells in the same culture are calculated:

$$\mathrm{MF} = [\mathrm{PE}_{(\mathrm{mutant})}/\mathrm{PE}_{(\mathrm{viable})}] \times 10^6$$

From the formulae given above and with the knowledge that 3×10^6 cells are plated per dose for assessment of mutation to 5-trifluorothymidine resistance, and that 600 cells per dose are plated for assessment of viability:

$$\mathrm{PE}_{(\mathrm{mutant})} = \text{No. of colonies on selective (TFT) plates per dose}/3 \times 10^6$$

$$\mathrm{PE}_{(\mathrm{viable})} = \text{No. of colonies on viability plates per dose}/600$$

If one dish in any culture set is lost due to contamination, or other cause, the colony count can be determined by proportion, based on the weights of the three dishes of the set. The ratio of small and large colony mutants are calculated, for each dose, using the relevant number of small and large colonies scored, as appropriate. Colony sizing can be performed by eye or by an automated colony counter. The former is accurate ensuring no small colonies are missed but categorising colonies as either small or large can be somewhat subjective. Automated colony counters are now much improved and enable size distributions to be generated but there is a danger that small colonies are missed.

Acceptance and evaluation criteria were defined at the Portland and Victoria workshops [26,27]. In general, statistical analysis has not played a major role in evaluation of data from the agar version of the MLA. The tendency has been to apply the two-fold rule (a two-fold increase in mutant frequency over negative control at more than one dose level constitutes a positive response) and evaluate the data for dose dependent effects (assessed by review of the data and not by statistical analysis) [4].

The IWGTP workgroup accepted the assay criteria (soft agar and microwell) defined at Portland [26] and Victoria [27] as a minimum but there were concerns that the acceptance criteria were too lenient. It was recognised that it is necessary to identify sources of variability in the assay and ways to reduce them. Valid acceptance criteria for cell growth, cytotoxicity, plating efficiencies, spontaneous and positive control mutant frequencies and % small colonies in negative and positive controls can then be defined. Similarly, there is a need to compare the statistical approaches in use to evaluate MLA data and develop guidance in this area. The IWGTP workgroup agreed to develop a strategy to evaluate currently available data and formulate future recommendations on acceptability criteria, analysis of variation and appropriate approaches to statistical analysis.

5. Development of further recommendations

5.1. Cytotoxicity

The measure of cytotoxicity is critical in any in vitro genotoxicity assay because, for toxic chemicals, cytotoxicity ultimately determines the top dose selected for testing. Some background to the methods used to determine cytotoxicity in the microwell and soft agar versions of the MLA will be useful in order to understand the different measures used. Historically, in the soft agar version of the assay (short treatment), the

Questions? Contact FDA/CDRH/OCE/DID at CDRH-FOISTATUS@fda.hhs.gov or call 301-796-8118.

Records processed under FOIA Request #2015-1305; Released by CDRH on 05-11-2016.

measure of cytotoxicity has been the relative suspension growth of cells over the 2-day expression period multiplied by the relative cloning efficiency at the time of selection. This parameter, relative total growth or RTG, is not strictly a measure of cell survival but it does encompass loss of cells during treatment and subsequent effects on cell growth and cloning efficiency following treatment. In contrast, the microwell version of the MLA has historically determined relative survival (the % relative cloning efficiency or %RS) immediately at the end of treatment. In view of the fact that ideally the number of cells per well being plated to determine RS should be in the region of 1.6, many laboratories count cells at the end of treatment and plate out accordingly. However, counting at the end of treatment led to the revelation that many chemicals have a profound effect on the number of cells present even during a short 3-h treatment incubation period. Discussion of this topic by a number of users of the microwell MLA led to the conclusion that the calculation for %RS should take into account the loss of cells during treatment. Many of these discussions took place at around the time of the Portland workshop, where it was recommended that RTG should be reported. RTG is a parameter that can be generated for the microwell version of the assay. However, since %RS is calculated immediately post-treatment and the cells are counted at this stage, the RTG calculation for several labs has consisted of suspension growth following treatment multiplied by the relative cloning efficiency at the time of selection. Indeed many of the microwell users agreed at the time that the loss of cells during treatment should not be applied to the RTG calculation. Hopefully, this explains the subtle differences in the toxicity measures between the soft agar and microwell versions of the MLA. RTG for soft agar cloning (and incidentally some microwell users) encompasses the time from the start of treatment to the end of expression time, whereas laboratories performing microwell cloning have traditionally determined %RS immediately after treatment and RTG has included suspension growth from the end of treatment to the end of the expression time. Both %RS and RTG are acceptable measures of toxicity but they do measure different things. In the majority of cases, little difference is seen between the two measures but there are occasions where significant differences occur. The IWGTP workgroup discussed cytotoxicity and agreed that a single measure should be used for the agar and microwell versions of the MLA. However, it was agreed that there was not enough comparative cytotoxicity data to conclusively determine the best measure. The workgroup committed to collecting data for further analysis with the aim of reaching a consensus on a standard cytotoxicity measure, to include the recommended calculations. It is the intention to identify circumstances under which alternative or multiple measures of cytotoxicity might be appropriate. The process of data collection is currently underway and the workgroup meet again in April 2000. In the interim, the workgroup agreed that RTG should be used as a measure for cytotoxicity for the purpose of defining acceptable top concentrations [22]. The IWGTP workgroup also considered that further discussion and consensus was required on the need to attain approximately 80–90% toxicity in each experiment to define a negative.

5.2. The requirement for 24-h treatment

Following trials to evaluate the MLA as an alternative to the in vitro chromosomal aberration test, Honma et al. [19] concluded that the MLA was not as sensitive but that extending the duration of treatment may make the MLA more effective for detection of clastogens and spindle poisons. In a further study, Honma et al. [20] evaluated 15 chemicals, evaluated as negative or inconclusive in short treatments, and 11 chemicals yielded positive responses following 24-h treatment MLA. The chemicals included nucleoside analogues, a base analogue and spindle poisons (colchicine and vinblastine sulphate). The IWGTP workgroup discussed the requirement for the 24-h treatment and the majority, but not all, endorsed the ICH recommendation that chemicals found to be negative with 3–4-h treatment be tested in a confirmatory trial for 24 h (without metabolic activation). A significant amount of data has now been generated using 24-h treatments and the IWGTP workgroup agreed that the issue should be further evaluated prior to the workshop in April 2000. Further information is also required on a number of protocol issues prior to making final recommendations for 24-h treatments (including expression time, cell density and calculation of cytotoxicity). Indeed, consideration of the 24-h treatments adds a further dimension to the cyto-

Questions? Contact FDA/CDRH/OCE/DID at CDRH-FOISTATUS@fda.hhs.gov or call 301-796-8118.

Records processed under FOIA Request #2015-1305; Released by CDRH on 05-11-2016.

toxicity discussions above. For 24-h treatments, most laboratories seem to agree that counting is required at the end of treatment and that the 24-h treatment period must be taken into account when calculating RTG. It would seem logical to apply the same arguments to the 3–4-h treatments.

Many MLA users are convinced of the value of using a 24-h treatment to detect cell cycle specific clastogens or to enhance detection of an effect when solubility is poor or toxicity limits have not been achieved in short treatments. However, the ability of the MLA to detect aneugens is not so clear and more data are needed. There are reports of positive results for colchicine and vinblastine at considerable cytotoxic concentrations [20,33] but other laboratories have not succeeded in obtaining positive results for these spindle poisons [34–36]. The spindle poisons have extremely steep toxicity curves and, potentially, protocol differences in calculating toxicity, and therefore acceptable top dose, may account for the different results. Carbendazim clearly induces non-disjunction in human lymphocytes [37] but seems to be only very weakly positive in the MLA. It is interesting to consider the molecular analysis of mutants when considering likely mechanisms leading to the induction of mutants. For example, Honma et al. [33] have reported significant LOH and numerical changes in chromosome 11, as expected if the colchicine and vinblastine induced mutants arise by non-disjunction, but also intermediate copy number for the *tk* gene in the mutants indicating complex genetic events. Liechty et al. [12] found that 23 of 86 spontaneous mutants that had lost heterozygosity, lost alleles at all the microsatellites tested. These results could be explained by whole chromosome loss through non-disjunction, deletion of a large part of the chromosome or by mitotic recombination. Whole chromosome painting can distinguish non-disjunction as a mechanism because of the centromeric heteromorphism in chromosome 11. A mutant arising from non-disjunction would have only chromosome 11a, or two copies of 11a if the remaining chromosome was reduplicated, and the centromeres would be identical in size. Four such mutants, one small colony and three large, were painted. One large colony mutant had two copies of 11a and no 11b, clearly arising by non-disjunction, but the other three mutants had both 11a and 11b centromeres, suggesting a mechanism other than non-disjunction for their origin. The large colony mutant was also missing a small part of chromosome 11 but apart from this one example, mutants containing less than two chromosome 11 equivalents were not observed suggesting that mutants lacking one chromosome 11 are not viable. There has been a report of a cell line containing only one chromosome 11 but painting of this line indicates fragments of chromosome 11 distributed throughout the genome [12]. Furthermore, Eckert et al. [38] have treated mouse lymphoma cells with aneugens, and although micronuclei containing predominantly whole chromosomes were induced, they did not induce mutations at Tk1, the selectable gene. They applied a chromosome 11 paint to micronuclei induced by colcemid and vinblastine to determine that the frequency of induction of micronuclei containing chromosome 11 was sufficient to be detectable as mutations if micronuclei lead to viable mutants. The conclusion was that the formation of micronuclei containing whole chromosomes does not lead to viable mutants in this system. Thus, it may be likely that if the MLA is capable of detecting aneuploidy, it is via very complex mechanisms and thus the sensitivity of the system regarding this end-point may be low. Further data and molecular analysis of mutants will no doubt shed light on this issue.

6. Conclusions

The current status of the MLA protocol has been discussed, including topics such as cytotoxicity, the requirement for the 24-h treatment and the need for further guidance on data acceptability criteria, variability and statistical analysis.

The MLA is clearly capable of detecting gene mutation, chromosomal damage and recombination induced by a wide range of chemicals. Although chromosome aberration tests and the MLA both detect chromosome damage, they are not exact equivalents and chemicals can have different relative potencies in the two tests. The MLA detects a wider range of genetic damage than can be visualised by chromosome aberration analysis and also detects damage in viable cells capable of forming colonies. This is considered an advantage of the MLA, particularly when using a well-conducted assay as part of a test battery to provide information on hazard identification.

Questions? Contact FDA/CDRH/OCE/DID at CDRH-FOISTATUS@fda.hhs.gov or call 301-796-8118.

Records processed under FOIA Request #2015-1305; Released by CDRH on 05-11-2016.

Acknowledgements

I would like to thank members of my laboratory for their help and support. I am also grateful for discussions with my colleagues, particularly Mick Fellows in my group, and members of the UK MLA Users group, and the IWGTP workgroup. Thanks also to Wendy Burgess for help in preparation of this manuscript.

References

[1] D. Clive, W.G. Flamm, M.R. Machesko, N.J. Bernheim, A mutational assay system using the thymidine kinase locus in mouse lymphoma cells, Mutat. Res. 16 (1972) 77–87.

[2] D. Clive, K.O. Johnson, J.F.S. Spector, A.G. Batson, M.M.M. Brown, Validation and characterization of the L5178Y/TK$^{+/-}$ mouse lymphoma mutagen assay system, Mutat. Res. 59 (1979) 61–108.

[3] D. Clive, W. Caspary, P.E. Kirkby, R. Krehal, M. Moore, J. Mayo, T.J. Oberly, Guide for performing the mouse lymphoma assay for mammalian cell mutagenicity, Mutat. Res. 189 (1987) 143–156.

[4] A.D. Mitchell, A.E. Auletta, D. Clive, P.E. Kirby, M.M. Moore, B.C. Myhr, The L5178Y/*tk*$^{+/-}$ mouse lymphoma specific gene and chromosomal mutation assay: a phase III report of the U.S. Environmental Protection Agency Gene-Tox. Program, Mutat. Res. 394 (1997) 177–303.

[5] J. Cole, K. Harrington-Brock, M.M. Moore, The mouse lymphoma assay in the wake of ICH4 — where are we now? Mutagenesis 14 (3) (1999) 265–270.

[6] J. Cole, C.F. Arlett, M.H.L. Green, J. Lowe, W. Muriel, A comparison of the agar cloning and microtitration techniques for assaying cell survival and mutation frequency in L5178Y mouse lymphoma cells, Mutat. Res. 111 (1983) 371–386.

[7] J. Cole, W.J. Muriel, B.A. Bridges, The mutagenicity of sodium fluoride to L5178Y [wild-type and TK$^{+/-}$(3.7.2C)] mouse lymphoma cells, Mutagenesis 1 (1986) 157–167.

[8] T.J. Oberly, D.L. Yount, M.L. Garriot, A comparison of the soft agar and microtitre methodologies for the L5178 *tk*$^{+/-}$ mouse lymphoma assay, Mutat. Res. 388 (1997) 59–66.

[9] M.M. Moore, D. Clive, J.C. Hozier, B.E. Howard, A.G. Batson, N.T. Turner, J. Sawyer, Analysis of trifluorothymidine-resistant (TFT^{r}) mutants of L5178Y TK$^{+/-}$ mouse lymphoma cells, Mutat. Res. 151 (1985) 161–174.

[10] J. Hozier, J. Sawyer, M. Moore, B. Howard, D. Clive, Cytogenetic analysis of the L5178Y/TK$^{+/-}\rightarrow^{-/-}$ mouse lymphoma mutagenesis assay system, Mutat. Res. 84 (1981) 169–181.

[11] W.F. Blazak, F.J. Los, C.J. Rudd, W.J. Caspary, Chromosome analysis of small and large L5178Y mouse lymphoma cell colonies. Comparison of trifluorothymidine-resistant and unselected cell colonies from mutagen-treated and control cultures, Mutat. Res. 224 (1989) 197–208.

[12] M.C. Liechty, J.M. Scalzi, K.R. Sims, H. Crosby Jr., D.L. Spencer, L.M. Davis, W.J. Caspary, J.C. Hozier, Analysis of large and small colony L5178Y *tk*$^{-/-}$ mouse lymphoma mutants by loss of heterozygosity (LOH) and by whole chromosome 11 painting: detection or recombination, Mutagenesis 13 (5) (1998) 461–474.

[13] M.L. Applegate, M.M. Moore, C.B. Broder, A. Blurrell, G. Juhn, K.L. Kaswek, P.-F. Lin, A. Wadhams, J.C. Hozier, Molecular dissection of mutations at the heterozygous thymidine kinase locus in mouse lymphoma cells, Proc. Natl. Acad. Sci. U.S.A. 87 (1990) 51–55.

[14] D. Clive, P. Glover, M. Applegate, J. Hozier, Molecular aspects of chemical mutagenesis in L5178Y/*tk*$^{+/-}$ mouse lymphoma cells, Mutagenesis 5 (1990) 191–197.

[15] L.S. Clark, D.W. Hart, P.J. Vojta, K. Harrington-Brock, J.C. Barett, M.M. Moore, K.R. Tindall, Identification of chromosomal assignment of two heterozygous mutations in *Trp*53 gene in L5178Y/Tk$^{+/-}$ 3.7.2C mouse lymphoma cells, Mutagenesis 13 (5) (1998) 427–434.

[16] K. Dearfield, A. Auletta, M. Cimino, M. Moore, Considerations in the U.S. Environmental Protection Agency's testing approach for mutagenicity, Mutat. Res. 258 (1991) 259–283.

[17] ICH, Topic S2A Genotoxicity: Guidance on Specific Aspects of Regulatory Genotoxicity Tests for Pharmaceuticals, International Conference on Harmonisation of Technical Requirements for Registration of Pharmaceuticals for Human Use, Harmonised Tripartite Guideline CPMP/ICH/141/95, Approved September, 1995 (see website http://www.ifpma.org/ich1.html).

[18] ICH, Topic S2B Genotoxicity: A Standard Battery for Genotoxicity Testing of Pharmaceuticals. International Conference on the Harmonisation of Technical Requirements for Registration of Pharmaceuticals for Human Use. Step 4 Guideline, Brussels, July, 1997 (see website http://www.ifpma.org/ich1.html).

[19] M. Honma, M. Hayashi, H. Shimada, N. Tanaka, S. Wakuri, T. Awogi, K.I. Yamamoto, N.-U. Kodani, Y. Nishi, M. Nakadate, M.T. Sofuni, Evaluation of the mouse lymphoma *tk* assay (microwell method) as an alternative to the in vitro chromosomal aberration test, Mutagenesis 14 (1999) 5–22.

[20] M. Honma, L.-S. Zhang, H. Sakamoto, M. Ozaki, K. Takeshita, M. Momose, M. Hayashi, T. Sofuni, The need for long-term treatment in the mouse lymphoma assay, Mutagenesis 14 (1999) 23–29.

[21] OECD Guideline 476, In vitro Mammalian Cell Gene Mutation Test, updated and adopted July 21, 1997.

[22] M.M. Moore et al., The Mouse Lymphoma Thymidine Kinase locus (*tk*) gene mutation assay: International Workshop on Genotoxicity Test Procedures (IWGTP) Workgroup report, Environ. Mol. Mutagen. 35 (2000) 185–190.

[23] L. Müller, Y. Kikuchi, G. Probst, L. Schechtman, H. Shimada, T. Sofuni, D. Tweats, ICH-Harmonised guidances on genotoxicity testing of pharmaceuticals: evolution, reasoning and impact, Mutat. Res. 436 (1999) 195–225.

[24] J. Cole, M. Fox, C. Garner, D.B. McGregor, J. Thacker, Gene mutation assays in cultured mammalian cells, D.J. Kirkland

Questions? Contact FDA/CDRH/OCE/DID at CDRH-FOISTATUS@fda.hhs.gov or call 301-796-8118.

Records processed under FOIA Request #2015-1305; Released by CDRH on 05-11-2016.

(Ed.), Basic Mutagenicity Tests UKEMS Recommended Procedures, Cambridge Univ. Press, 1990, pp. 87–114.

[25] W.D. Robinson, M.H.L. Green, J. Cole, R.C. Garner, M.J.R. Healy, D. Gatehouse, Statistical evaluation of bacterial/mammalian fluctuation tests, in: D.J. Kirkland (Ed.), Statistical Evaluation of Mutagenicity Test Data, Cambridge Univ. Press, 1990, pp. 102–140.

[26] D. Clive, G. Bolcsfoldi, J. Clements, J. Cole, M. Honma, J. Majeska, M. Moore, L. Müller, B. Myhr, T. Oberly, M.-C. Oudelhkim, C. Rudd, H. Shimada, T. Sofuni, V. Thybaud, P. Wilcox, Consensus agreement regarding protocol issues discussed during the mouse lymphoma workshop: Portland, Oregon, May 7, 1994, Environ. Mol. Mutagen. 25 (1995) 165–168.

[27] T. Sofuni, P. Wilcox, H. Shimada, J. Clements, M. Honma, D. Clive, M. Green, V. Thybaud, R.H. San, B.M. Elliott, L. Müller, Mouse lymphoma workshop: Victoria, British Columbia, Canada, March 27, 1996. Protocol issues regarding the use of the microwell method of the mouse lymphoma assay, Environ. Mol. Mutagen. 29 (1997) 434–438.

[28] M.M. Moore, D.D. Collard, K. Harrington-Brock, Failure to adequately use positive control data leads to poor quality mouse lymphoma data assessments, Mutagenesis 14 (3) (1999) 261–263.

[29] M.M. Moore, K. Harrington-Brock, J. Cole, Issues for conducting the microtiter version of the mouse lymphoma thymidine kinase (*tk*) assay and a critical review of data generated in a collaborative trial using the microtiter method, Mutagenesis 14 (3) (1999) 271–281.

[30] D. Brusick, Genotoxic effects in cultured mammalian cells produced by low pH treatment conditions and increased ion concentrations, Environ. Mutagen. 8 (1986) 879–886.

[31] D. Scott, S.M. Galloway, R.R. Marshall, M. Ishidate Jr., D. Brusick, J. Ashby, B.C. Myhr, Genotoxicity under extreme culture conditions. A report from ICPEMC Task Group 9, Mutat. Res. 257 (1991) 147–204.

[32] D.J. Kirkland, J. Clements, Recommendations for spacing of test chemical concentrations in the mouse lymphoma *tk* mutation assay (MLA), Mutat. Res. 415 (1998) 159–163.

[33] M. Honma, M. Momose, A. Matsuoka, H. Sakamoto, M. Hayashi, T. Sofuni, Spindle poisons induce gene mutation through mitotic nondisjunction in mouse lymphoma cells, Environ. Mol. Mutagen. 33 (Supplement 30) (1999) 33.

[34] J. Clements, M. Fellows, J. Wilkinson, L. Reeve, M. Hayes, D. Middleton, R. Plaxton, The mouse lymphoma TK assay (MLA): experiences with continuous (24 hour) treatment incubation, Mutat. Res. 379 (Supplement 1) (1997) 194.

[35] J. Clements, M. Fellows, L. Reeve, J. Wilkinson, M. Hayes, D.J. Kirkland, Environ. Mol. Mutagen. 31 (Supplement 29) (1998) 45.

[36] M.R. O'Donovan, M.G. Clare, J. Clements, M. Fellows, J. Oliver, D. Ong, D. Gatehouse, Are aneugens mutagenic in the Mouse Lymphoma TK Assay? Mutagenesis 14 (6) (1999) 648.

[37] R.R. Marshall, M. Murphy, D.J. Kirkland, K.S. Bentley, Fluorescence in situ hybridisation with chromosome-specific centromeric probes: a sensitive method to detect aneuploidy, Mutat. Res. 372 (1996) 233–245.

[38] I. Eckert, W.J. Caspary, M. Nüsse, M. Liechty, L. Davis, H. Stopper, Micronuclei containing whole chromosomes harbouring the selectable gene do not lead to mutagensis, Mutagenesis 12 (5) (1997) 379–382.

Questions? Contact FDA/CDRH/OCE/DID at CDRH-FOISTATUS@fda.hhs.gov or call 301-796-8118.