Instructions For Use
AEGEA Vapor System™
Model # GEA-SYS-12-0400

AEGEA Medical Inc.,
2686 Middlefield Road, Suite A
Redwood City, CA USA 94063
Phone: + 1 (650) 701- 1125 **Fax**: + 1 (650) 701- 1126

Table of Contents

1.0 SYSTEM DESCRIPTION 4
2.0 INDICATION FOR USE 5
3.0 CONTRAINDICATIONS 5
4.0 WARNINGS 6
5.0 GENERAL WARNINGS 7
6.0 TECHNICAL WARNINGS 7
7.0 PRECAUTIONS 9
8.0 ADVERSE EVENTS 11
9.0 CLINICAL STUDY SUMMARY 14
10.0 PATIENT SELECTION 27
11.0 PATIENT COUNSELING 27
12.0 CLINICAL USE CHECKLIST 28
13.0 HOW SUPPLIED 28
14.0 INSTRUCTIONS FOR USE 28
15.0 PARTS LIST ORDERING INFORMATION AND RELATED PARTS AND ACCESSORIES 39
16.0 SERVICE REPRESENTATIVES 39
17.0 SYMBOLS KEY 40

CAUTION: FEDERAL LAW RESTRICTS THIS DEVICE TO SALE BY OR ON THE ORDER OF A PHYSICIAN TRAINED IN THE USE OF THE AEGEA VAPOR SYSTEM.

Read all instructions, cautions and warnings prior to use.

Failure to follow any instructions or to heed any warnings or precautions could result in serious patient injury.

The AEGEA Vapor Probe must be used only in conjunction with the AEGEA Vapor Generator and the AEGEA Vapor Generator must be used only in conjunction with the AEGEA Vapor Probe. Both are to be used only by physicians who have reviewed and understand the AEGEA Vapor System labeling and training materials.

The AEGEA Vapor Probe is not made from natural rubber latex.

Prior to using the AEGEA Vapor System, carefully read the entire Instructions for Use as well as the AEGEA Vapor Generator Operator's Manual to obtain information about the proper procedures for inspecting, preparing and operating the AEGEA Vapor Generator.

Contact AEGEA Medical with any questions about the information contained in the Instructions for Use or in the AEGEA Vapor Generator Operator's Manual.

1.0 SYSTEM DESCRIPTION

The AEGEA Vapor System consists of: (1) a reusable Vapor Generator with a power cord and attached IV Pole that includes a Laser Level and assembly hardware; (2) the single use AEGEA Vapor Procedure Kit that includes a sterile AEGEA Vapor Probe and a Supply and Drain Accessory that delivers water to the Vapor Generator and has a collection bag for drainage of water from the Vapor Generator.

AEGEA Vapor Generator and Vapor Probe

The single use AEGEA Vapor Probe has been designed with SmartSeal™ technology to optimize device placement and to protect the cervix and vagina from thermal effects. The soft slender tip of the Vapor Probe is inserted transcervically into the uterine cavity. The Vapor Probe delivers water vapor produced by the AEGEA Vapor Generator to ablate the endometrial lining of the uterus.

The AEGEA Vapor System has been designed with the IntegrityPro™ safety feature which utilizes SmartSeal™ technology designed to ensure that the Vapor Probe tip is correctly placed in the uterine cavity and that there are no leaks from the uterine cavity or cervix through which vapor could escape. The IntegrityPro™ safety feature is comprised of a Uterine Cavity Integrity Test and a Device Lumen Patency Test. Both tests are performed with normal saline (0.9% NaCl) after placement of the Vapor Probe and prior to vapor delivery. The Uterine Cavity Integrity Test is designed to assess for leaks in the uterus or through the cervical canal through which vapor could escape. The Device Lumen Patency Test is performed directly following a successful Uterine Cavity Integrity Test. The Device Lumen Patency test is designed to confirm the Vapor Probe tip is positioned appropriately and that the Vapor Probe delivery lumen is not blocked by blood or tissue that could have impacted the saline flow rate and results of the Integrity Test. Vapor delivery is initiated only after both tests pass consecutively.

Vapor is delivered to the uterus for 140 seconds, with a treatment time of 120 seconds. The first 20 seconds of vapor delivery serve to displace saline remaining in the uterus and device lines after the Device Lumen Patency Test. These 20 seconds are referred to as the “saline flush.” Intrauterine vapor pressure is regulated by the AEGEA Vapor Generator, based on feedback from a pressure sensor near the distal tip of the Vapor Probe.

During treatment, SmartSeal™ provides automated real-time sealing balloon pressure, uterine

pressure and cervical temperature monitoring with active management of uterine and cervical seal designed to ensure that vapor delivery is confined to the uterine cavity or terminated when a leak is detected.

2.0 INDICATION FOR USE

The AEGEA Vapor System is indicated to ablate the endometrial lining of the uterus in premenopausal women with menorrhagia (excessive uterine bleeding) due to benign causes for whom childbearing is complete.

3.0 CONTRAINDICATIONS

The AEGEA Vapor System is contraindicated for use in:

- A patient who is pregnant or who wants to become pregnant in the future.

  PREGNANCIES FOLLOWING ABLATION CAN BE DANGEROUS FOR BOTH MOTHER AND FETUS.

- A patient with known or suspected uterine cancer or pre-malignant conditions of the endometrium, such as unresolved adenomatous hyperplasia.
- A patient with endometrial hyperplasia as confirmed by histology.
- A patient with any anatomic condition (e.g., history of previous classical cesarean section or transmural myomectomy, including hysteroscopic and/or laparoscopic myomectomy performed immediately prior to the AEGEA Vapor System procedure).
- A patient currently on medications that could thin the myometrial muscle, such as long-term steroid use (except for inhaler or nasal therapy for asthma).
- A patient with a uterine length < 6cm (external cervical ostium to internal fundus).
- A patient with a history of a prior completed endometrial ablation procedure and/or endometrial resection (including endometrial ablation/resection performed immediately prior to the AEGEA Vapor System procedure) regardless of the modality by which it was performed.

  REPEAT ABLATION MAY RESULT IN SERIOUS PATIENT INJURY.

- A patient with active genital or urinary tract infection (e.g., cervicitis, vaginitis, endometritis, salpingitis or cystitis) at the time of treatment.
- A patient with bacteremia, sepsis or systemic infection.
- A patient with an intrauterine device (IUD) currently in place.
- A patient with active pelvic inflammatory disease or known or suspected hydrosalpinx based on history or ultrasound at screening.

- A patient with undiagnosed vaginal bleeding.

4.0 WARNINGS

READ ALL INSTRUCTIONS CAREFULLY. FAILURE TO PROPERLY FOLLOW THE INSTRUCTIONS, WARNINGS, AND PRECAUTIONS MAY LEAD TO PATIENT INJURY.

DO NOT perform the AEGEA Vapor System procedure concomitantly with Essure® placement or prior to a satisfactory Essure® Confirmation Test. Ablation can cause intrauterine synechiae which can compromise (i.e., prevent the proper interpretation of) the modified hysteroscopy, which may be required for the Essure® Confirmation Test.

UTERINE PERFORATION

- Uterine perforation can occur during any procedure in which the uterus is instrumented. Use caution not to perforate the uterine wall when sounding, performing any hysteroscopic visualization of the uterus or dilatation of the endocervical canal if required, or inserting the Vapor Probe.

- The following indicates possible uterine perforation:

    - If the Vapor Probe can be inserted to a greater depth than was determined by the uterine sound device, and the setting of the Vapor Probe Slide Collar Adjustment Knob.

    - Multiple failures of the Uterine Cavity Integrity Test may be indicative of a possible uterine perforation or leak from the uterine cavity or a leak somewhere in the Vapor System. Although vapor cannot be delivered without passing the pre-procedure tests, proceed with caution as perforation may be present even if no leaks can be determined.

    - If the Vapor Generator automatically terminates vapor delivery due to a drop in vapor pressure.

- If a possible uterine perforation is suspected, the procedure should be terminated immediately.

- If the procedure is terminated due to a suspected uterine perforation, the patient should be evaluated for possible uterine perforation prior to discharge.

- If a perforation is present, and the procedure is not terminated, thermal injury to adjacent tissue may occur if vapor is being delivered.

- Although designed to detect a possible perforation of the uterine wall, the integrity test is an indicator only and it might not detect all possible perforations. Clinical judgment must always be used.

- **Post-treatment, any patient-reported signs/symptoms that could indicate a serious complication, e.g., bowel injury, should be thoroughly evaluated without delay.**

5.0 GENERAL WARNINGS

⚠ Endometrial ablation using the AEGEA Vapor System is not a sterilization procedure. Therefore, the patient should be advised of appropriate birth control methods.

⚠ Pregnancy is not likely after ablation, but it can happen. If it does, the risk of miscarriage and other problems are greatly increased. If a woman still wants to become pregnant, she should not have this procedure. Women who have endometrial ablation should use birth control until after menopause.[1]

⚠ Endometrial ablation does not eliminate the potential for endometrial hyperplasia or cancer of the endometrium and may mask the physician's ability to detect or make a diagnosis of such pathology.

⚠ Patients who undergo endometrial ablation procedures who have previously undergone tubal ligation may be at increased risk of developing post ablation tubal sterilization syndrome, which can require hysterectomy. This can occur as late as 10 years post-procedure.

⚠ Aseptic technique – Use aseptic technique in all patient procedures.

6.0 TECHNICAL WARNINGS

Failure to follow any instructions or failure to heed any warnings or cautions could result in serious patient injury.

⚠ Sterile. The AEGEA Vapor Probe has been sterilized with ethylene oxide (EO) gas, for one single-patient use only.

⚠ Non-sterile. The AEGEA Supply and Drain Accessory is provided non-sterile.

⚠ Do not use the AEGEA Vapor Probe or Supply and Drain Accessory if the packaging appears to be damaged or there is evidence of tampering.

⚠ Earth grounding reliability of the Vapor Generator is only achieved when equipment is connected to a receptacle designated "Hospital Grade". *Hospital grade receptacles may be*

---

[1] http://www.acog.org/Patients/FAQs/Endometrial-Ablation

marked with a green dot, or wording such as "Hospital Grade" or "Hosp. Grade". Consult your institution's biomedical department if unsure.

⚠ Risk of Infection or disease - Dispose of used device and waste products per standard institutional practices for biohazard waste.

⚠ For single use only. Do not reuse, reprocess or re-sterilize the Vapor Probe or Supply and Drain Accessory. Reuse, reprocessing or re-sterilization may compromise the structural integrity of the AEGEA Vapor Probe and/or lead to failure of the AEGEA Vapor Probe, which in turn may result in patient injury, illness or death. Reuse, reprocessing or re-sterilization may also create a risk of contamination of the AEGEA Vapor Probe and/or cause patient infection or cross-infection, including but not limited to, the transmission of infectious disease(s) from one patient to another. Contamination of the AEGEA Vapor Probe may lead to injury, illness or death of the patient.

⚠ The used AEGEA Vapor Probe must be treated as biohazardous waste and disposed of in accordance with hospital or clinic standard practice where the treatment is performed.

⚠ The AEGEA Vapor Probe must be used only in conjunction with the AEGEA Vapor Generator and is not to be used with other equipment or Vapor Generators.

⚠ The AEGEA Vapor Generator is not to be used with other devices.

⚠ Do not place the vapor conduit or outflow tubing over the patient's leg or in contact with any other part of the patient or user. The conduit and tubing carry water condensate and vapor and could cause thermal injury. The perforated end section of the outflow tubing discharges water condensate and vapor.

⚠ Place outlet end of the Vapor Probe's outflow line in the waste collection container (not provided) that is intended to collect vapor outflow. Do not place the outlet end of the vapor outflow line into the upper portion of an under-buttock drape due to the risk of severe burn to the patient. Ensure that the outlet end of the vapor outflow line is not submerged in fluid at any time during the procedure.

⚠ The physician must maintain control of the Vapor Probe (i.e., not hand off to another individual) for the duration of the vapor treatment to avoid compromising the cervical seal or device position. A compromise of cervical seal could result in vapor leakage and pressure loss, which could result in patient injury or early termination of vapor delivery.

⚠ An AEGEA vapor treatment cannot be performed without the successful completion of the Device Lumen Patency Test, after the successful completion of the Uterine Cavity Integrity Test. If the Device Lumen Patency Test indicates an obstructed Vapor Probe tip or lumen and the source of the obstruction cannot be identified and corrected, delivery of vapor cannot be initiated.

⚠ If clogging of the Vapor Probe by bleeding or debris is deemed the reason for a failed Device Lumen Patency Test the ablation procedure may be terminated and rescheduled. Alternately, if there is suspicion that the Vapor Probe tip is positioned in tissue, the Vapor Probe should be removed and repositioned upon insertion. Follow the on-screen prompts to deflate the Vapor Probe balloons before removal and prior to insertion.

⚠ Use caution not to pinch or manipulate any tubing (i.e. Vapor Conduit, Outflow Line, and Integrity Test tubing) while performing endometrial ablation with the AEGEA Vapor System.

⚠ After completion of the Uterine Cavity Integrity Test and prior to the delivery of vapor treatment, if there is any suspicion that the Vapor Probe is no longer properly positioned, or if the Tenaculum Stabilizer was not properly placed, the Vapor Probe balloons should be deflated and the procedure should be re-started.

⚠ Once vapor delivery has been initiated, maintain the position of the tenaculum relative to the Vapor Probe using the Tenaculum Stabilizer. Do not remove the Vapor Probe until the treatment has been completed as confirmed by the display screen on the Vapor Generator.

⚠ In the event of loss of power during vapor delivery, Vapor Probe balloon inflation will be maintained. Wait 15 seconds for vapor to dissipate from the uterus through the outflow tubing. Disconnect the Vapor Probe Sensor Connector from the Vapor Generator to allow the Vapor Probe balloons to deflate, and carefully remove the Vapor Probe from the uterus. It will be necessary to restore power to the Vapor Generator in order to disconnect the Vapor Probe Vapor Connector.

⚠ Inspect Vapor Generator components regularly for damage, and do not use them if damage is apparent.

⚠ For additional warnings regarding the Vapor Generator, please read the Operator's Manual for AEGEA Vapor Generator.

7.0 PRECAUTIONS

⚠ The structure of the endometrial cavity and uterine wall should be thoroughly evaluated to ensure suitability for thermal endometrial ablation. The use of transvaginal ultrasonography, saline infusion sonohysterography, hysteroscopy, or a combination of these procedures should be performed to evaluate the uterine architecture for structural anomalies. These various imaging modalities can also be used to identify the position of an obvious and visible structural anomaly from prior transmural uterine surgery such as a Cesarean scar defect to confirm that it does not present with thin myometrium located within the uterine cavity where thermal endometrial ablation will be performed. If a structural anomaly is found within the uterine cavity, then best clinical judgment should be used before performing thermal endometrial ablation.

- ⚠ The AEGEA Vapor System procedure is intended to be performed only once during a single operative visit. A repeat endometrial ablation in the same operative setting with the AEGEA Vapor System has not been studied and the effects are unknown.

- ⚠ It has been reported in the literature[2] that patients with a severely anteverted, retroflexed or laterally displaced uterus are at greater risk of uterine wall perforation during any intrauterine manipulation.

- ⚠ A false passage can occur during any procedure in which the uterus is instrumented, especially in cases of severely anteverted, retroflexed or laterally displaced uteri. Use caution to ensure that the device is properly positioned in the uterine cavity.

- ⚠ To ensure proper operation, never use other products or components not identified in these instructions with the AEGEA Vapor System.

- ⚠ Exercise care when handling liquids around electrical equipment. If either a large amount of water has been spilled, or it is suspected that water may have infiltrated the Vapor Generator, do not attempt to operate the Vapor Generator.

- ⚠ Confirm the height of the saline bag used for the Uterine Cavity Integrity Test and Device Lumen Patency Test is properly adjusted relative to the height of the patient's uterus to allow the proper fluid flow rate during the two tests. The laser beam from the Laser Level is to be used as a means to assist with proper height adjustment.

- ⚠ Patients who have undergone endometrial ablation and who are later placed on hormone replacement therapy should have progestin included in their regimen in order to avoid the increased risk of endometrial adenocarcinoma associated with unopposed estrogen replacement therapy irrespective of whether total amenorrhea has been achieved after ablation treatment.

- ⚠ The safety and effectiveness of the AEGEA System has not been fully evaluated in patients with: a uterine sound measurement > 12 cm, submucosal fibroids that obstruct the uterine cavity, bicornuate uteri, known uterine septum >1/3 cavity length, suspected adenomyosis.

- ⚠ Patients must be informed of the risks and possible adverse events associated with endometrial ablation and use of the AEGEA Vapor System.

- ⚠ For additional precautions for Vapor Generator, please read the Operator's Manual for AEGEA Vapor Generator.

---

[2] Kho KA, Chamsy DJ. Perforated Intraperitoneal Intrauterine Contraceptive Devices: Diagnosis, Management and Clinical Outcomes. J Minim Invasiv Gynecol Jul/Aug 2014 21(4); p596-601.

8.0 ADVERSE EVENTS

The following device and procedure-related adverse events have been reported with use of the AEGEA Vapor System and are presented in tabular form for each cohort.

The most common procedure-related complications for the Pivotal subjects within 1 year include:

1. Uterine cramping (40%)
2. Nausea (6.5%)
3. Vomiting (3.2%)
4. Vaginal infection (2.6%)
5. Abdominal pain (2.6%)
6. Abdominal Distention (1.9%)
7. Endometritis (1.3%)

Other events were limited to single occurrences (0.6%).

Safety and Pivotal Subjects

Sixty-six (66) patients were treated and followed for their safety results for three (3) months only. This is called the "Safety Study". The next 155 patients were treated and followed for one (1) year (longer-term follow up is in progress). This study is called the "Pivotal Study".

Pivotal Subjects – Adverse Events

Table 1 below shows the number and percentage of Pivotal subjects who reported device or procedure-related adverse events, one or more times, during the 12-month follow-up period. **There were no reported serious adverse device effects (SADEs), nor any reported SAEs, that were procedure related.**

It should be noted that the onset of uterine cramping decreased from 34.2% on the day of ablation to 1.9% the day after ablation. The severity of cramping was reported as mild to moderate in 97% of subjects. Uterine cramping is a known side effect of endometrial ablation.

Table 1. Pivotal Subjects Number and Percentage of Subjects with One or More Related[a] Adverse Events by Time of Occurrence through 12 months

N=155					
Adverse Event	Day of Ablation	Day 1 after Ablation	>Day 1 to ≤2 weeks	>2 Weeks to 1 year	Total
Uterine cramping	53 (34.2%)	3 (1.9%)	2 (1.3%)	6 (3.9%)	62[b] (40.0%)
Nausea	10 (6.5%)				10 (6.5%)
Vomiting	5 (3.2%)				5 (3.2%)
Vaginal infection		1 (0.6%)	3 (1.9%)	1 (0.6%)	4[b] (2.6%)

N=155					
Adverse Event	Day of Ablation	Day 1 after Ablation	>Day 1 to ≤2 weeks	>2 Weeks to 1 year	Total
Abdominal pain	4 (2.6%)				4 (2.6%)
Abdominal distension	1 (0.6%)	1 (0.6%)	1 (0.6%)		3 (1.9%)
Endometritis			2 (1.3%)		2 (1.3%)
Syncope	1 (0.6%)				1 (0.6%)
Back pain over SI joint	1 (0.6%)				1 (0.6%)
Difficulty with defecation or micturition (urination)		1 (0.6%)			1 (0.6%)
Fever		1 (0.6%)			1 (0.6%)
Urinary tract infection (UTI)		1 (0.6%)			1 (0.6%)
Vaginal bleeding			1 (0.6%)		1 (0.6%)
External vaginal itching			1 (0.6%)		1 (0.6%)
Lightheadedness			1 (0.6%)		1 (0.6%)
Spotting			1 (0.6%)		1 (0.6%)
Intermittent Vaginal Spotting				1 (0.6%)	1 (0.6%)
Prolonged Spotting				1 (0.6%)	1 (0.6%)
Hematometra				1 (0.6%)	1 (0.6%)
Low back pain				1 (0.6%)	1 (0.6%)
Menometrorrhagia				1 (0.6%)	1 (0.6%)

[a]Possible, probable or definitely related to device or procedure
[b]Subjects with more than one occurrence of same event are only counted once

Safety Subjects – Adverse Events

Safety Subjects (n=66) were evaluated for safety only. **Table 2** below shows the number and percentage of Safety subjects who reported device or procedure related adverse events, one or more times, up to the date of subject early termination from the trial. **There were no reported serious adverse device effects (SADEs) nor any reported serious adverse events (SAEs) that were procedure related.**

Table 2. Safety Subjects Number and Percentage of Subjects with One or More Related[a] Adverse Events by Time of Occurrence through 6 months

Patient number =66						
Adverse Event	Day of Ablation	Day 1 after Ablation	>Day 1 to ≤2 weeks	>2 Weeks to 3 months	>3 months to 6 months [b]	Total
Uterine cramping	32 (48.5%)	1 (1.5%)			1 (2.8%)	34 (51.5%)
Vaginal infection			3 (4.5%)	1 (1.5%)		4 (6.1%)
Nausea	2 (3.0%)					2 (3.0%)
Vomiting	2 (3.0%)					2 (3.0%)
Cough	1 (1.5%)					1 (1.5%)
Transient redness on buttock	1 (1.5%)					1 (1.5%)
Spotting	1 (1.5%)					1 (1.5%)
Endometritis			1 (1.5%)			1 (1.5%)
Abdominal pain				1 (1.5%)		1 (1.5%)
Uterine tenderness				1 (1.5%)		1 (1.5%)

[a]Possible, probable or definitely related to device or procedure
[b]36 patients were followed at 6 months.

Anticipated Post-Procedural Symptoms

For any endometrial ablation procedure, commonly reported postoperative events include the following:

- Post-operative cramping can range from mild to severe. This cramping will typically occur on the day of ablation and typically lasts for a few days following the procedure.
- When present, nausea and vomiting typically occur immediately following the procedure, are associated with anesthesia and can be managed with medication.
- Vaginal discharge
- Vaginal bleeding/spotting

Other Adverse Events

As with ***all*** endometrial ablation procedures, serious injury or death can occur. The following adverse events could occur or have been reported in association with the use of other endometrial ablation systems and may occur when the AEGEA Vapor System is used:

- Post-ablation tubal sterilization syndrome
- Pregnancy-related complications
  Note: Pregnancy following any endometrial ablation procedure is dangerous to both the mother and the fetus
- Thermal injury to adjacent tissue including bowel, bladder, cervix, vagina, vulva and/or perineum, fallopian tubes, ureter
- Perforation of uterine wall
- Hemorrhage
- Uterine necrosis
- Air embolism
- Infection or sepsis
- Complications leading to serious injury or death
- Cervical or vaginal laceration
- Transient change in appearance of the cervical epithelium
- Thermal injury to extremity
- Mechanical bowel injury
- Diarrhea
- Headache

9.0 CLINICAL STUDY SUMMARY

Purpose

The purpose of the AEGEA Pivotal Clinical Study was to demonstrate the safety and effectiveness of the AEGEA Vapor System in the treatment of heavy menstrual bleeding from benign causes in women whose childbearing is complete.

Pretreatment

Prior to undergoing the ablation procedure, the subject's endometrial lining was thinned using medications or the procedure was scheduled in the early proliferative phase (day 5-10 of cycle). Dilatation & Curettage was not allowed prior to the ablation procedure, with the exception of a light suctioning with a cannula to remove residual clots or loose intracavity debris. The

investigator could reschedule the procedure if there was any concern that endometrial thinning was not properly accomplished.

Study Endpoints

Safety Endpoints

The following safety endpoints included an assessment of both the Safety and Pivotal subjects:

- AEGEA Vapor System-related serious adverse events
- Endometrial ablation procedure-related serious adverse events
- The overall rate and severity of all reported adverse events

Primary Effectiveness Endpoint

The primary effectiveness endpoint was the binary outcome of reduction of menstrual blood loss indicated by a validated Pictorial Blood Loss Assessment Chart (PBLAC) score of ≤75 12 months after the endometrial ablation procedure. The primary objective of the study was to show that the percent of subjects in the Intent to Treat (ITT) analysis cohort with a PBLAC score ≤75 was more than the Objective Performance Criteria (OPC) of 66%. The OPC is based on the lower bound of the 95% confidence interval of the average success rate for the first five approved Global Endometrial Ablation (GEA) devices, which also used the PBLAC instrument to assess reduction in bleeding after treatment.

Secondary Effectiveness Endpoints

The secondary effectiveness endpoints included the following measures of clinical outcome:

- The need for surgical or medical intervention to treat abnormal bleeding at any time within the first 12 months after treatment
- Quality of life using the Menorrhagia Impact Questionnaire 12 months after treatment
- Patient Satisfaction 12 months after treatment

Additional Analyses

Additional analyses were:

- Amenorrhea rate (PBLAC=0)
- Mean procedure time
- Anesthesia use and setting of care
- Post-operative pain using a Numerical Rating Scale
- Return to work and normal daily activities
- Dysmenorrhea (pain during menstruation) as derived from the Aberdeen Menorrhagia Severity Scale (AMSS)
- Safety and effectiveness in women with and without Cesarean Section

- Safety and effectiveness in subjects with myomas
- Safety and effectiveness in subjects with uterine length 10-12cm
- Safety and effectiveness in subjects with Essure® Permanent Birth Control
- Impact on sex life
- Recommend ablation procedure to a friend

Methods

A single arm, prospective, multicenter clinical study was conducted at 14 sites by investigators experienced with endometrial ablation. Subjects were required to meet a set of entry criteria.

Key Inclusion Criteria

1. Women aged 30 to 50 years
2. Self-reported history of heavy menstrual bleeding in at least 3 of the last 6 months
3. Predictable cyclic menstrual cycles over past 6 months
4. Excessive uterine bleeding (PBLAC score of ≥150)
5. Pre-menopausal at enrollment
6. Normal PAP
7. Normal endometrial biopsy
8. Willing to use reliable contraception

Key Exclusion criteria

1. Pregnant
2. Desires future childbearing
3. Presence of an IUD
4. Previous endometrial ablation procedure
5. Evidence of STI
6. Evidence PID
7. Active infection of the genitals, vagina, cervix, uterus or urinary tract
8. Active endometritis
9. Active bacteremia, sepsis or other active systemic infection
10. Gynecologic malignancy
11. Endometrial hyperplasia
12. Known clotting defects or bleeding disorders
13. On anticoagulant therapy
14. Prior uterine surgery
15. Currently on medications that could thin the myometrial muscle
16. Severe dysmenorrhea secondary to adenomyosis
17. Abnormal uterine cavity
18. Hydrosalpinx
19. Uterine length <6cm or >12 cm
20. Cannot tolerate anesthesia

Patient population

The baseline demographic and gynecological history parameters are presented below in **Table 3**. Pooling of the data involved an assessment of the demographic and gynecological history data among sites to verify the ablation procedures were conducted in similar patient populations as prescribed in the protocol.

Table 3. Demographics and Gynecological History

	N=155
Age	
Mean ± SD (median)	39.8 ± 5.2 (40.0)
Range (min, max)	(30, 50)
N Age 30-39	76 (49.0%)
N Age 40-50	79 (51.0%)
Ethnicity	
Hispanic or Latino	36 (23.2%)
Not Hispanic or Latino	119 (76.8%)
Race	
American Indian or Alaska Native	0 (0.0%)
Asian	3 (1.9%)
Black or African American	5 (3.2%)
Native Hawaiian or Other Pacific Islander	0 (0.0%)
White	147 (94.8%)
BMI, kg/m^2	
Mean ±SD (median)	30.0 ± 7.4 (29.0)
Range (min, max)	18, 51
Gravidity	
Mean ± SD (median)	3.2 ± 1.7 (3.0)
Range (min, max)	0, 13
Parity	
Mean ± SD (median)	2.6 ± 1.3 (3.0)
Range (min, max)	0, 7
Menstrual History	
Dysmenorrhea	132 (85.2%)
PBLAC Score at Baseline	
Mean ± SD (median)	320.7 ± 155.9 (278.3)
Range (min, max)	153.0, 865.8
FSH (IU/L)	
Mean ± SD (median)	6.2 ± 3.7 (5.3)
Range (min, max)	0.10, 21.2

Pivotal Subjects Disposition

A total of 155 Pivotal subjects were scheduled for endometrial ablation with the AEGEA Vapor System. **Table 4** below provides the disposition for the Pivotal subjects.

Table 4. Pivotal Subjects Disposition

	N
ITT Analysis Cohort Vapor Ablation Attempted	**155**
No treatment received Integrity Test did not pass Patency Test did not pass	 2 4
mITT Analysis Cohort 12-month follow-up	**149**
Incomplete treatment	2
Lost to follow-up	1
Suicide	1
Hysterectomy for pain	1
IUD for heavy bleeding	1
Major protocol deviations	2
Per Protocol Analysis Cohort 12-month follow-up	**141**

Ablation Procedure Results

The ablation procedure data are summarized below in **Table 5**. The mean average procedure time was 4.2 minutes. Procedure time is defined as the difference between the time of Vapor Probe insertion and the time of Vapor Probe removal.

The anesthesia regimen in 94% (146/155) of ablation procedures included combinations of IV, oral and local anesthesia. General anesthesia was used in 6% (9/155) of cases.

97% of the ablation procedures were performed in an office or ambulatory center/outpatient setting of care. The ablation procedure was performed in an operating room in 3% of cases due to the availability of only an operating room setting for that particular investigational site.

Uterine position was anteverted in 53% (82/155) of subjects. Cervical dilation was utilized in 66% (102/155) of cases with a mean dilator size of 6.3mm.

Table 5. Ablation Procedure Results

	N = 155
Average Procedure Time (min)	
Mean ± SD (median)	4.2 ±.1.6 (4.0)
Range (min, max)	(0, 12)
Anesthesia Regimen	
IV, Oral, Local	118 (76%)
Local, Oral	28 (18%)
General	9 (6%)
Setting of Care	
Office	82 (53%)
Ambulatory Center/Outpatient	68 (44%)
Operating Room	5 (3%)
Uterine Position[a]	
Anteverted	82 (53%)
Midline-Axial	31 (20%)
Retroverted	24 (16%)
Anteflexed	15 (9%)
Retroflexed	10 (7%)
Cervical Dilation (mm)	N=102
Mean ± SD (median)	6.3 ± 1.1 (6.0)
Range (min, max)	(2.5, 9.0)
Uterine Length (cm)	N=154
Mean ± SD (median)	9.0 ± 1.1 (9.0)
Range (min, max)	(6.0, 12.0)
Uterine Length ≤10	141 (92%)
Uterine Length >10-12	13 (8%)

[b]Subjects may have more than one response for uterine position since there may be -version and -flexion positions.

Primary Effectiveness Endpoint:

The primary effectiveness endpoint was the binary outcome of reduction of menstrual blood loss indicated by a PBLAC score of ≤75 12 months after the endometrial ablation procedure. The primary objective of the study was to show that the percent of subjects in the Intent to Treat (ITT) analysis cohort with a PBLAC score ≤75 was more than the Objective Performance Criteria (OPC) of 66%.

The primary effectiveness endpoint results are as follows:

- 78.7% (122/155) of subjects in the ITT analysis cohort had a PBLAC score ≤75 12 months after the endometrial ablation procedure. This is statistically significantly greater than the OPC of 66% (p-value = 0.0004).

Table 6. Effectiveness by Analysis Cohort at 12-Month Follow-up[3]

Outcome	ITT N=155
PBLAC ≤75	122 (78.7%)
Amenorrhea (no menses)	30 (19.4%)

Secondary Effectiveness Endpoints:

Need for Surgical or Medical Intervention

There was only one subject who had medical intervention (insertion of an IUD) to treat ongoing heavy menstrual bleeding prior to her 12-month visit. No subjects required surgical intervention to treat ongoing heavy menstrual bleeding.

Quality of Life

The Menorrhagia Impact Questionnaire (MIQ) was administered at baseline and follow-up to assess quality of life. . The baseline mean score of 14.7 reduced by 8.1 on average to a mean score of 6.6 at month 12 (change from baseline 95% Confidence Interval (CI) (-8.7, -7.6)). These data are presented below in **Table 7**.

Table 7. Quality of Life Improvement (MIQ)

	Baseline (N=141)	Month 12 (N=141)	Change from Baseline
Mean ±SD (median)	14.7 ±42.9 (15.0)	6.6 ±.1.8 (6.0)	-8.1 ±. 3.4 (-8.0)
Range (min, max)	(6, 21)	(4, 15)	(-15, 0)
95% CI			(-8.7, -7.6)

[3] PBLAC outcomes, including the amenorrhea outcome (PBLAC=0) represent the most recent menses within ± 8 weeks of the 12-month follow-up.

Patient satisfaction 12 months after treatment

Subjects were asked to report their overall satisfaction with the ablation procedure. The data show that 90.8% (128/141) were either satisfied or very satisfied at the 12-month follow-up visit. These data are presented below in in **Table 8**.

Table 8. Patient Satisfaction at Month 12

Satisfaction Response	Month 12 (N=141)
Very Satisfied or Satisfied	128 (90.8%); 95% CI (84.8%, 95.0%)
Very Satisfied	99 (70.2%)
Satisfied	29 (20.6%)
Not Sure	10 (7.1%)
Dissatisfied	3 (2.1%)
Very Dissatisfied	0 (0.0%)

Additional Analyses:

Amenorrhea rate

Data provided in "Primary Effectiveness", Table 6.

Mean procedure time

Data provided in "Ablation Procedure Results", Table 5.

Anesthesia use and setting of care

Data provided in "Ablation Procedure Results", Table 5.

Recommend ablation procedure to a friend

At the 12-month follow-up visit, 92.9% (130/140); 95% CI (86.5, 96.0) of subjects also reported that they would recommend the ablation procedure to a friend.

PBLAC ≤75 Subjects with and without Cesarean Section

There were 43.2% (67/155) of subjects who had one or more prior C-sections and 56.8% (88/155) who did not have a prior C-section at the time of endometrial ablation. As shown below in **Table 9**, 80.6% (54/67) of women with a prior C-section and 77.3% (68/88) without a prior C-section in the ITT analysis cohort met the study success criteria of PBLAC ≤75. These data demonstrate that women with prior C-sections achieved similar outcomes in menstrual

bleeding reduction when compared to women without prior C-sections. Data are presented below in **Table 9**.

Table 9. PBLAC ≤75 in Subjects with and without C-Section

	ITT
With C-Section	54/67 (80.6%)
Without C-Section	68/88 (77.3%)
All Subjects	122/155 (78.7%)

Precaution: The structure of the endometrial cavity and uterine wall should be thoroughly evaluated to ensure suitability for thermal endometrial ablation. The use of transvaginal ultrasonography, saline infusion sonohysterography, hysteroscopy, or a combination of these procedures should be performed to evaluate the uterine architecture for structural anomalies. These various imaging modalities can also be used to identify the position of an obvious and visible structural anomaly from prior transmural uterine surgery such as a Cesarean Scar Defect to confirm that it does not present with thin myometrium located within the uterine cavity where thermal endometrial ablation will be performed. If a structural anomaly is found within the uterine cavity, then best clinical judgment should be used before performing thermal endometrial ablation.

Subjects with and without Myomas

There were 29/155 (19%) of subjects with myomas that did not obstruct access to the uterine cavity or prevent uterine distension. There were no device or procedure-related serious adverse events reported in these subjects.

The recording of myoma type was done according to the International Federation of Gynecology and Obstetrics (FIGO) classification system.

Subjects in the ITT analysis cohort had submucosal (type 2), intramural (types 3 and 4) and/or subserosal myomas (types 5 and 6). Myoma size ranged from 0.6-6.0 cm. Data for the number, size and type of myomas in subjects with PBLAC ≤75 are reflected in **Table 10a**.

Table 10a. Number, Size and Types of Myomas in Subjects with PBLAC ≤75

FIGO Classification Number	Classification Name	Myomas N	Patients N*	Size Range of Myomas (cm)

2	Submucosal ≥50% Intramural	2	2	0.8 - 1.3
3	Contacts Endometrium 100% Intramural	4	4	2.1 - 3.7
4	Intramural	12	7	0.8 - 3.3
5	Subserosal ≥50% Intramural	3	3	2.5 - 4.0
6	Subserosal <50% Intramural	6	6	1.1 - 6.0
TOTAL		27	19*	

* There were a total of 19 subjects with myomas who met the 12 month effectiveness endpoint. Four subjects had more than one myoma / type.

At the 12-month follow-up visit, there were 65.5% (19/29) of subjects with myomas versus 81.7% (103/126) without myomas who met the study success criteria of PBLAC ≤75. These data show that no safety issues were identified and that approximately two-thirds of subjects with myomas were successfully treated. Data are presented below in **Table 10b**.

Table 10b. 12-month PBLAC ≤75 in Subjects with and without Myomas

	ITT
With Myomas	19/29 (65.5%)
Without Myomas	103/126 (81.7%)
All Subjects	122/155 (78.7%)

Subjects with Uterine Length 10 cm to 12 cm

There were 74.1% (115/155) of subjects who had a uterine length 6 cm to 9.9 cm and 25.8% (40/155) with uterine length 10 cm to 12 cm. There were no device or procedure-related serious adverse events reported in these subjects.

In the AEGEA subpopulation of subjects with uterine length 10 cm to 12 cm, 77.5% (31/40) in the ITT analysis cohort had a 12-month PBLAC score of ≤75. This represents a significant portion of the study population with large cavities who were successfully treated with the AEGEA Vapor

System. Both aggregate and detailed data of uterine lengths with the associated success rates are presented below in **Tables 11** and **12**.

Table 11. PBLAC ≤75 in Subjects with Uterine Lengths 6 cm to 9.9 cm and 10 cm to 12 cm

Uterine Length (cm)	PBLAC score ≤75
6 cm -9.9 cm	91/115 (79%)
10 cm – 12 cm	31/40 (77.5%)

Table 11. Uterine Length Subgroups

Uterine Length (cm)	PBLAC score ≤75 N/N (%)
6-6.9	2/5 (40%)
7-7.9	11/12 (92%)
8-8.9	28/39 (72%)
9-9.9	50/59 (85%)
10-10.9	21/29 (72%)
11-11.9	9/10 (90%)
12	1/1 (100%)

Subjects with Essure® Permanent Birth Control

There were 5% (8/155) of subjects in the ITT cohort who were relying on Essure® Permanent Birth Control inserts for contraception at the time of study screening. There were no serious device or procedure related adverse events in these subjects. At the 12-month follow-up visit, there were 75% (6/8) of subjects who met the study's success criteria with a PBLAC score ≤75.

Post-operative pain using a Numerical Rating Scale

At 24 hours and two-weeks following endometrial ablation, subjects were asked to report their pain using a Numeric Rating Scale with 0 representing no pain and 10 representing unbearable pain. These data are summarized below in **Table 13**. At 24 hours post-op, the mean pain rating was 3.8. At two weeks post-op, the mean pain rating reduced to 1.5. To put these pain scores into context, subjects were asked to rate their typical pain with menses prior to having the ablation procedure. The mean rating in response to this baseline question was 4.6, which

represents worse pain than the mean value reported at 24 hours post-op.

Table 13. Post-operative Pain

Post-operative Pain	24 Hours N=141	2-Weeks N=141
Mean ±SD (median)	3.8 ±.2.8 (4.0)	1.5 ±.1.9 (1.0)
Range (min, max)	(0, 10)	(0, 8)
95% CI	(3.3, 4.2)	(1.2, 1.9)

Return to Work and Normal Daily Activities

At the two-week follow-up visit, subjects were asked to report when they returned to work either inside or outside the home and when they returned to normal daily activities. These data are summarized below in **Table 14**.

Table 14. Return to Work and Normal Daily Activities

2 Week Follow-up	Return to Work N=136	Return to Normal Daily Activities N=141
Mean ±SD (median)	1.9 ±.1.7 (1.0)	2.5 ±.2.6 (2.0)
Range (min, max)	(0, 10)	(0, 14)
95% CI	(1.6, 2.1)	(2.0, 2.9)
Returned <1 Day	12 (8.8%)	15 (10.6%)
Returned in 1 Day	63 (46.3%)	55 (39.0%)
Returned in 2 Days	32 (23.5%)	31 (22.0%)
Returned in 3 Days	14 (10.3%	8 (5.7%)

Dysmenorrhea (pain during menstruation)

At baseline and follow-up, the Aberdeen Menorrhagia Severity Scale was used to ask subjects to rate on average, over the past three months, if their periods had been associated with any pain. The results are shown in **Table 15** below.

Table 15. Dysmenorrhea at Baseline versus 12-Month Follow-up

Outcome	Baseline N=141	Month 12 N=141
Dysmenorrhea	121 (85.8%)	48 (34.0%)

95% CI	(79.0%, 91.1%)	(26.3%, 42.5%)

A shift analysis was also completed to evaluate subjects who had improved, were unchanged or had worsened pain with menses when comparing baseline to 12 month follow-up. The results are shown below in **Table 16**.

Table 16. Dysmenorrhea Shift: Baseline versus 12-Month Follow-up

Shift in Outcome	N = 112
Improved	81 (72.3%)
Unchanged	26 (23.2%)
Worsened	5 (4.5%)

Impact on Sex Life

At baseline and follow-up, the Aberdeen Menorrhagia Severity Scale was used to ask subjects to rate on average, over the past three months, if their sex life had been affected by heavy periods. Results are shown below in **Table 17**.

Table 17. Impact on Sex Life: Baseline vs. 12-Month Follow-up

Outcome	Baseline N=141	Month 12 N=112
Impact on Sex Life	112 (79.4%)	6 (5.4%)
95% CI	71.8%, 85.8%	2.0%, 11.3%

A shift analysis was also completed to evaluate subjects whose sex life had improved, was unchanged or had a worsened due to heavy periods. Results are shown below in **Table 18**.

Table 18. Impact on Sex Life Shift: Baseline vs. 12-Month

Shift in Outcome	N = 91
Improved	77 (84.6%)
Unchanged	13 (14.3%)
Worsened	1 (1.1%)

10.0 PATIENT SELECTION

Menorrhagia can be caused by a variety of underlying problems, including, but not limited to: endometrial cancer, myomas, polyps, drugs and endometrial ovulatory dysfunction[4]. Patients always should be screened and evaluated to determine the cause of excessive uterine bleeding before any treatment option is initiated. Consult medical literature relative to various endometrial ablation techniques, indications, contraindications, complications and hazards prior to the performance of any endometrial ablation procedure.

11.0 PATIENT COUNSELING

As with any procedure, the physician needs to discuss with the patient the risks, benefits and alternatives to endometrial ablation. Patients should be informed that pregnancy is not likely after ablation, but it can happen. If it does, the risk of miscarriage and other problems are greatly increased. If a woman still wants to become pregnant, she should not have this procedure. Women who have endometrial ablation should use birth control until after menopause.[5]

Vaginal discharge is typically experienced during the first few weeks following ablation and may last as long as several weeks. Generally, the discharge is described as bloody during the first few days; serosanguinous (thin, watery discharge, yellow to red in color) by approximately one week; then profuse and watery thereafter. Any unusual or foul-smelling discharge should be reported to the physician immediately. Other post-procedural complications include cramping/pelvic pain, nausea and vomiting.

Uterine perforation should be considered in the differential diagnosis of any post-operative patient complaining of acute abdominal pain, fever, shortness of breath, dizziness, hypotension or any other symptom that may be associated with uterine perforation with or without damage to the adjacent organs of the abdominal cavity. Patients should be counseled that any such symptoms should be immediately reported to their physician.

ENDOMETRIAL THINNING OF PATIENT

The lining of the uterus should be thinned prior to endometrial ablation with the AEGEA Vapor System. This can be accomplished by timing the menstrual cycle to the early proliferative phase, administering pretreatment drugs such as oral contraceptives, progestin (e.g., Norethindrone Acetate or Provera), or GnRH agonists.

PRE- AND POST-OPERATIVE USE OF NSAIDS

It is recommended that a non-steroidal anti-inflammatory drug (NSAID) be given at least one hour prior to treatment and continued post-operatively, as necessary, to reduce intra-operative

---

[4] ACOG Practice Bulletin No. 128 July 2012, Diagnosis of Abnormal Uterine Bleeding in Reproductive-Age Women.
[5] http://www.acog.org/Patients/FAQs/Endometrial-Ablation

and post-operative uterine cramping.

12.0 CLINICAL USE CHECKLIST

Prior to use of the AEGEA Vapor System on a patient, the physician should complete the following checklist to better ensure a safe and effective use of the system. Note that this is not a comprehensive list, but an attempt to cover some of the key issues before a physician uses the AEGEA Vapor System.

The physician must:

Along with ancillary personnel, thoroughly read and understand the Instructions For Use, AEGEA Vapor Generator Operators Manual, Indications, Contraindications, Warnings, Technical Warnings and Precautions supplied with the AEGEA Vapor System;

Be able to maintain proper placement of the Vapor Probe and be able to maintain control of the Vapor Probe throughout the procedure;

Neither advance nor withdraw the Vapor Probe into or out of the uterine cavity once the Uterine Cavity Integrity Test and Device Lumen Patency Test have successfully completed and vapor delivery is initiated, until prompted to remove the Vapor Probe from the patient;

Be aware of appropriate sequence of actions to stop vapor delivery, resolve and/or continue treatment, in the event the AEGEA Vapor System stops vapor delivery during treatment.

13.0 HOW SUPPLIED

The Vapor Probe is supplied STERILE using an ethylene oxide (EO) process. The Supply and Drain Accessory is supplied Non-sterile. The Vapor Probe and Supply and Drain Accessory are packaged together in a carton containing these Instructions for Use, and two sealed pouches. One sealed pouch contains the sterile Vapor Probe. The second pouch contains the non-sterile Supply and Drain Accessory. Store in a cool, dry, dark place. Do not use if package is damaged or opened. See product labeling for expiration date. Do not use product beyond its expiration date.

14.0 INSTRUCTIONS FOR USE

Please read all instructions, cautions, and warnings prior to use.

INSPECT DISPOSABLE DEVICE PACKAGING - DO NOT USE STERILE OR NON-STERILE SINGLE-PATIENT USE DISPOSABLE DEVICES IF THE PACKAGING OR DEVICE APPEARS TO BE DAMAGED OR THERE IS EVIDENCE OF TAMPERING.

Refer to the Operator’s Manual that accompanies the AEGEA Vapor Generator for proper set up

and use.

Set-up

The following items are required when using the AEGEA Vapor System:

- One AEGEA Vapor System Procedure Kit that includes:
    - One sterile, single-use AEGEA Vapor Probe disposable device
    - One non-sterile AEGEA Supply and Drain Accessory
- One AEGEA Vapor Generator and Vapor Generator Accessory Kit (with power cord, IV Pole, Laser Level and assembly hardware)

For proper operation of the system, the following hospital supplies are also required:

- 2L bag of Sterile Water for Irrigation, USP (water supply to generate water vapor)
- 1L bag of 0.9% Normal Saline (for use with the Uterine Cavity Integrity Test) – It is recommended that Normal Saline should be supplied at body temperature.
- Patient fluid/waste collection container
- White petroleum jelly
- Uterine sound
- 10 inch tenaculum, straight-arm with ratchet
- Speculum

Patient Preparation

1. Prepare the patient for anesthesia.
2. Place the patient in the dorsal lithotomy position, which is the same as for hysteroscopy or other endometrial ablation procedures. Prepare and drape the patient for endometrial ablation.
3. Induce anesthesia according to standard practice.
4. Perform bimanual examination. Evaluate the patient for severe anteversion or retroversion.
5. Grasp the cervix with a tenaculum at the 12 o’clock position.

Procedure Preparation (Refer to AEGEA Vapor Generator Operator's Manual for complete instructions and diagrams)

1. Press the front panel power switch to turn on the AEGEA Vapor Generator. Verify that the power-on self-test successfully completes.

2. Follow on-screen prompts by the AEGEA Vapor Generator:

    a. Available options will be marked with an arrow.

    b. When a task is completed, the arrow will be replaced with a green check mark.

    c. Progression to the next screen is enabled when the green arrow is illuminated in the right lower corner. Press the green arrow to advance to the next screen.

3. Supply and Drain Accessory attachment to the Vapor Generator:

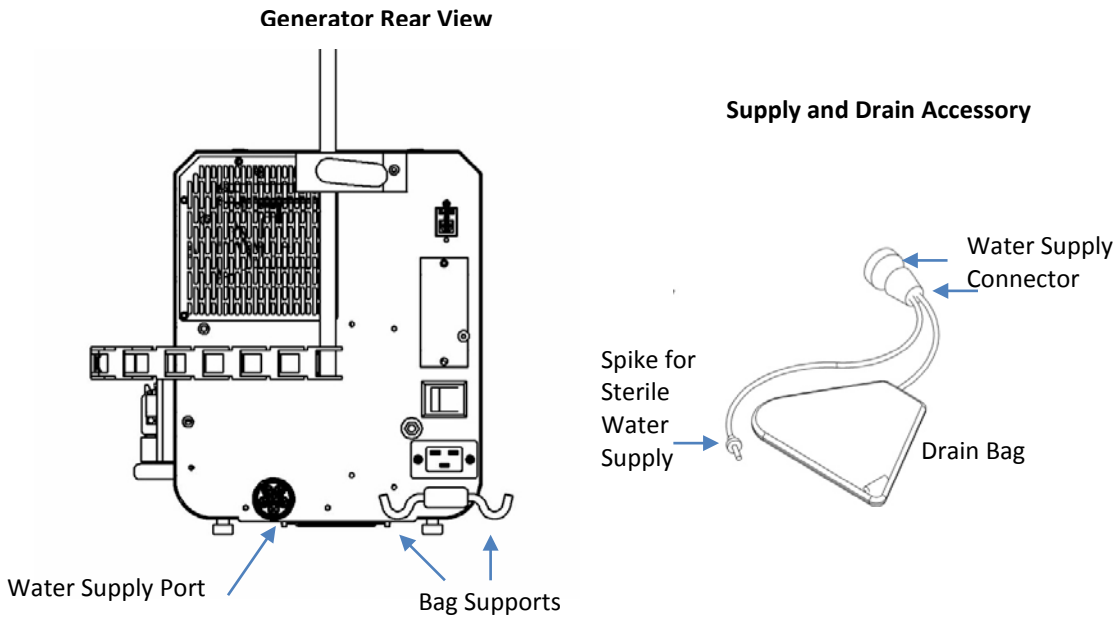

Attach the connector from the AEGEA Supply and Drain Accessory set (non-sterile) to the water supply port on the rear panel of the Vapor Generator.

    a. Hang the drain bag using its hooks onto the Vapor Generator's bag supports.

    b. Hang the hospital-provided Sterile Water for Irrigation, USP bag (sterile bag) from the Vapor Generator's bag supports.

    c. Attach to the sterile water bag using the spike on the end of the Supply and Drain Accessory set.

d. Verify that the blue pinch clamp is open to allow the Vapor Generator to fill.

4. Follow the on-screen prompts to prepare the Vapor Generator. The Vapor Probe Sensor Connector may be connected while the Sterilization Cycle is in progress. The Vapor Probe's Vapor Connector can only be connected once the Sterilization Cycle is complete.

5. When the Sterilization Cycle is complete, the onscreen "Sterilization in Progress" will disappear from the left lower corner of the Vapor Generator screen, and the option to connect the Vapor Connector will become available.

6. Remove the AEGEA Vapor Probe from its packaging using aseptic technique.

7. Attach the Vapor Probe's Sensor Connector to the Vapor Generator and align the tab at the 12 o'clock position.

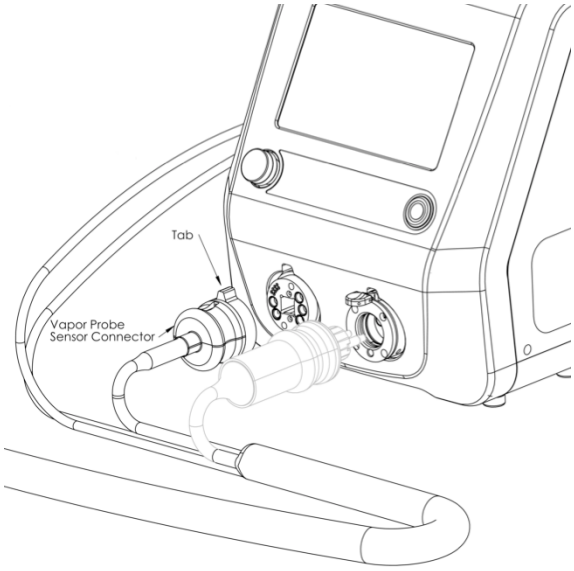

8. Attach the Vapor Probe integrity cartridge to the Vapor Generator.

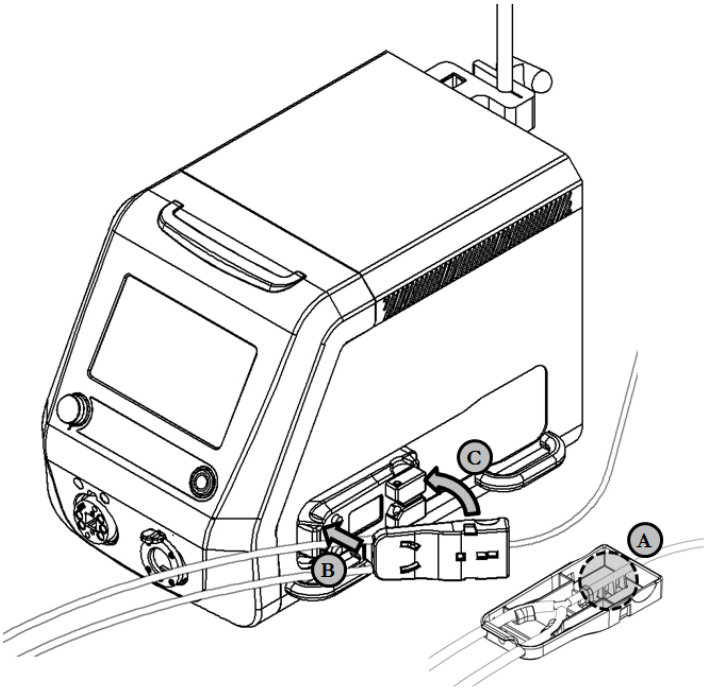

a. Hang a bag of saline from the top of the Vapor Generator's IV Pole.

b. Apply a small amount of petroleum jelly to the Vapor Probe tubing in region identified as "A".

c. Slide tab on Integrity Cartridge into slot ("B") on Vapor Generator.

d. Swing Integrity Cartridge until it "snaps" into place ("C").

e. Use the spike at the end of the Vapor Probe's integrity test tubing to connect to the saline bag. Ensure that the blue pinch clamp near the spike is open and squeeze the drip chamber on the tubing to fill halfway with saline.

9. Attach the Vapor Probe's Vapor Connector to the Vapor Generator with the alignment pin at the 6 o'clock position.

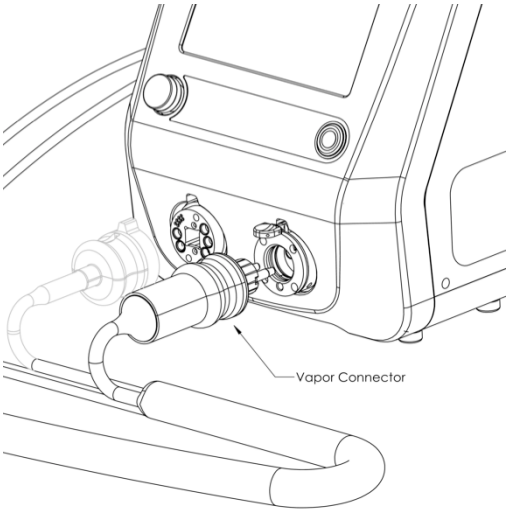

10. Follow the Vapor Generator on-screen prompts to test the Vapor Probe. If the Vapor Probe test is unsuccessful, the Vapor Generator will indicate an alert notification. Follow the on-screen instructions to resolve the issue, or press the red Interrupt Button to disconnect and replace the Vapor Probe. Please refer to the AEGEA Vapor Generator Operator's Manual.

    a. **WARNING**: During the Vapor Probe test, the three balloons on the shaft of the Vapor Probe will inflate. Visually confirm the inflation of all three balloons. If one of the balloons does not inflate, do not proceed. Press the red Interrupt Button to disconnect and replace the Vapor Probe.

11. After the patient is positioned for the procedure, set the saline bag height by adjusting the Vapor Generator's rear mounted IV Pole so that the Laser Level is aligned with the patient's uterus. Turn off the laser once alignment is complete.

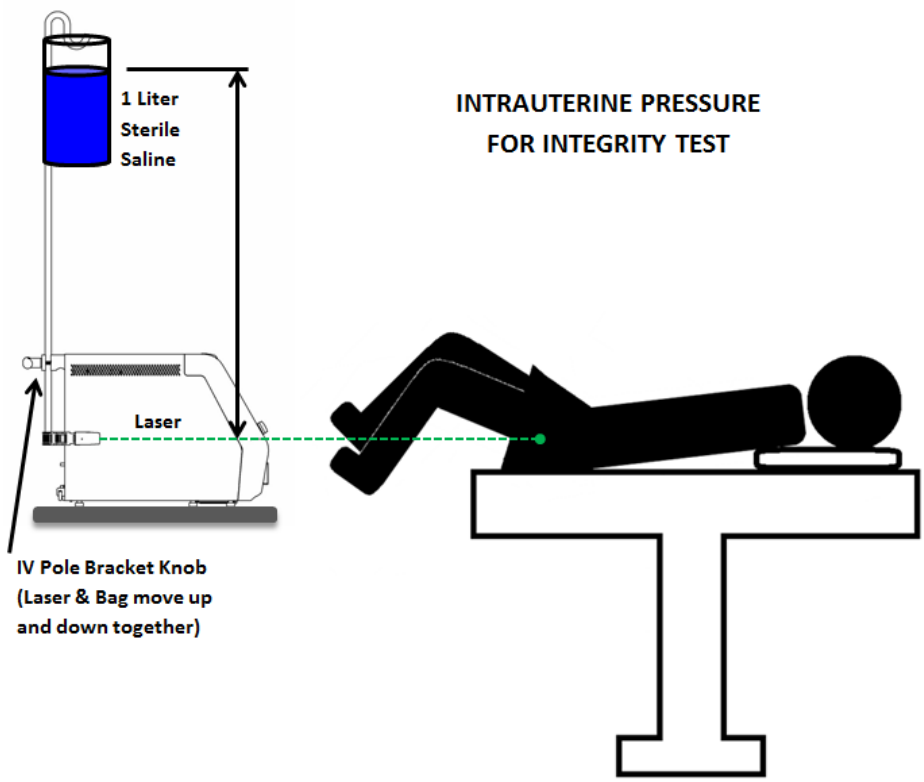

12. Remove the protective tip cover from the Vapor Probe shaft.

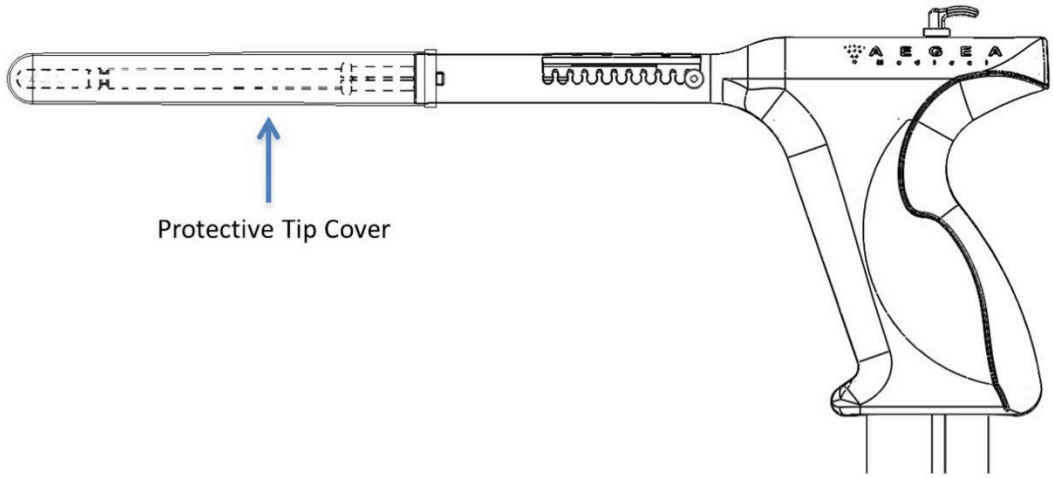

13. Measure the length of the uterus from the fundus to the external cervical ostium using a sound device. Adjust the Cervical Slide Collar on the Vapor Probe shaft by aligning the

Slide Collar Adjustment Lock with the numbered indicia that corresponds to the measured uterine length. The example below is for the adjustments made for a measured uterine length of 9cm. Adjustments to the Slide Collar Adjustment Lock setting may be made to aid with placing the internal balloon beyond the internal cervical ostium.

a. **WARNING:** Use caution not to perforate the uterine wall when sounding or inserting the Vapor Probe.

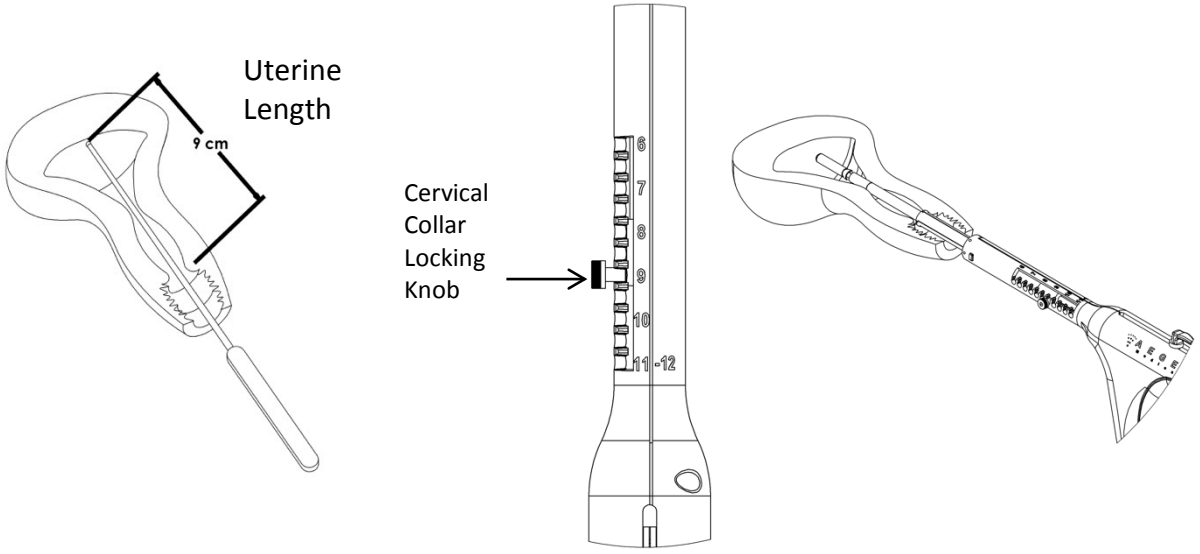

14. **WARNING:** Place the outlet end of the Vapor Probe's outflow line tubing in the waste collection container (not provided) that is intended to collect vapor outflow. Do not place the outlet end of the vapor outflow line into the upper portion of an under-buttock drape due to the risk of severe burn to the patient. Ensure the outlet end of the vapor outflow line is not in submerged in fluid at any time during the procedure.

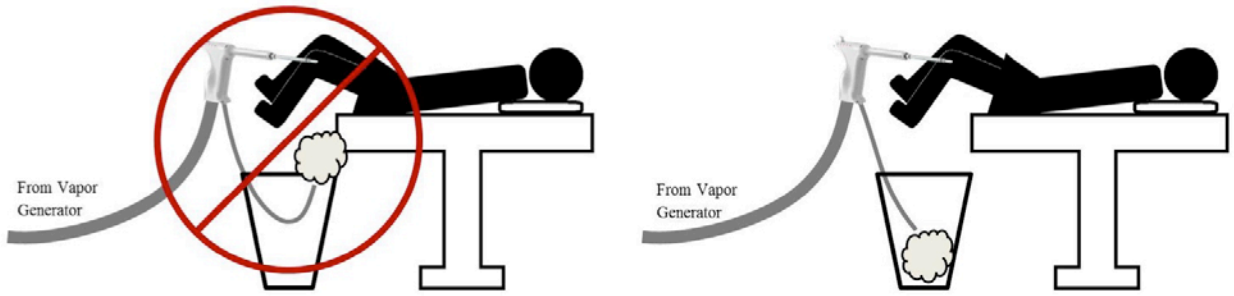

Place outlet end of the Vapor Probe's outflow line in the waste collection container (not provided) that is intended to collect vapor outflow. Ensure that the outlet end of the vapor outflow line is not submerged in fluid at any time during the procedure.

Proper placement

15. Follow the Vapor Generator on-screen prompts to prepare for Vapor Probe insertion by starting saline flow. Saline will flow through the Vapor Probe.

16. Insert the Vapor Probe into the uterus until the cervical collar reaches the exo-cervix. Resistance may be felt or advancement of the device may be prevented as the cervical collar touches the exo-cervix.

    a. **NOTE:** If the Vapor Probe is difficult to insert into the cervical canal, use clinical judgment to determine whether or not dilation is required.

    b. **WARNING**: If a uterine perforation is suspected, the procedure should be terminated immediately. The patient should be evaluated for perforation prior to discharge.

17. Follow the Vapor Generator on-screen instructions to inflate the internal balloon. Gently apply light traction to confirm the device is positioned at the internal cervical ostium.

18. Follow the Vapor Generator on-screen prompts to inflate the external and middle balloons. The cervical slide collar will expand with inflation of the external balloon.

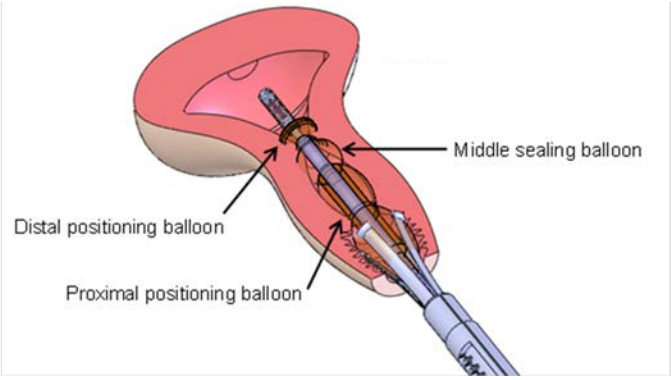

19. It is likely that the device will move caudally until the internal balloon seats at the base of the lower uterine cavity. The Vapor Probe position does not need to be (and should not be) adjusted based on this movement.

    a. **NOTE:** At any time until ablation treatment starts, the “Deflate/Return” button on the Vapor Generator touch screen may be pressed to deflate the balloons for removal and/or reinsertion.

20. Place the tenaculum onto the Tenaculum Stabilizer. Slide the Tenaculum Stabilizer post backward until it touches the “T” ratchet of the tenaculum. Do not push the device forward or engage the post too tightly. Do not move or reposition the tenaculum on the cervix after the Vapor Probe has been placed and balloons have been inflated.

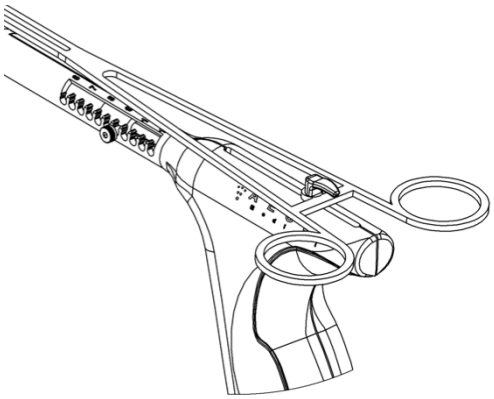

21. Lock the Tenaculum Stabilizer in place. The device is now in position and ready for the Uterine Cavity Integrity Test.

22. The Uterine Cavity Integrity Test will start automatically once the balloons are inflated. If the Uterine Cavity Integrity Test is unsuccessful, the Vapor Generator will display a message requiring a re-test before proceeding.

    a. Press “Re-test” on the Vapor Generator touch screen to repeat the test; or

    b. Press “Increase Middle Balloon Pressure” and re-test, if it is suspected that there is a slight leak past the balloon seal (this option can only be engaged once); or

    c. Press “Deflate/Return” to deflate the balloons and remove the device. This will allow the device to be repositioned.

23. Upon successful completion of the Uterine Cavity Integrity Test, the Vapor Generator will automatically start the Device Lumen Patency Test.

24. If the Device Lumen Patency Test is unsuccessful, the Vapor Generator will display a message requiring a re-test before proceeding.

    a. Press “Re-test” on the Vapor Generator touch screen to repeat the test sequence; or

    b. Press “Deflate/Return” to deflate the balloons and remove the device. This will allow the device to be repositioned. The Uterine Cavity Integrity Test will also be repeated prior to repeating the Device Lumen Patency Test.

25. Upon successful completion of the Uterine Cavity Integrity Test and Device Lumen Patency Test consecutively, the Vapor Generator will be ready to begin vapor delivery.

a. **NOTE:** The Vapor Generator will not start vapor delivery until both the Uterine Cavity Integrity Test and Device Lumen Patency Test are successfully completed consecutively. There is no bypass or override of this requirement.

26. Press the "Start" button on the Vapor Generator touch screen to begin vapor delivery for endometrial ablation. During treatment, the Vapor Generator display will show the time remaining for vapor delivery.

27. If an alert notification occurs, refer to the instructions on the Vapor Generator touch screen and/or refer to the AEGEA Vapor Generator Operator's Manual, Section 5: Troubleshooting, Table 2, Alert Codes 101-242 and Table 3, Alert Codes 501-528.

28. Vapor delivery can be interrupted by pressing the red Interrupt Button on the front panel of the Vapor Generator. Once pressed, vapor delivery will terminate. Twist the red knob clockwise to release the Interrupt Button and to receive on-screen options. If vapor delivery was interrupted within the first 20 seconds of vapor delivery (saline flush period), the procedure may be continued. The Uterine Cavity Integrity Test and Device Lumen Patency Test must be repeated to allow vapor to be delivered again. If the Interrupt Button is pressed after the end of saline flush (during the 120 seconds of vapor treatment), then vapor delivery will be terminated.

29. Once vapor treatment has ended, balloons will automatically deflate.

    a. If vapor delivery did not complete due to an alert notification or use of the Interrupt Button <u>during</u> the saline flush period, the procedure can be attempted again with a new Vapor Probe.

    b. If vapor delivery did not complete due to an alert notification or use of the Interrupt Button <u>after</u> the saline flush period, a repeat vapor delivery must not be attempted in the same operative setting. A repeat ablation has not been studied and the effects are unknown.

30. The Vapor Generator will display a message to indicate when to remove the Vapor Probe. Detach the tenaculum from the Tenaculum Stabilizer, and remove the Vapor Probe from the uterus.

31. The Vapor Generator will display a message to allow either preparation of the Vapor Generator for use with another patient, or to drain the Vapor Generator in preparation to shut down.

32. To drain and shut down, disconnect the Vapor Probe sensor and vapor connectors from the front of the Vapor Generator. Remove the saline bag from the IV pole and disconnect the Vapor Probe integrity cartridge from the side of the Vapor Generator.

33. Follow the Vapor Generator on-screen instructions to properly shut down the system.

15.0 PARTS LIST ORDERING INFORMATION AND RELATED PARTS AND ACCESSORIES

Product Number Description

Description	Model Number
AEGEA Vapor System	GEA-SYS-12-0400
AEGEA Vapor Probe Procedure Kit	DDK-12-040
AEGEA Vapor Generator	GEN-12-020
AEGEA Vapor Generator Accessory Kit	GEA-GEN-AX-05

16.0 SERVICE REPRESENTATIVES

Should the AEGEA Vapor System become inoperable, contact AEGEA Medical Inc. for instructions and a Return Goods Authorization number (RGA #). Clean and repackage the System components and return them to AEGEA Medical for repair or servicing.

NOTE: Any AEGEA Vapor System-related incident or problem, which is believed to represent a safety issue, should be reported to AEGEA Medical Inc. immediately.

For service, technical support, or reorder information, contact:

AEGEA Medical Inc.
2686 Middlefield Road, Suite A
Redwood City, CA 94063
USA
Phone: +1 (650) 701-1125
Fax: +1 (650) 701-1126

The AEGEA Vapor Probe Procedure Kit is manufactured by AEGEA Medical, Inc.

The AEGEA Vapor Generator is manufactured for AEGEA Medical, Inc.

17.0 SYMBOLS KEY

	Caution
	Refer to Instruction Manual/Booklet
LOT	Lot Number
REF	Catalog Number
SN	Serial Number
	Do Not Reuse
STERILE EO	Sterilized by ETO
NON STERILE	Non-Sterile
	Use By Date
	Date of Manufacture
	Manufacturer
	Off (Power: Disconnect from Mains)
	On (Power: Connection to Mains)
	Power On/Off
	Alternating Current
	Shock Protection, Type: B

	Protective Earth Terminal
LASER	Alignment Laser Power Switch
	Supply & Drain Accessory Port
	Temperature Limit
	Humidity Limitation
	Atmospheric Pressure Limitation
	Consult Instructions for Use
	Do Not Use if Package is Damaged
	Keep Away from Sunlight
	Keep Dry
CAUTION LASER RADIATION - DO NOT STARE INTO BEAM	Laser Level Warning
	Do Not Dispose
CAUTION Hot! Do not place on patient	Delivery and Outflow Conduit Warning
IP21	Protects persons against access to hazardous parts with fingers; protection against vertically falling water drops