FoundationOne CDx™
Technical Information

Foundation Medicine, Inc.
150 Second Street, Cambridge, MA 02141
Phone: 617.418.2200

Intended Use

FoundationOne CDx™ (F1CDx™) is a next generation sequencing based *in vitro* diagnostic device for detection of substitutions, insertion and deletion alterations (indels), and copy number alterations (CNAs) in 324 genes and select gene rearrangements, as well as genomic signatures including microsatellite instability (MSI) and tumor mutational burden (TMB) using DNA isolated from formalin-fixed paraffin embedded (FFPE) tumor tissue specimens. The test is intended as a companion diagnostic to identify patients who may benefit from treatment with the targeted therapies listed in Table 1 in accordance with the approved therapeutic product labeling. Additionally, F1CDx is intended to provide tumor mutation profiling to be used by qualified health care professionals in accordance with professional guidelines in oncology for patients with solid malignant neoplasms. The F1CDx assay is a single-site assay performed at Foundation Medicine, Inc.

Table 1. Companion diagnostic indications

Indication	Biomarker	Therapy
Non-small cell lung cancer (NSCLC)	*EGFR* exon 19 deletions and *EGFR* exon 21 L858R alterations	Gilotrif® (afatinib), Iressa® (gefitinib), or Tarceva® (erlotinib)
	EGFR exon 20 T790M alterations	Tagrisso® (osimertinib)
	ALK rearrangements	Alecensa® (alectinib), X*ALK*ori® (crizotinib), or Zykadia® (ceritinib)
	BRAF V600E	Tafinlar® (dabrafenib) in combination with Mekinist® (trametinib)
Melanoma	*BRAF* V600E	Tafinlar® (dabrafenib) or Zelboraf® (vemurafenib)
	BRAF V600E and V600K	Mekinist® (trametinib) or Cotellic® (cobimetinib) in combination with Zelboraf® (vemurafenib)
Breast cancer	*ERBB2* (HER2) amplification	Herceptin® (trastuzumab), Kadcyla® (ado-trastuzumab-emtansine), or Perjeta® (pertuzumab)
Colorectal cancer	*KRAS* wild-type (absence of mutations in codons 12 and 13)	Erbitux® (cetuximab)
	KRAS wild-type (absence of mutations in exons 2, 3, and 4) and *NRAS* wild type (absence of mutations in exons 2, 3, and 4)	Vectibix® (panitumumab)
Ovarian cancer	*BRCA1/2* alterations	Rubraca® (rucaparib)

Contraindication

There are no known contraindications.

Warnings and Precautions

- Alterations reported may include somatic (not inherited) or germline (inherited) alterations; however, the test does not distinguish between germline and somatic alterations. The test does not provide information about susceptibility.
- Biopsy may pose a risk to the patient when archival tissue is not available for use with the assay. The patient's physician should determine whether the patient is a candidate for biopsy.
- Reflex testing to an alternative FDA approved companion diagnostic should be performed for patients who have an *ERBB2* amplification result detected with copy number equal to 4 (baseline ploidy of tumor +2) for confirmatory testing. While this result is considered negative by F1CDx, in a clinical concordance study with an FDA approved FISH test, 70% (7 out of 10 samples) were positive, and 30% (3 out 10 samples) were negative by the FISH test with an average ratio of 2.3. The frequency of *ERBB2* copy number 4 in breast cancer is estimated to be approximately 2%[1].

  [1]Multiple references listed in https://www.mycancergenome.org/content/disease/breast-cancer/*ERBB2*/238/) report the frequency of HER2 overexpression as 20% in breast cancer. Based on the F1CDx HER2 CDx concordance study, approximately 10% of HER2 amplified samples had copy number 4. Thus, total frequency is conservatively estimated to be approximately 2%.

Limitations

- For *in vitro* diagnostic use.
- For prescription use only. This test must be ordered by a qualified medical professional in accordance with clinical laboratory regulations.
- Genomic findings other than those listed in Table 1 of the intended use are not prescriptive or conclusive for labeled use of any specific therapeutic product.
- A negative result does not rule out the presence of a mutation below the limits of detection of the assay.
- Samples with <25% tumor may have decreased sensitivity for the detection of CNAs including *ERBB2*.
- Clinical performance of Tagrisso® (osimertinib) in patients with an *EGFR* exon 20 T790M mutation detected with an allele fraction <5% is ongoing and has not been established.
- Concordance with other validated methods for CNA (with the exception of *ERBB2*) and gene rearrangement (with the exception of *ALK*) detection has not been demonstrated and will be provided in the post-market setting. Confirmatory testing using a clinically validated assay should be performed for all CNAs and rearrangements not associated with CDx claims noted in Table 1 of the Intended Use, but used for clinical decision making.
- The MSI-H/MSS designation by FMI F1CDx test is based on genome wide analysis of 95 microsatellite loci and not based on the 5 or 7 MSI loci described in current clinical practice guidelines. Refer <insert link to SSED> for additional details on methodology. The threshold for MSI-H/MSS was determined by analytical concordance to comparator assays (IHC and PCR) using uterine, cecum and colorectal cancer FFPE tissue. The clinical validity of the qualitative MSI designation has not been established.
- TMB by F1CDx is defined based on counting the total number of all synonymous and non-synonymous variants present at 5% allele frequency or greater (after filtering) and reported as mutations per megabase (mut/Mb) unit. The clinical validity of TMB defined by this panel has not been established.
- Decisions on patient care and treatment must be based on the independent medical judgment of the treating physician, taking into consideration all applicable information concerning the patient's condition, such as patient and family history, physical examinations, information from other diagnostic tests, and patient preferences, in accordance with the standard of care in a given community.
- The test is intended to be performed on specific serial number-controlled instruments by Foundation Medicine, Inc.

Test Principle

FoundationOne CDx™ (F1CDx) is performed exclusively as a laboratory service using DNA extracted from formalin-fixed, paraffin-embedded (FFPE) tumor samples. The assay employs a single DNA extraction method from routine FFPE biopsy or surgical resection specimens, 50-1000 ng of which will undergo whole-genome

shotgun library construction and hybridization-based capture of all coding exons from 309 cancer-related genes, one promoter region, one non-coding (ncRNA), and select intronic regions from 34 commonly rearranged genes, 21 of which also include the coding exons (refer to Table 2 and Table 3 for complete list of genes included in F1CDx. In total, the assay detects alterations in a total of 324 genes. Using the Illumina® HiSeq 4000 platform, hybrid capture–selected libraries are sequenced to high uniform depth (targeting >500X median coverage with >99% of exons at coverage >100X). Sequence data is then processed using a customized analysis pipeline designed to detect all classes of genomic alterations, including base substitutions, indels, copy number alterations (amplifications and homozygous gene deletions), and selected genomic rearrangements (e.g., gene fusions). Additionally, genomic signatures including microsatellite instability (MSI) and tumor mutational burden (TMB) are reported.

Table 2. Genes with full coding exonic regions included in FoundationOne CDx™ for the detection of substitutions, insertions and deletions (indels), and copy number alterations (CNAs).

ABL1	*BRAF*	*CDKN1A*	*EPHA3*	*FGFR4*	*IKZF1*	*MCL1*	*NKX2-1*	*PMS2*	*RNF43*	*TET2*
ACVR1B	*BRCA1*	*CDKN1B*	*EPHB1*	*FH*	*INPP4B*	*MDM2*	*NOTCH1*	*POLD1*	*ROS1*	*TGFBR2*
AKT1	*BRCA2*	*CDKN2A*	*EPHB4*	*FLCN*	*IRF2*	*MDM4*	*NOTCH2*	*POLE*	*RPTOR*	*TIPARP*
AKT2	*BRD4*	*CDKN2B*	*ERBB2*	*FLT1*	*IRF4*	*MED12*	*NOTCH3*	*PPARG*	*SDHA*	*TNFAIP3*
AKT3	*BRIP1*	*CDKN2C*	*ERBB3*	*FLT3*	*IRS2*	*MEF2B*	*NPM1*	*PPP2R1A*	*SDHB*	*TNFRSF14*
ALK	*BTG1*	*CEBPA*	*ERBB4*	*FOXL2*	*JAK1*	*MEN1*	*NRAS*	*PPP2R2A*	*SDHC*	*TP53*
ALOX12B	*BTG2*	*CHEK1*	*ERCC4*	*FUBP1*	*JAK2*	*MERTK*	*NT5C2*	*PRDM1*	*SDHD*	*TSC1*
AMER1	*BTK*	*CHEK2*	*ERG*	*GABRA6*	*JAK3*	*MET*	*NTRK1*	*PRKAR1A*	*SETD2*	*TSC2*
APC	*C11orf30*	*CIC*	*ERRFI1*	*GATA3*	*JUN*	*MITF*	*NTRK2*	*PRKCI*	*SF3B1*	*TYRO3*
AR	*CALR*	*CREBBP*	*ESR1*	*GATA4*	*KDM5A*	*MKNK1*	*NTRK3*	*PTCH1*	*SGK1*	*U2AF1*
ARAF	*CARD11*	*CRKL*	*EZH2*	*GATA6*	*KDM5C*	*MLH1*	*P2RY8*	*PTEN*	*SMAD2*	*VEGFA*
ARFRP1	*CASP8*	*CSF1R*	*FAM46C*	*GID4 (C17orf39)*	*KDM6A*	*MPL*	*PALB2*	*PTPN11*	*SMAD4*	*VHL*
ARID1A	*CBFB*	*CSF3R*	*FANCA*	*GNA11*	*KDR*	*MRE11A*	*PARK2*	*PTPRO*	*SMARCA4*	*WHSC1*
ASXL1	*CBL*	*CTCF*	*FANCC*	*GNA13*	*KEAP1*	*MSH2*	*PARP1*	*QKI*	*SMARCB1*	*WHSC1L1*
ATM	*CCND1*	*CTNNA1*	*FANCG*	*GNAQ*	*KEL*	*MSH3*	*PARP2*	*RAC1*	*SMO*	*WT1*
ATR	*CCND2*	*CTNNB1*	*FANCL*	*GNAS*	*KIT*	*MSH6*	*PARP3*	*RAD21*	*SNCAIP*	*XPO1*
ATRX	*CCND3*	*CUL3*	*FAS*	*GRM3*	*KLHL6*	*MST1R*	*PAX5*	*RAD51*	*SOCS1*	*XRCC2*
AURKA	*CCNE1*	*CUL4A*	*FBXW7*	*GSK3B*	*KMT2A (MLL)*	*MTAP*	*PBRM1*	*RAD51B*	*SOX2*	*ZNF217*
AURKB	*CD22*	*CXCR4*	*FGF10*	*H3F3A*	*KMT2D (MLL2)*	*MTOR*	*PDCD1*	*RAD51C*	*SOX9*	*ZNF703*
AXIN1	*CD274*	*CYP17A1*	*FGF12*	*HDAC1*	*KRAS*	*MUTYH*	*PDCD1LG2*	*RAD51D*	*SPEN*	
AXL	*CD70*	*DAXX*	*FGF14*	*HGF*	*LTK*	*MYC*	*PDGFRA*	*RAD52*	*SPOP*	
BAP1	*CD79A*	*DDR1*	*FGF19*	*HNF1A*	*LYN*	*MYCL*	*PDGFRB*	*RAD54L*	*SRC*	
BARD1	*CD79B*	*DDR2*	*FGF23*	*HRAS*	*MAF*	*MYCN*	*PDK1*	*RAF1*	*STAG2*	
BCL2	*CDC73*	*DIS3*	*FGF3*	*HSD3B1*	*MAP2K1*	*MYD88*	*PIK3C2B*	*RARA*	*STAT3*	
BCL2L1	*CDH1*	*DNMT3A*	*FGF4*	*ID3*	*MAP2K2*	*NBN*	*PIK3C2G*	*RB1*	*STK11*	

BCL2L2	*CDK12*	*DOT1L*	*FGF6*	*IDH1*	*MAP2K4*	*NF1*	*PIK3CA*	*RBM10*	*SUFU*	
BCL6	*CDK4*	*EED*	*FGFR1*	*IDH2*	*MAP3K1*	*NF2*	*PIK3CB*	*REL*	*SYK*	
BCOR	*CDK6*	*EGFR*	*FGFR2*	*IGF1R*	*MAP3K13*	*NFE2L2*	*PIK3R1*	*RET*	*TBX3*	
BCORL1	*CDK8*	*EP300*	*FGFR3*	*IKBKE*	*MAPK1*	*NFKBIA*	*PIM1*	*RICTOR*	*TEK*	

Table 3. Genes with select intronic regions for the detection of gene rearrangements, one with 3'UTR, one gene with a promoter region and one ncRNA gene.

ALK *introns 18, 19*	*BRCA1* *introns 2, 7, 8, 12, 16, 19, 20*	*ETV4* *introns 5, 6*	EZR *introns 9- 11*	*KIT* *intron 16*	*MYC* *intron 1*	*NUTM1* *intron 1*	*RET* *introns 7-11*	*SLC34A2* *intron 4*
BCL2 *3'UTR*	*BRCA2* *intron 2*	*ETV5* *introns 6, 7*	*FGFR1* *intron 1, 5, 17*	*KMT2A (MLL)* *introns 6-11*	*NOTCH2* *intron 26*	*PDGFRA* *introns 7, 9, 11*	*ROS1* *introns 31-35*	*TERC* *ncRNA*
BCR *introns 8, 13, 14*	*CD74* *introns 6- 8*	*ETV6* *introns 5, 6*	*FGFR2* *intron 1, 17*	*MSH2* *intron 5*	*NTRK1* *introns 8-10*	*RAF1* *introns 4-8*	*RSPO2* *intron 1*	*TERT* Promoter
BRAF *introns 7- 10*	*EGFR* *introns 7, 15, 24-27*	*EWSR1* *introns 7-13*	*FGFR3* *intron 17*	*MYB* *intron 14*	*NTRK2* *Intron 12*	*RARA* *intron 2*	*SDC4* *intron 2*	*TMPRSS2* *introns 1- 3*

Summary and Explanation

FoundationOne CDx™ is a broad companion diagnostic (CDx) test for five tumor indications. In addition to use as a companion diagnostic, F1CDx provides cancer relevant alterations that may inform patient management in accordance with professional guidelines. Information generated by this test is an aid in the identification of patients who are most likely to benefit from associated therapeutic products as noted in Table 1 of the Intended Use.

The F1CDx platform employs whole-genome shotgun library construction and hybridization-based capture of DNA extracted from FFPE tumor tissue prior to uniform and deep sequencing on the Illumina® HiSeq 4000. Following sequencing, custom software is used to determine genomic variants including substitutions, insertion and deletion variants (indels), copy number alterations (CNAs), genomic rearrangements, microsatellite instability (MSI) and tumor mutational burden (TMB). The output of the test includes:

Category 1: Companion Diagnostic (CDx) Claims noted in Table 1 of the Intended Use

Category 2: Cancer Mutations with Evidence of Clinical Significance

Category 3: Cancer Mutations with Potential Clinical Significance

Genomic findings other than those listed in Table 1 of the intended use statement (i.e., Categories 2 and 3) are not prescriptive or conclusive for labeled use of any specific therapeutic product.

Test Kit Contents

The FoundationOne CDx™ (F1CDx) test includes a sample shipping kit, which is sent to ordering laboratories. The shipping kit contains the following components:

- Specimen Preparation Instructions and Shipping Instructions
- Return Shipping Label

All other reagents, materials and equipment needed to perform the assay are used exclusively in the Foundation Medicine laboratory. The F1CDx assay is intended to be performed with serial number-controlled instruments.

Sample Collection and Test Ordering

To order FoundationOne CDx™, the Test Requisition Form (TRF) included in the test kit must be fully completed and signed by the ordering physician or other authorized medical professional. Please refer to Specimen

Preparation Instructions and mailing instructions included in the test kit.

For more detailed information, including Performance Characteristics, please find the FDA Summary of Safety and Effectiveness Data at: [Insert link to SSED upon approval here]

1. Instruments

The FoundationOne CDx™ device is intended to be performed with the following instruments, as identified by specific serial numbers:

- Agilent Technologies Benchbot Workstation with Integrated Bravo Automated Liquid Handler
- Beckman Biomek NX^{P} Span-8 Liquid Handler
- Covaris LE220 Focused ultrasonicator
- Thermo Fisher Scientific KingFisher™ Flex with 96 Deep-well Head
- Illumina® cBot System
- Illumina® HiSeq 4000 System

2. Performance Characteristics

Performance characteristics were established using DNA derived from a wide range of FFPE tissue types; tissue types associated with CDx indications were included in each study. Table 4 below provides a summary of tissue types included in each study. Each study also included a broad range of representative alteration types for each class of alteration (substitution, insertion-deletion, copy number alterations, and rearrangements) in various genomic contexts across a broad selection of genes as well as analysis of genomic signatures including MSI and TMB. Table 5 provides a summary of genes and alteration types associated with validation studies.

Table 4. Summary of Tissue Types Included in Validation Studies.

Tissue or Tumor Type	Limit of Detection	Precision	Pan-Tumor Analysis	NGS Concordance	Inter-Laboratory Concordance	CDx Concordance	DNA Extraction	DNA Stability (part 1)	FFPE Slide Stability	Interfering Substances	Guard Banding/Robustness	Molecular Index Barcodes	Variant Curation	Reagent Stability
Abdomen or Abdominal wall			■	■	■			■						
Adrenal Gland			■	■	■									
Anus			■	■	■									
Appendix			■	■	■									
Bladder			■	■	■		■							
Bone			■	■	■									
Brain			■	■	■		■	■						
Breast	■	■	■	■		■	■	■	■	■	■	■	■	
Cervix			■	■	■			■						
Chest wall			■	■	■			■						
Colon	■		■	■	■	■	■	■	■	■	■	■	■	
Diaphragm			■	■	■			■						
Duodenum			*	■	■									

Tissue or Tumor Type	Limit of Detection	Precision	Pan-Tumor Analysis	NGS Concordance	Inter-Laboratory Concordance	CDx Concordance	DNA Extraction	DNA Stability (part 1)	FFPE Slide Stability	Interfering Substances	Guard Banding/Robustness	Molecular Index Barcodes	Variant Curation	Reagent Stability
Ear			*											
Endometrium			*											
Esophagus														
Fallopian Tube														
Gallbladder														
Gastro-esophageal junction														
Head and Neck														
Kidney														
Larynx			*											
Liver														
Lung														
Lymph Node														
Malignant effusions														
Mediastinum														
Nasal Cavity			*											
Omentum														
Ovarian														
Pancreas														
Pancreatobiliary														
Parotid Gland			*											
Pelvis														
Penis			*											
Pericardium														
Peritoneum														
Pleura			*											
Prostate														
Rare Tissues*														
Rectum			*											
Salivary Gland														
Skin (Melanoma)														
Small Intestine														
Soft Tissue														
Spleen														
Stomach														

Tissue or Tumor Type	Limit of Detection	Precision	Pan-Tumor Analysis	NGS Concordance	Inter-Laboratory Concordance	CDx Concordance	DNA Extraction	DNA Stability (part 1)	FFPE Slide Stability	Interfering Substances	Guard Banding/Robustness	Molecular Index Barcodes	Variant Curation	Reagent Stability
Thyroid														
Tongue			*											
Trachea			*											
Ureter														
Uterus														
Vagina														
Vulva														
Whipple Resection														

***Included as "Rare Tissues" in Pan-Tumor Analysis**

Table 5. Summary of Genes and Alteration Types Included in Validation Studies.

Genes	Substitutions	Insertion/Deletions	CNAs	Rearrangements	Precision	LoD	NGS Concordance	Inter-lab Concordance	In Silico Study	DNA Extraction	Guard Band	Interfering Substances
ABL1												
ACVR1B												
AKT1												
AKT2												
AKT3												
*ALK**												
ALOX12B												
AMER1 (FAM123B)												
APC												
AR												
ARAF												
ARFRP1												
ARID1A												
ASXL1												
ATM												
ATR												
ATRX												
AURKA												
AURKB												
AXIN1												
AXL												

Genes	Substitutions	Insertion/Deletions	CNAs	Rearrangements	Precision	LoD	NGS Concordance	Inter-lab Concordance	In Silico Study	DNA Extraction	Guard Band	Interfering Substances
BAP1	■	■	■			■	■	■	■			
BARD1	■	■			■	■	■	■	■			
BCL2	■	■			■		■	■	■	■		
BCL2L1			■					■	■		■	■
BCL2L2	■		■	■				■	■			
BCL6	■	■	■		■			■	■		■	
BCOR	■	■			■	■	■	■	■	■		
BCORL1	■	■			■	■	■	■	■	■	■	
BCR									■			
BRAF	■	■		■	■	■	■	■	■	■		■
BRCA1	■	■	■	■	■	■	■	■	■	■	■	■
BRCA2	■	■	■	■	■	■	■	■	■	■	■	■
BRD4	■	■			■	■		■	■	■		
BRIP1	■	■			■	■	■	■	■	■		■
BTG1	■	■			■			■	■			
BTG2									■			
BTK	■				■	■		■	■			
C11orf30 (EMSY)	■	■	■		■	■		■	■	■	■	
CALR	■						■		■			
CARD11	■	■	■		■	■		■	■			
CASP8	■	■				■		■	■		■	
CBFB									■			
CBL	■	■			■	■	■	■	■	■	■	■
CCND1	■	■	■		■	■	■	■	■	■	■	■
CCND2	■		■					■	■			
CCND3	■		■			■		■	■	■		
CCNE1	■		■			■	■	■	■	■		
CD22	■	■			■	■			■			
CD274	■	■	■					■	■	■		
CD70									■			
CD74									■			
CD79A		■				■			■			
CD79B	■								■	■		
CDC73	■			■				■	■		■	■
CDH1	■	■			■	■	■	■	■	■		
CDK12	■	■	■			■	■	■	■			
CDK4	■		■		■		■	■	■	■		■
CDK6	■								■			■
CDK8	■		■		■	■	■	■	■		■	
CDKN1A	■	■					■	■	■	■		
CDKN1B	■	■				■		■	■			
CDKN2A	■	■	■	■	■	■	■	■	■	■	■	■
CDKN2B	■		■		■	■		■	■	■	■	■
CDKN2C			■						■		■	
CEBPA	■	■	■		■		■	■	■	■		
CHEK1	■				■		■	■	■	■		
CHEK2	■	■				■	■	■	■			
CIC	■	■			■	■		■	■			
CREBBP	■	■			■	■	■	■	■	■	■	
CRKL	■	■			■	■			■	■		
CSF1R	■			■	■	■	■	■	■	■	■	

Genes	Substitutions	Insertion/Deletions	CNAs	Rearrangements	Precision	LoD	NGS Concordance	Inter-lab Concordance	In Silico Study	DNA Extraction	Guard Band	Interfering Substances
CSF3R	■	■			■	■	■		■		■	
CTCF	■	■			■			■	■	■	■	
CTNNA1	■	■	■	■	■			■	■	■		
CTNNB1	■	■	■	■	■		■	■	■	■		■
CUL3	■	■						■	■		■	
CUL4A	■		■		■			■	■	■	■	
CXCR4									■			
CYP17A1	■				■			■	■			■
DAXX	■	■			■	■	■	■	■			
DDR1	■	■			■	■		■	■			
DDR2	■		■		■	■	■	■	■		■	
DIS3	■		■		■	■		■	■	■	■	
DNMT3A	■	■			■		■	■	■			
DOT1L	■		■		■			■	■			
EED									■			
EGFR	■	■	■	■	■	■	■	■	■	■	■	■
EP300	■	■			■	■		■	■	■		
EPHA3	■				■		■	■	■			
EPHB1	■	■			■	■		■	■	■		■
EPHB4	■	■			■	■		■	■	■		■
ERBB2	■		■		■	■	■	■	■		■	■
ERBB3	■	■	■	■	■		■	■	■	■		■
ERBB4	■	■	■		■	■	■	■	■	■		
ERCC4	■				■	■		■	■	■		■
ERG	■	■			■	■		■	■	■		
ERRFI1	■	■			■			■	■	■		
ESR1	■		■		■	■	■	■	■		■	
ETV4									■			
ETV5									■			
ETV6									■			
EWSR1				■	■				■			
EZH2	■				■		■	■	■		■	
EZR									■			
FAM46C	■							■	■			
FANCA	■	■	■		■		■	■	■	■		
FANCC	■				■	■		■	■	■		■
FANCG	■	■	■		■	■		■	■	■		
FANCL	■	■				■		■	■		■	
FAS	■	■				■		■	■			
FBXW7	■	■			■	■	■	■	■	■		■
FGF10	■		■		■	■		■	■		■	
FGF12	■		■					■	■		■	
FGF14	■		■		■			■	■	■	■	■
FGF19	■	■	■		■			■	■	■	■	
FGF23	■		■			■		■	■			
FGF3	■		■	■	■	■		■	■	■	■	
FGF4	■		■		■			■	■	■	■	
FGF6	■		■					■	■	■		
FGFR1	■	■	■	■	■	■	■	■	■	■	■	■
FGFR2	■		■	■		■	■	■	■	■		
FGFR3	■				■		■	■	■	■		■
FGFR4	■	■			■	■	■	■	■		■	

Genes	Substitutions	Insertion/Deletions	CNAs	Rearrangements	Precision	LoD	NGS Concordance	Inter-lab Concordance	In Silico Study	DNA Extraction	Guard Band	Interfering Substances
FH	■	■			■			■	■			
FLCN	■	■			■	■		■	■	■		
FLT1	■	■	■	■	■	■	■	■	■	■	■	
FLT3	■		■		■		■	■	■	■	■	
FOXL2	■	■			■	■		■	■		■	
FUBP1	■	■			■			■	■	■		■
GABRA6	■	■	■		■			■	■	■		
GATA3	■	■	■		■	■	■	■	■		■	
GATA4	■	■	■			■		■	■			
GATA6	■	■	■		■	■		■	■	■		
GID4 (C17orf39)	■							■	■			
GNA11	■		■	■	■		■	■	■			
GNA13	■				■			■	■	■		
GNAQ	■					■	■	■	■			
GNAS	■		■		■	■	■	■	■		■	
GRM3	■				■	■	■	■	■	■		
GSK3B	■							■	■			
H3F3A									■			
HDAC1	■				■				■			
HGF	■				■			■	■	■		■
HNF1A	■	■			■	■	■	■	■	■		
HRAS	■	■					■	■	■			■
HSD3B1	■				■			■	■			
ID3									■			
IDH1	■	■			■	■	■	■	■	■		■
IDH2	■	■			■		■	■	■	■		
IGF1R	■	■	■		■	■	■	■	■	■		■
IKBKE	■	■	■		■	■		■	■			
IKZF1	■		■		■	■	■	■	■			
INPP4B	■				■	■		■	■	■		
IRF2	■				■			■	■			
IRF4									■			
IRS2	■	■	■		■	■		■	■	■	■	
JAK1	■	■	■	■	■	■	■	■	■	■		
JAK2	■	■	■		■		■	■	■	■		
JAK3	■	■	■			■	■	■	■	■		
JUN	■					■			■			
KDM5A	■	■	■		■	■		■	■		■	
KDM5C	■			■	■	■		■	■			
KDM6A	■	■	■		■	■	■	■	■	■		
KDR	■	■	■		■	■	■	■	■	■	■	
KEAP1	■	■			■	■		■	■	■		■
KEL	■				■			■	■	■		■
KIT	■	■	■		■	■	■	■	■	■	■	■
KLHL6	■	■	■		■			■	■	■	■	
KMT2A (MLL)	■	■	■		■	■	■	■	■	■	■	
KMT2D (MLL2)	■	■		■	■	■		■	■	■	■	
KRAS	■	■	■		■	■	■	■	■	■		
LTK	■	■			■	■		■	■	■		
LYN	■	■	■	■	■	■		■	■	■		
MAF	■				■	■			■			

Genes	Substitutions	Insertion/Deletions	CNAs	Rearrangements	Precision	LoD	NGS Concordance	Inter-lab Concordance	In Silico Study	DNA Extraction	Guard Band	Interfering Substances
MAP2K1	■						■	■	■			
MAP2K2	■			■	■	■	■	■	■			
MAP2K4	■	■	■	■			■	■	■	■		
MAP3K1	■	■	■		■	■		■	■	■	■	
MAP3K13	■		■		■	■		■	■	■	■	■
MAPK1	■	■				■	■		■			
MCL1	■		■		■		■	■	■			
MDM2	■		■		■		■		■	■		
MDM4	■		■				■	■	■	■		
MED12	■	■			■	■	■	■	■	■	■	
MEF2B	■		■		■			■	■	■	■	
MEN1	■	■			■	■	■	■	■		■	
MERTK	■							■	■			
MET	■	■			■	■	■	■	■	■		
MITF	■		■		■		■	■	■			
MKNK1	■					■		■	■	■		
MLH1	■	■	■		■	■	■	■	■			
MPL	■	■	■		■		■	■	■	■		
MRE11A	■	■	■	■	■		■	■	■			
MSH2	■	■			■	■	■	■	■		■	
MSH3	■	■			■	■			■	■		
MSH6	■	■			■	■	■	■	■	■		
MST1R	■	■			■	■		■	■	■		■
MTAP	■		■		■	■	■		■	■	■	■
MTOR	■	■			■	■	■	■	■	■		
MUTYH	■				■	■	■	■	■	■		
MYB				■				■	■			
MYC	■	■	■	■	■	■	■	■	■	■	■	
MYCL	■	■	■		■			■	■			
MYCN	■	■					■	■	■			
MYD88	■						■	■	■			
NBN	■	■	■		■	■	■	■	■	■		
NF1	■	■	■	■	■	■	■	■	■	■	■	
NF2	■	■			■		■	■	■			
NFE2L2	■	■				■		■	■	■		
NFKBIA	■	■	■			■		■	■		■	
NKX2-1	■	■	■			■	■	■	■		■	
NOTCH1	■	■		■	■	■	■	■	■	■	■	■
NOTCH2	■	■	■		■		■	■	■		■	■
NOTCH3	■	■			■	■		■	■	■	■	■
NPM1			■					■	■			
NRAS	■						■	■	■			
NT5C2		■				■			■			
NTRK1	■	■	■		■	■	■	■	■	■		■
NTRK2	■	■				■	■	■	■	■		■
NTRK3	■				■	■	■	■	■	■		
NUTM1									■			
P2RY8	■				■				■			
PALB2	■	■			■	■	■	■	■	■		
PARK2	■	■	■	■	■			■	■		■	
PARP1	■				■	■		■	■			
PARP2	■	■			■			■	■		■	

Genes	Substitutions	Insertion/Deletions	CNAs	Rearrangements	Precision	LoD	NGS Concordance	Inter-lab Concordance	In Silico Study	DNA Extraction	Guard Band	Interfering Substances
PARP3	■							■	■	■		■
PAX5	■		■				■	■	■			
PBRM1	■	■	■	■	■	■	■	■	■	■	■	■
PDCD1		■				■			■			
PDCD1LG2	■	■	■		■			■	■			
PDGFRA	■		■		■	■	■	■	■	■	■	■
PDGFRB	■		■		■		■	■	■	■	■	
PDK1	■							■	■			
PIK3C2B	■	■	■	■	■	■		■	■	■		
PIK3C2G	■	■	■		■	■		■	■	■	■	■
PIK3CA	■	■	■	■	■	■	■	■	■	■	■	
PIK3CB	■	■	■		■	■	■	■	■	■	■	
PIK3R1	■	■	■	■	■	■	■	■	■			
PIM1	■				■				■			
PMS2	■		■		■	■	■	■	■	■		
POLD1	■	■	■		■	■	■	■	■	■		■
POLE	■	■			■	■	■	■	■	■	■	
PPARG	■					■		■	■			
PPP2R1A	■	■	■		■			■	■	■	■	
PPP2R2A	■					■			■			
PRDM1	■		■			■		■	■			
PRKAR1A	■							■	■			
PRKCI	■	■	■					■	■	■	■	
PTCH1	■	■			■	■	■	■	■	■		
PTEN	■	■	■		■		■	■	■	■		
PTPN11	■	■		■	■	■	■	■	■	■	■	
PTPRO	■				■				■	■		
QKI		■			■			■	■			
RAC1	■						■	■	■	■		
RAD21	■		■		■	■	■		■	■	■	
RAD51	■							■	■			
RAD51B (RAD51L1)	■		■		■	■		■	■		■	
RAD51C	■	■				■	■	■	■	■		
RAD51D (RAD51L3)	■		■		■	■	■		■			
RAD52	■		■		■			■	■			
RAD54L	■	■			■			■	■	■	■	
RAF1	■				■		■	■	■	■		■
RARA	■	■	■		■	■	■	■	■	■		
RB1	■	■	■	■	■		■	■	■	■		
RBM10	■	■				■		■	■	■		
REL	■	■						■	■			■
RET	■				■	■	■	■	■	■		
RICTOR	■		■		■	■	■	■	■	■	■	■
RNF43	■	■			■	■		■	■	■		
ROS1	■	■	■		■	■	■	■	■	■		
RPTOR	■	■		■	■	■	■	■	■	■	■	■
RSPO2									■			
SDC4									■			
SDHA	■	■	■		■	■		■	■	■	■	■
SDHB	■							■	■			

Genes	Substitutions	Insertion/Deletions	CNAs	Rearrangements	Precision	LoD	NGS Concordance	Inter-lab Concordance	In Silico Study	DNA Extraction	Guard Band	Interfering Substances
SDHC	■		■		■				■			■
SDHD	■							■	■			
SETD2	■	■			■	■		■	■	■		
SF3B1	■				■	■	■	■	■	■		
SGK1	■		■			■			■		■	
SLC34A2									■			
SMAD2	■		■		■		■	■	■			
SMAD4	■	■	■	■	■	■	■	■	■			
SMARCA4	■	■			■	■	■	■	■			
SMARCB1	■	■					■	■	■			
SMO	■	■		■	■	■	■	■	■			
SNCAIP	■	■	■		■			■	■	■	■	■
SOCS1	■							■	■			
SOX2	■		■			■		■	■		■	
SOX9	■	■			■	■		■	■	■	■	■
SPEN	■	■		■	■	■		■	■	■		■
SPOP	■		■	■	■	■	■	■	■	■		
SRC	■		■		■		■	■	■	■		
STAG2	■	■					■	■	■	■		
STAT3	■	■	■		■			■	■	■		
STK11	■	■	■	■	■		■	■	■	■		■
SUFU	■						■	■	■	■		
SYK	■				■	■		■	■	■		
TBX3	■	■	■	■	■	■		■	■	■		
TEK	■		■		■			■	■	■		
TERC			■					■	■		■	
TERT promoter	■					■		■	■	■	■	■
TET2	■	■			■	■	■	■	■	■	■	
TGFBR2	■	■			■	■	■	■	■	■		
TIPARP	■		■			■		■	■		■	■
TMPRSS2				■				■	■			
TNFAIP3	■	■	■		■	■		■	■	■		
TNFRSF14	■	■			■			■	■			
TP53	■	■	■		■	■	■	■	■	■	■	■
TSC1	■	■			■	■	■	■	■	■		
TSC2	■	■			■	■	■	■	■	■	■	■
TYRO3	■	■			■	■		■	■	■	■	
U2AF1	■						■	■	■			
VEGFA	■							■	■	■		■
VHL	■						■	■	■			
WHSC1	■	■			■	■			■	■		
WHSC1L1	■	■	■		■				■			
WT1	■	■					■	■	■	■		■
XPO1	■	■			■			■	■	■		
XRCC2				■	■				■			
ZNF217	■	■	■		■	■		■	■	■	■	
ZNF703	■	■	■		■	■		■	■	■		■

2.1 Concordance – Comparison to an Orthogonal Method

The detection of alterations by FoundationOne CDx™ (F1CDx) assay was compared to results of an externally validated NGS assay (evNGS). Overall there were 157 overlapping genes between the two assays. The comparison between short alterations, including base substitutions and short indels, detected by F1CDx and the orthogonal method included 188 samples from 46 different tumors. A summary of Positive Percent Agreement (PPA) and Negative Percent Agreement (NPA) is provided in Table 6 below. Differences in variants of unknown significance (VUS) alteration calls between the platform were noted, and are expected based on differences in filtering employed by F1CDx and evNGS. Negative predictive value and positive predictive value were also calculated and were found to be different than percent agreement because the two platforms filter VUS differently. Discordant alterations not related to VUS filtering were primarily caused by deletions with low allelic fraction in homopolymer regions. The F1CDx variant calling pipeline imposes a filter based on MAF of ≥0.10 for indels in homopolymer regions to reduce the likelihood of calling false positives resulting from artifacts introduced by the technology. As such, the difference observed was due to varying filter thresholds between the two platforms. For additional concordance results for the CDx-associated variants, refer to the Summary of Clinical Studies in Section 4.

Table 6. Concordance Summary for short variants inclusive of both substitutions and indels.

	F1CDx+ /evNGS+	F1CDx- /evNGS+	F1CDx+ /evNGS-	F1CDx- /evNGS-	PPA [95% CI]*	NPA [95% CI]*
All short variants	1282	73	375	284218	94.6% [93.3%-95.8%]	99.9% [99.9%-99.9%]
Substitutions	1111	39	334	242540	96.6% [95.4%-97.6%]	99.9% [99.8%-99.9%]
Indels	171	34	41	41678	83.4% [77.6%-88.2%]	99.9% [99.9%-99.9%]

*The PPA and NPA were calculated without adjusting for the distribution of samples enrolled using the FoundationOne Laboratory Developed Test (F1 LDT), therefore these estimates may be biased upward.

2.2 Concordance – Comparison to FoundationOne®

To support the use of retrospective data generated using the FoundationOne® (F1 LDT), a concordance study was conducted with FoundationOne CDx™ (F1CDx). This study evaluated a test set of 165 specimens. PPA and NPA between the F1CDx and F1 LDT, using the F1 assay as the reference method, was calculated for all alterations, as well as for alterations binned by type: short variants, copy number alterations (CNAs) and rearrangements. A total of 2325 variants, including 2026 short variants, 266 copy number alterations and 33 rearrangements were included in the study. The study results are summarized in Table 7 below.

Table 7. Summary of Inter-Laboratory Concordance Comparing FoundationOne CDx™ to the FoundationOne LDT (F1).

	F1CDx+/F1 LDT+	F1CDx-/F1 LDT+	F1CDx+/F1 LDT-	F1CDx-/F1 LDT-	PPA	NPA
All variants	2246	33	46	322890	98.6%	99.99%
All short variants	1984	19	23	299099	99.1%	99.99%
Substitutions	1692	10	19	254854	99.4%	99.99%
Indels	292	9	4	44245	97.0%	99.99%
All CNA	230	14	22	19204	94.3%	99.9%
Amplifications	157	10	12	14671	94.0%	99.9%
Losses	73	4	10	4533	94.8%	99.8%
Rearrangements	32	0	1	4587	100.0%	99.98%

The qualitative output for MSI (MSI-H vs. MSS) in the F1 LDT and F1CDx were evaluated. PPA, NPA and Overall Percent Agreement (OPA) of MSI status between the two assays was calculated for all 165

samples. Of the 165 samples, 5 were MSI-H by F1 LDT and 160 were MSS by F1 LDT; there was one discordant sample observed. The discordant sample was called MSS by F1 LDT and MSI-H by F1CDx. After manual review, the discordant case had an MSI score close to the threshold used to classify MSI status. PPA was 100% with a 95% confidence interval (95% CI) of 47.8-100%, NPA was 99.5% with a 95% CI of 96.6%-99.98% and OPA was 99.4% with a 95% CI of 96.7%-99.98%.

TMB concordance was evaluated by comparing the TMB output in terms of mutations per Mb. Analyses were conducted to examine the 21 samples with TMB score of ≥10, as well as all 153 samples with a non-zero TMB scores. The concordance of TMB score between the F1CDx and FoundationOne LDT assays was defined as the ratio of the two scores at log scale, ratio log (ϑDX1 / ϑT7). The 90% bootstrap CI of the ratio is within the equivalence interval (-0.5, +0.5), thus the TMB scores are considered equivalent. The details are summarized in Table 8 below. From linear regression analysis using F1 LDT TMB as the predictor and F1CDx TMB as the outcome, the intercept is - 0.27782[95%CI: -0.662, 0.106], and the slope is 0.94064[%95 CI: 0.919, 0.963]. A graphical representation of the data is presented in Figure 1 below.

Table 8. Summary of TMB Score Concordance Data.

Analysis	Number of samples	90% bootstrap CI of ratio *log* (ϑ_{DX1} / ϑ_{T7})	Acceptance Criteria
F1 LDT TMB Score≥10	21	(-0.246, -0.047)	90% CI is within (-0.5, 0.5)
Non-zero TMB score from F1 LDT or F1CDx	153	(-0.237, -0.120)	

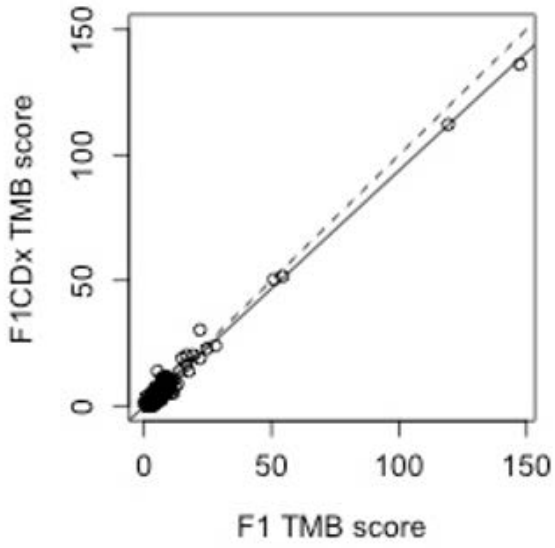

Figure 1. Comparison of F1CDx TMB scores with F1 LDT TMB scores. The solid black line represents the linear regression F1CDx TMB score ~ F1 LDT TMB, and the dash line is the diagonal plot denoting y=x.

2.3 Tissue Comparability

A large-scale retrospective analysis was conducted, using 80,715 specimens from 43 tissue types, in order to establish the comparability of assay performance across tumor tissue types. The goal of the study was to establish that assay performance after DNA extraction is independent of the tissue type from which the DNA was extracted. The retrospective analysis of data included specimens assayed using the F1 LDT assay. DNA extraction, and post-DNA extraction data were assessed for comparability of performance across tissue types. The dataset for analysis consisted of routine clinical samples analyzed using F1 LDT from March 25, 2015 to March 13, 2017.

Thirty-nine of the 43 tissue types had ≥90% of specimens passing DNA extraction QC. Specimen DNA extraction pass rates for the remaining four tissue types, lung, pancreas, pelvis and prostate, were 89.6%, 89%, 89%, and 79.7%, respectively. Each of these four tissue types have characteristically small biopsies and may also be more likely to require macro-dissection.

Of specimens entering the assay at Library Construction (LC), 39 of 43 tissue types had ≥90% of specimens resulting in a successful patient report being issued. The four tissue types below 90% include pancreatobiliary, appendix, pericardium, and prostate, and had pass rates of 83%, 88%, 79%, and 84%, respectively. For these four tissue types, the most frequent cause of failure was low tumor purity with no alterations detected. The mean LC yields across tissue types were 7,050 ng to 8,643 ng compared to the minimum required 545 ng. The percent of specimens passing the LC QC for each tissue type ranged from 98%-100%. After Hybrid Capture (HC), the mean yields across tissue types ranged from 434 ng to 576 ng, well above the minimum requirement of 140 ng. The percent of specimens passing HC across tissue types ranged from ranged from 97%-100%. The average median exon coverage assessed across tissue types ranged from 702X-793X, with percent of specimens passing QC for median coverage across tissue types ranging from 96%-100%. Uniformity of coverage was assessed by calculating the average percent of targets with >100X coverage across tissue types, and ranged from 99.0%-99.8%. The percentage of specimens passing this QC metric ranged from 98%-100%. The average sequencing error rate, assessed across tissue types, is 0.0028-0.0031, well below the required error rate (0.01) for assay acceptance. The pass rate for all tissue types was 100% for error rate. Performance data for this study is summarized in Table 9 below.

Table 9. Summary of post-DNA Extraction Analysis.

QC Metric Name	F1CDx QC Specification	Mean QC Performance Across Tissue Types	QC Pass Rate Across Tissue Types	Tissue types with ≥90% QC Pass Rate
Overall report Pass/Qualified rate	Pass rate: ≥90% specimens	N/A	79%-98%	39/43 (90.6%)
LC Yield	≥545 ng	7050–8643 ng	98-100%	43/43 (100%)
Library Yield after HC	≥140 ng	434-576 ng	97-100%	43/43 (100%)
Median Exon Coverage	≥250X	702-793X	96-100%	43/43 (100%)
Percent of target >100X coverage	≥95% target at ≥100X coverage	99.0%-99.8% targets	98%-100%	43/43 (100%)
Sequencing error rate	<1%	0.0028-0.0031	100%	43/43 (100%)
Noisy copy number data	N/A*	N/A	93.8-100%	43/43 (100%)

*for information only, not a specification

2.4 Analytical Specificity

2.4.1 Interfering Substances

The robustness of the FoundationOne CDx™ (F1CDx) assay process was assessed while evaluating human formalin-fixed paraffin-embedded (FFPE) samples in the presence of exogenous and endogenous interfering substances. Five FFPE specimens representing five tumor types (ovary, lung, colorectal, breast and melanoma) including representative variant types (substitution, indel, amplification, homozygous deletion and rearrangement) were assessed in duplicate (Table 10). An additional 54 short alterations (substitutions and indels) were assessed. The addition of interfering substances including melanin (endogenous), ethanol (exogenous), proteinase K (exogenous), and molecular index barcodes (MIB) (exogenous) was evaluated to determine if they were impactful to F1CDx, and the results were compared to the control (no interferents) condition.

Table 10. Summary of tumor types and variant types included in study.

Tumor Type	Gene (and variant as relevant)	Variant type
CRC	*FGFR1*	Rearrangement
	BCL2L1	Amplification
	AXIN1 c.1058G>A (R353H)	Substitution
	SOX9 c.768_769insGG (R257fs*23)	Insertion
Breast cancer	*ERBB2*	Amplification
	AKT1	Amplification
	CCND1	Amplification
Lung cancer	*CDKN2A*	Homozygous Deletion
	CDKN2B	Homozygous Deletion
	EGFR	Amplification
Ovarian cancer	*BRCA1* c.5263_5264insC (Q1756fs*74)	Insertion
	ERCC4 c.2395C>T	Substitution
	TP53 c.779_779delC (S261fs*84)	Deletion
Melanoma	*BRAF* c.1799T>A (V600E)	Substitution
	TP53 c. 856G>A (E286K)	Substitution
	IGF1R	Amplification

Interfering substances included melanin, ethanol, proteinase K, and molecular index barcodes, as noted in Table 11 below. Each of the five FFPE specimens were tested in either two or four replicates each, resulting in a total of 170 data points across the five specimens (10 without interferent, 80 for evaluation of melanin, ethanol and proteinase K and 80 for molecular index barcodes) were assessed in this study.

Table 11. Interfering Substance Evaluated.

Substances	Level	# Samples	# Replicates/Sample
No Interferent	–	5	2
Melanin	0.025 µg/mL	5	2
Melanin	0.05 µg/mL	5	2
Melanin	0.1 µg/mL	5	2
Melanin	0.2 µg/mL	5	2
Proteinase K	0.04 mg/mL	5	2
Proteinase K	0.08 mg/mL	5	2
Ethanol	5%	5	2
Ethanol	2.5%	5	2
MIB	0	5	4
MIB	5%	5	4

MIB	15%	5	4
MIB	30%	5	4

Substances were considered as non-interfering if, when compared to no interferent, the DNA yield is sufficient to meet the standard processing requirements of DNA isolation (≥55 ng), if the quality was sufficient to create products per the specification of library construction (≥545 ng) and hybrid capture (≥140 ng), and the sample success rate (fraction of samples that met all process requirements and specifications), across all replicates in aggregate, is ≥90%. Sequence analysis was assessed as percent agreement for each sample and calculated as the number of replicates with the correct alteration call reported per the total number of replicates processed. Percent agreement (fraction of correct calls) was computed across all replicates. The acceptance for concordance required a minimum of 90% of correct calls within each treatment category.

All samples tested at all interfering substance levels met all process requirements and specifications; achieving the acceptance criterion of ≥90%, indicating that the sample quality was not impacted by the interfering substances at the levels evaluated. The concordance of variants for the melanin, proteinase K and MIB evaluations was 100%, and was 95.3% for the ethanol evaluation, each meeting the acceptance criterion of ≥90%, indicating that the performance was not affected by the tested interferents. In addition to the variants selected to represent specific alteration types summarized in Table 10, samples included in the study harbored 54 additional short alterations (substitutions and indels) and were 100% concordant across all replicates for each variant.

See Summary of Safety and Effectiveness Data for P160018 for additional interference studies, wherein the interference of necrotic tissue, triglycerides, hemoglobin, and xylene, in addition to ethanol, proteinase K, and MIBs, was evaluated in ovarian tissue and assessed *BRCA1/2* alterations.

2.4.2 *In silico* Analysis – Hybrid Capture Bait Specificity

Bait specificity was addressed through an assessment of coverage at the base level for targeted regions included in FoundationOne CDx™ (F1CDx). Lack of bait specificity and/or insufficient bait inclusion would result in regions of diminished high quality mapped reads due to the capture of off-target content. This analysis showed that all regions that may harbor alterations associated with companion diagnostic claims consistently have high quality (MQS ≥ 30), deep coverage ≥ 250X. When assessing the entire gene set, 99.45% of individual bases in targeted coding regions +/-2 bp of flanking intronic splice site are covered with ≥100X coverage, and 91.45% of individual bases within targeted introns platform-wide had ≥100X coverage**.**

2.4.3 Carryover/Cross-contamination

No carryover or cross-contamination was observed when alternating positive and negative samples for *BRCA1* and *BRCA2* variants, assessed in a checker-board pattern (see Summary of Safety and Effectiveness Data for P160018). In addition, data from plates with high-level confirmed *ERBB2* amplifications, *EGFR* T790M alterations or *ALK* fusions were examined for cross-contamination in adjacent wells containing confirmed negative samples. No contamination was observed.

2.5 Precision: Repeatability and Reproducibility

In this study, repeatability and reproducibility of alterations associated with CDx claims and platform-wide alterations, including agreement for MSI, TMB, and MAF of short variants, were evaluated. Repeatability between intra-run aliquots (run on the same plate under the same conditions) and reproducibility of inter-run aliquots (run on different plates under different conditions) were assessed and compared across three different sequencers and three different reagent lots, across multiple days of performance by multiple operators.

A total of 47 samples had alterations representative of CDx associated alterations as well as exemplar alterations in a variety of genomic contexts, as shown in Tables 12 and 13 below. Each sample also included additional

alterations that were included in the assessment for a total of 717 alterations assessed. The maximum insertion length in this study was 30 bp and the longest deletion was 263 bp.

Table 12. Sample set selection for CDx validation.

Gene	Number of Unique Samples	Alteration	Tumor Type
EGFR	3	Exon 19 Deletion	NSCLC
	2	Exon 21 L858R	
	2	Exon 20 T790M	
KRAS	3	Codons 12/13 substitution	CRC
ALK	3	Fusion	NSCLC
BRAF	3	V600E/V600K	Melanoma
ERBB2	3	Amplification	Breast cancer

Table 13. Sample set selection for platform validation.

Alteration Type	Number of Unique Samples	Alteration Size	Genomic Context
Substitution	3	-	-
Short Insertion	2	1-2bp	Homopolymer Repeats
Short Insertion	2	1-2bp	Dinucleotide Repeats
Short Insertion	2	3-5bp	-
Short Insertion	2	>5bp	-
Short Deletion	2	1-2bp	Homopolymer Repeats
Short Deletion	2	1-2bp	Dinucleotide Repeats
Short Deletion	2	3-5bp	-
Short Deletion	2	>5bp	-
Amplification	3	-	-
Homozygous Deletion	3	-	-
Rearrangement	3	-	-

The results demonstrated that the F1CDx is robust regarding the repeatability and reproducibility of calling genomic alterations. Across all samples, the pre-sequencing process failure is 1.5%, and the no call rate is 0.18% for MSI, 6.38% for TMB (all) and 0.22% for TMB (>10 mut/Mb). Within the assessment of repeatability and reproducibility for CDx variants, all variants from all samples were 100% concordant. Percent of negative calls at each CDx variant location for wild-type samples was 100%.

Similarly, the platform-level repeatability and reproducibility showed high overall agreement across alteration bins, and high sample-level positive and negative call rates as summarized in Tables 14 and 15

below. The platform-level study included a total of 443 substitutions, 188 indels, 55 copy number amplifications, 13 copy number loss, and 18 rearrangements in the variant set across the samples.

Table 14. Reproducibility across variant bins (copy number, rearrangement, substitution, indels).

Variant Bin	# of Variants	# of valid Comparisons	# of Agreements	Positive Percent Agreement	95% CI Lower Limit	95% CI Upper Limit
CNAs	68	67,524	67,300	99.67%	99.62%	99.71%
Rearrangements	18	17,874	17,851	99.87%	99.81%	99.92%
Substitutions	443	439,899	439,649	99.94%	99.94%	99.95%
Indels	188	186,684	186,319	99.80%	99.78%	99.82%
All Variants	717	711,981	711,119	99.88%	99.87%	99.89%

Table 15. Positive and negative call rates per sample for platform variants (N=717).

Alteration Type(s) Assessed		exact 95% CI			exact 95% CI	
	PC Rate*	Lower	Upper	NC Rate**	Lower	Upper
CNA/RE/SUB	100.00%	99.40%	100.00%	99.98%	99.95%	99.99%
CNA/ SUB/Indel	99.37%	98.38%	99.83%	99.96%	99.92%	99.98%
SUB/Indel	100.00%	99.10%	100.00%	99.97%	99.95%	99.99%
CNA/ SUB/Indel	97.84%	96.89%	98.56%	99.84%	99.78%	99.89%
SUB/Indel	99.81%	98.94%	100.00%	99.98%	99.95%	99.99%
SUB/Indel	99.60%	97.81%	99.99%	99.94%	99.90%	99.97%
CNA/ SUB/Indel	98.33%	97.11%	99.14%	99.98%	99.96%	100.00%
SUB/Indel	100.00%	99.83%	100.00%	99.97%	99.94%	99.99%
CNA/ SUB/Indel	100.00%	99.32%	100.00%	99.98%	99.96%	100.00%
RE/ SUB/Indel	96.46%	94.14%	98.05%	99.96%	99.92%	99.98%
CNA/ SUB	98.67%	97.27%	99.46%	99.98%	99.96%	100.00%
CNA/RE/SUB/Indel	96.27%	95.39%	97.02%	99.87%	99.82%	99.91%
RE/SUB/Indel	98.23%	97.48%	98.80%	99.66%	99.58%	99.73%
CNA/ SUB/Indel	98.32%	97.57%	98.89%	99.92%	99.88%	99.95%
SUB/Indel	99.30%	98.90%	99.58%	99.90%	99.86%	99.94%
CNA/RE/SUB/Indel	85.42%	82.27%	88.20%	99.89%	99.84%	99.93%
RE/SUB/Indel	97.75%	96.42%	98.68%	99.98%	99.95%	99.99%
RE/SUB/Indel	95.30%	92.97%	97.03%	99.96%	99.93%	99.98%
CNA/RE/SUB/Indel	100.00%	98.31%	100.00%	99.89%	99.84%	99.93%
CNA/RE/SUB/Indel	100.00%	99.25%	100.00%	99.96%	99.93%	99.98%
CNA /SUB	96.83%	94.90%	98.17%	99.94%	99.90%	99.97%
CNA/RE/SUB/Indel	95.97%	94.06%	97.40%	99.98%	99.96%	100.00%
CNA/ SUB/Indel	100.00%	99.42%	100.00%	99.93%	99.89%	99.96%
CNA/RE/SUB/Indel	100.00%	99.30%	100.00%	99.95%	99.91%	99.97%
RE/SUB	100.00%	99.05%	100.00%	100.00%	99.98%	100.00%
CNA /SUB	96.99%	95.39%	98.15%	99.84%	99.79%	99.89%
CNA/RE/SUB/Indel	100.00%	98.95%	100.00%	99.93%	99.89%	99.96%
CNA/RE/SUB/Indel	99.80%	99.29%	99.98%	99.98%	99.96%	100.00%

*Abbreviations: SUB=substitution, Indel=Insertion or Deletion, CNA=Copy Number Alteration, RE=Rearrangement

For the assessment of MSI, 100% agreement was observed, with a lower limit of 99.7% and upper limit of 100%. For TMB determination, thirteen samples met the inclusion criteria (TMB ≥ 10) for assessment of repeatability and reproducibility. Twelve of 13 samples (92.3%) met the ≤20% Coefficient of Variation (CV) requirements; one sample fell just outside this requirement with a repeatability CV of 21% and reproducibility CV of 23%. The putative source of variability was determined to be low depth of coverage for this sample.

2.5.1 Reagent Lot-to-Lot Reproducibility

Three lots of critical reagents were assessed for four replicates per sample in a full factorial design. Reagents were evaluated as internally prepared kits for each process step (LC, HC, sequencing). The use of three different lots of reagents did not impact performance. Twenty-seven of 28 samples (96.4%) had pairwise agreement estimates (APA and ANA) above 95%; one sample had APA estimates below 90% (85.9% to 88.7%). ANA estimates were greater than 99%. The putative source of variability was determined to be non-focal copy number amplifications with low copy number close to the calling threshold observed in one sample; no specific reagent lot performed differently among three lots for this sample.

2.5.2 Instrument-to-Instrument Reproducibility

Four replicates per sample were sequenced on each of three Illumina HiSeq4000 sequencers, serial numbers K00255, K00256, and K00257 in a full factorial design. The use of three different sequencers did not impact performance. Twenty-seven of 28 samples (96.4%) had pairwise agreement estimates (APA and ANA) at least 97%; one sample had APA estimates below 90% (86.6% to 89.2%). ANA estimates was greater than 99%. The putative source of variability was determined to be non-focal copy number amplifications with low copy number close to the calling threshold observed in one sample; no specific sequencer performed differently among three sequencers for this sample.

2.6 Analytical Sensitivity: Limit of Detection (LoD) and Limit of Blank (LoB)

The Limit of Detection (LoD) of alterations assessed by FoundationOne CDx™ (F1CDx) was evaluated. The LoDs of seven (7) CDx biomarkers are summarized in Table 16-1 and 16-2 below. An additional twelve (12) categories of alteration types were evaluated for the F1CDx assay platform validation. A single FFPE tumor sample was selected for each of the variant categories. For each sample, six levels of MAF, with 13 replicates per level, were evaluated for a total of 78 replicates per sample. For platform-wide LoD assessment, the indels were grouped together (other than homopolymer repeat context) as they are similar in LoD characteristics. The indels ranged from 1 bp up to 42 bp insertions and deletions up to 276 bp. Indels at homopolymer repeat context had higher LoD, with a dependency on the length of the repeat context. In addition, LoD of MSI-high and TMB was also evaluated. The LoD for representative alterations detected by the F1CDx platform is summarized in Table 17-1 and 17.2.

Table 16-1. Summary of LoD for alterations associated with CDx claims (short variants). LoD is based on Allele Fraction.

Alteration	LoD[1] Allele Fraction (%) (100% Hit Rate)	LoD[2] Allele Fraction (%) (Probit)
EGFR L858R	2.4%	< 2.4% (all detected)
EGFR Exon 19 deletion	5.1%	3.4%
EGFR T790M	2.5%	1.8%
KRAS G12/G13	2.3%	< 2.3% (all detected)
BRAF V600E/K	2.0%	< 2.0% (all detected)
BRCA1/2[3]		
Alteration in non-repetitive or homopolymer <4 bp	N/A	5.9%
Deletion in 8 bp homopolymer	N/A	15.3%

[1] LoD calculations for the CDx variants were based on the hit rate approach, as there were less than three levels with hit rate between 10% and 90% for all CDx variants (not including *BRCA*1/2 variants). LoD from the hit rate approach is defined as the lowest level with 100% hit rate (worst scenario).
[2]LoD calculations for the CDx variants based on the probit approach with 95% probability of detection.
[3]See Summary of Safety and Effectiveness Data for P160018.

Table 16-2. Summary of analytical sensitivity for tumor purity for alterations associated with CDx claims (copy number alteration and rearrangement). LoD is based on tumor purity.

Alteration	Tumor Purity (%) (100% Hit Rate)[1]	Tumor Purity (%) (Probit)[2]

ALK fusion	2.6%[3]	1.8%
ERBB2 amplification	25.3%[4]	19.7%

[1]Sensitivity calculations for the CDx variants were based on the hit rate approach, as there were less than three levels with hit rate between 10% and 90%. LoD from the hit rate approach is defined as the lowest level with 100% hit rate (worst scenario).
[2]Sensitivity calculations for the CDx variants based on the probit approach with 95% probability of detection.
[3]The number of chimeric reads for the sample evaluated is 16 at the indicated tumor fraction.
[4]The number of copy number amplifications for the sample evaluated is 6 at the indicated tumor fraction.

Table 17-1. Summary of representative LoD for F1CDx platform (short variants)

Variant Category	Subcategory	N	Range LoD[1] Allele Fraction (%)
Base Substitutions	known[3]	21[2]	1.8-7.9[2]
	other[4]	166	5.9-11.8
Indels at non-homopolymer context, including insertions up to 42bp and deletions up to 276bp	known	3	4.5-6.5
	other	17	6.0-10.2
Indels at homopolymer context	5bp repeat	8	10.0-12.2
	6bp repeat	2	13.6-13.7
	7bp repeat	4	16.3-20.4
	8bp repeat	3	17.0-20.0

[1]LoD calculations for the platform variants were based on the hit rate approach for variants with less than three levels with hit rate between 10% and 90% and probit approach for variants with at least three levels with hit rate between 10% and 90%. LoD from the hit rate approach is defined as the lowest level with 100% hit rate (worst scenario).
[2]Data includes an alteration in the *TERT* promoter, 124C>T (LoD of 7.9%). *TERT* is the only promoter region interrogated and is highly enriched for repetitive context of poly-Gs, not present in coding regions.
[3]Alterations classified as" known" are defined as those that are listed in COSMIC
[4]Alterations classified as "other" include truncating events in tumor suppressor genes (splice, frameshift and nonsense) as well as variants that appear in hotspot locations but do not have a specific COSMIC association, or are considered variants of unknown significance (VUS) due to lack of reported evidence and conclusive change in function.

Table 17-2. Summary of representative analytical sensitivity for tumor purity for F1CDx platform alterations (copy number variants and rearrangements)

Variant Category	N	Range Tumor Purity (%)[1]
Copy Number Amplifications (CN>10)	8	9.6%-18.5%
Copy Number Amplifications (6≤CN≤10)	7	19.5%-58.3%[2]
Copy Number: Homozygous Deletions	3	33.4%-33.4%
Genomic Rearrangements	3	9.2%-14.9%
MSI-High	3	8.3%-15.8%

[1]Sensitivity calculations for the platform variants were based on the hit rate approach for variants with less than three levels with hit rate between 10% and 90% and probit approach for variants with at least three levels with hit rate between 10% and 90%. LoD from the hit rate approach is defined as the lowest level with 100% hit rate (worst scenario)
[2]Max represents VUS alteration at calling threshold.

The LoB of zero was confirmed through the assessment of alterations within the LoB samples, with a percentage of false-positive results less than 5% (type I error risk α=0.05). Seventy-five (75) samples were used for the assessment of LoB. For all the alterations evaluated for LoD, the LoB of zero was confirmed. A similar study was conducted for *BRCA* alterations (PMA P160018) with no false-positive *BRCA* calls observed, thus confirming the LoB of zero for *BRCA*.

2.7 Stability

2.7.1 Reagent Stability

Identical reagents with the same specifications are used following the same protocols for both the FoundationFocus CDx*BRCA* Assay and FoundationOne CDx™ (F1CDx). For reagent stability performance data, see the Summary of Safety and Effectiveness Data for P160018. The claimed reagent stability is 4 months for the library construction (LC) and hybrid capture (HC) kits, and 3 months for the sequencing kits.

2.7.2 DNA Stability

Stability of DNA was evaluated through a retrospective review of data generated using the FoundationOne LDT assay. Samples from 47 unique clinical specimens from 21 different tissues of origin were evaluated. The sample set covered 200 alterations inclusive of nucleotide changes, indels, copy number amplifications, copy number losses and rearrangements. Duration of DNA storage at time of testing ranged from 48 to 464 days, with a median of 184 days and a mean of 199 days. A total of 199 of 200 alteration calls were concordant. A 242-day old sample with a single alteration call that met inclusion criteria was discordant; however, this sample was classified as not meeting all QC criteria due to other data quality issues. DNA age for the sample with discordance was 242 days. Sixteen other samples had concordant calls with DNA age >242 days. Based on this data, DNA stored in accordance with internal procedures can be considered stable for up to six months. Further supporting this retrospective data is a prospective study conducted using ovarian cancer samples, see the Summary of Safety and Effectiveness Data for P160018. An additional prospective DNA stability study is underway.

2.7.3 FFPE Sample Stability

The FFPE Slide Stability Study is an ongoing study with data summarized for T_0, T_1 (30 days), and T_2 (6 months). This study evaluated the stability of FFPE tumor tissue prepared as slides prior to DNA extraction for use within the F1CDx Assay. Five tumor samples including ovarian, lung, colorectal cancer, melanoma and breast cancer that contained a variety of DNA alterations, as described in Table 18 below. The five samples were selected to include specific alteration types that were reflective of the CDx-alterations, but were found to contain additional alterations as well (13 CNAs, one rearrangement, 53 base substitutions and five indels; refer to Table 19). To assess stability of pre-cut FFPE tissue for genomic alterations, the agreement between results from the defined time points for each sample were calculated by comparing the alteration call reported at each follow-up time point to the alteration call at baseline (T_0). Alterations at the 30-day time point and the 6-month time point are in 100% agreement with the Day 0 baseline results (T_0). The FFPE slides are considered stable for at least 6 months. Further assessment at Months 12 and 15 will evaluate stability of FFPE slides beyond 6 months.

Table 18. Stability Results at baseline, 30 days and 6 months.

Tissue	Baseline Call (T_0)		Percent Agreement to T_0	Percent Agreement to T_0
	Gene	Variant Effect	30 days (T_1)	6 months (T_2)
Ovarian	*BRCA1*	c.1340_1341insG, p.H448fs*8	100% (2/2)	100% (2/2)
Lung	*KRAS*	c.34G>T, p.G12C	100% (2/2)	100% (2/2)
CRC	*PIK3CA*	c.3139C>T, p.H1047Y	100% (2/2)	100% (2/2)
Melanoma	*CDKN2A*	Homozygous Deletion	100% (2/2)	100% (2/2)
Melanoma	*CDKN2B*	Homozygous Deletion	100% (2/2)	100% (2/2)
Breast	*ERBB2*	Amplification	100% (1/1)	100% (2/2)

Table 19. Percent agreement for each variant type.

Variant type	Number of variants	30 days (T_1) Percent Agreement (# agreement/total)	95% 2-sided CI LB, UB*	6 months (T_2) Percent Agreement (# agreement/total)	95% 2-sided CI LB, UB*
Copy Number	13	100% (23/23)	85.2%, 100.0%	100% (26/26)	86.8%, 100.0%
Rearrangement	1	100% (2/2)	15.8%, 100.0%	100% (2/2)	15.8%, 100.0%

Variant type	Number of variants	30 days (T_1) Percent Agreement (# agreement/total)	95% 2-sided CI LB, UB*	6 months (T_2) Percent Agreement (# agreement/total)	95% 2-sided CI LB, UB*
Substitution	53	100% (98/98)	96.3%, 100.0%	100% (106/106)	96.6%, 100.0%
Insertion/Deletion	5	100% (7/7)	59.0%, 100.0%	100% (10/10)	69.2%, 100.0%

*LB: lower bound; UB: upper bound

2.8 Reagent Lot Interchangeability

Identical reagents with the same specifications are used following the same protocols for both the FoundationFocus CDx$_{BRCA}$ assay and FoundationOne CDx™. For reagent lot interchangeability performance data, see the Summary of Safety and Effectiveness Data for P160018.

2.9 General Lab Equipment and Reagent Evaluation

2.9.1 DNA Amplification

Identical reagents and equipment with the same specifications are used following the same protocols for both the FoundationFocus CDx$_{BRCA}$ Assay and FoundationOne CDx™. For DNA amplification performance data, see the Summary of Safety and Effectiveness Data for P160018.

2.9.2 DNA Extraction

The performance of DNA extraction from FFPE tumor specimens was evaluated. The DNA extraction procedure for the FoundationOne CDx™ (F1CDx) assay was assessed by testing FFPE specimens including two samples per tissue type for ten different tumor tissue types including lung, breast, ovarian, melanoma, colorectal, brain, hepatic, pancreatic, thyroid, and bladder with different representative types of alterations. Samples were run in duplicate for a total of 240 extractions, employing two different KingFisher Flex Magnetic Particle Processors (120 extractions per processor) and comparing across three extraction reagent lots (80 extractions per reagent lot). Average DNA yield was calculated across twelve (12) replicates for each sample. All average DNA yields were significantly above the minimum requirement of 55 ng, with the minimum being 758.3 ng. Only one sample aliquot of the 240 replicates failed the DNA yield specification, and the success rates based on the reagent lot and the equipment were 98.8% (79/80) and 99.2% (119/120), respectively, passing the acceptance criteria (≥90%). Concordance of all genomic alterations detected was also analyzed for all variants across 12 replicates for each sample. Table 20 provides a summary of concordance across replicates. A study with an additional ten samples will be completed post-market.

Table 20. Summary of Concordance Across Replicates of DNA Extraction Study.

Group	$N_{concordance}$	N_{total}	Concordance	95% CI
Substitutions (All MAF)	2700	2969	90.9%	[89.9% 91.9%]
Substitutions (MAF > 10%)	1631	1637	99.6%	[99.2% 99.9%]
Substitutions (All MAF, excluding hypermutated sample)*	1663	1685	98.7%	[98% 99.1%]
Indel (All)	465	476	97.7%	[95.9% 98.8%]
Copy Number: Amplification	307	314	97.8%	[95.4% 99%]
Copy Number: Loss	132	144	91.7%	[85.9% 95.3%]
Rearrangement	84	90	93.3%	[85.9% 97.2%]

*One sample included in the study was hypermutated, harboring many alterations near LoD and exhibited evidence of external contamination. Concordance of substitutions was 80.8% for this sample.

2.10 Guard banding/Robustness

Guard banding studies were performed to evaluate the impact of process variation with regard to the measurement of DNA concentration at various stages of the process. Guard bands were evaluated relative to observed and measured process variability for Library Construction (LC), Hybrid Capture (HC), and Sequencing. Each of the three guard banding experiments demonstrated reliable and robust performance at all DNA input levels evaluated.

A total of 255 samples were processed; ninety (90) to assess DNA input into LC, ninety (90) to assess DNA input into HC, and seventy-five (75) to assess DNA input into sequencing. For LC input, five samples were run in triplicate over six different DNA input levels representing -20% and -50% from the lower limit (50 ng) to +20% and +50% from the upper limit (1000 ng) needed for LC (n=90). Five samples were run in triplicate over six DNA input levels representing -25% and -50% from the lower limit (0.5 µg) to +25% and +50% from the upper limit (2.0 µg) for HC input. The third component of the guard banding study evaluated the captured DNA input into the sequencing reaction. Five samples were run in triplicate over five different DNA input levels representing ±10% and ±20% from the required amount needed for sequencing (1.75 nM; n=75). Concordance of detected alterations was calculated for each condition across successful replicates. Results from this study supports the robustness of the F1CDx process. The study design and results are shown below in Tables 21-1 through 21-4.

Table 21-1. Summary of the success rate per process and per input level, and concordance of substitutions (SUB) among successful replicates.

Process	Input Level	# of Sample Failures	Variant Type	# of Concordant Successes	# of Variant Comparisons	Success Rate (95% CI) (Number of Concordant comparisons)
LC	25 ng	1/15	SUB	184	184	100.0% (98.0%, 100.0%)
LC	40 ng	0/15	SUB	192	192	100.0% (98.1%, 100.0%)
LC	50 ng	0/15	SUB	191	192	99.5% (97.1%, 100%)
LC	1000ng	0/15	SUB	192	192	100.0% (98.1%, 100.0%)
LC	1200 ng	0/15	SUB	191	192	99.5% (97.1%, 100%)
LC	1500 ng	0/15	SUB	190	192	99.0% (96.3%, 99.9%)
HC	0.25 µg	15/15	SUB	0	0	NA* (no samples sequenced)
HC	0.375 µg	12/15	SUB	30	30	100.0% (88.4%, 100.0%)
HC	0.5 µg	1/15	SUB	166	166	100.0% (97.8%, 100.0%)
HC	2.0 µg	0/15	SUB	192	192	100.0% (98.1%, 100.0%)
HC	2.5 µg	0/15	SUB	192	192	100.0% (98.1%, 100.0%)
HC	3.0 µg	0/15	SUB	192	192	100.0% (98.1%, 100.0%)
Seq	1.4 nM	0/15	SUB	192	192	100.0% (98.1%, 100.0%)
Seq	1.575 nM	1/15	SUB	180	180	100.0% (98.0%, 100.0%)
Seq	1.75 nM	1/15	SUB	184	184	100.0% (98.0%, 100.0%)
Seq	1.925 nM	0/15	SUB	192	192	100.0% (98.1%, 100.0%)
Seq	2.1 nM	0/15	SUB	192	192	100.0% (98.1%, 100.0%)

* All samples failed at the input level of 0.25 µg and as a result, there is no data available to present for that level.

Table 21-2. Summary of the success rate per process and per input level, and concordance of insertions and deletions (INDEL) among successful replicates.

Process	Input Level	# of sample failures	Variant Type	# of concordant successes	# of variant comparisons	Success Rate (95% CI) (Number of Concordant comparisons)
LC	25 ng	1/15	INDEL	17	17	100.0% (80.5%, 100.0%)

Process	Input Level	# of sample failures	Variant Type	# of concordant successes	# of variant comparisons	Success Rate (95% CI) (Number of Concordant comparisons)
LC	40 ng	0/15	INDEL	18	18	100.0% (81.5%, 100.0%)
LC	50 ng	0/15	INDEL	18	18	100.0% (81.5%, 100.0%)
LC	1000ng	0/15	INDEL	18	18	100.0% (81.5%, 100.0%)
LC	1200 ng	0/15	INDEL	18	18	100.0% (81.5%, 100.0%)
LC	1500 ng	0/15	INDEL	18	18	100.0% (81.5%, 100.0%)
HC	0.25 µg	15/15	INDEL	0	0	NA* (no samples sequenced)
HC	0.375 µg	12/15	INDEL	4	4	100.0% (39.8%, 100.0%)
HC	0.5 µg	1/15	INDEL	18	18	100.0% (81.5%, 100.0%)
HC	2.0 µg	0/15	INDEL	18	18	100.0% (81.5%, 100.0%)
HC	2.5 µg	0/15	INDEL	18	18	100.0% (81.5%, 100.0%)
HC	3.0 µg	0/15	INDEL	18	18	100.0% (81.5%, 100.0%)
Seq	1.4 nM	0/15	INDEL	18	18	100.0% (81. 5%, 100.0%)
Seq	1.575 nM	1/15	INDEL	16	16	100.0% (79.4%, 100.0%)
Seq	1.75 nM	1/15	INDEL	17	17	100.0% (80.5%, 100.0%)
Seq	1.925 nM	0/15	INDEL	18	18	100.0% (81.5%, 100.0%)
Seq	2.1 nM	0/15	INDEL	18	18	100.0% (81.5%, 100.0%)

* All samples failed at the input level of 0.25 µg and as a result, there is no data available to present for that level.

Table 21-3. Summary of the success rate per process and per input level, and concordance of rearrangements (RE) among successful replicates.

Process	Input Level	# of sample failures	Variant Type	# of concordant successes	# of variant comparisons	Success Rate (95% CI) (Number of Concordant comparisons)
LC	25 ng	1/15	RE	6	6	100.0% (54.1%, 100.0%)
LC	40 ng	0/15	RE	6	6	100.0% (54.1%, 100.0%)
LC	50 ng	0/15	RE	6	6	100.0% (54.1%, 100.0%)
LC	1000ng	0/15	RE	6	6	100.0% (54.1%, 100.0%)
LC	1200 ng	0/15	RE	6	6	100.0% (54.1%, 100.0%)
LC	1500 ng	0/15	RE	6	6	100.0% (54.1%, 100.0%)
HC	0.25 µg	15/15	RE	0	0	NA* (no samples sequenced)
HC	0.375 µg	12/15	RE	2	2	100.0% (15.8%, 100.0%)
HC	0.5 µg	1/15	RE	6	6	100.0% (54.1%, 100.0%)
HC	2.0 µg	0/15	RE	6	6	100.0% (54.1%, 100.0%)
HC	2.5 µg	0/15	RE	6	6	100.0% (54.1%, 100.0%)
HC	3.0 µg	0/15	RE	6	6	100.0% (54.1%, 100.0%)
Seq	1.4 nM	0/15	RE	8	9	88.9% (51.8%, 99.7%)
Seq	1.575 nM	1/15	RE	9	9	100.0% (66.4%, 100.0%)
Seq	1.75 nM	1/15	RE	8	8	100.0% (63.1%, 100.0%)
Seq	1.925 nM	0/15	RE	8	9	88.9% (51.8%, 99.7%)
Seq	2.1 nM	0/15	RE	7	9	77.8% (40.0%, 97.2%)

* All samples failed at the input level of 0.25 µg and as a result, there is no data available to present for that level.

Table 21-4. Summary of the success rate per process and per input level, and concordance of copy number alterations (CN) among successful replicates.

Process	Input Level	# of sample failures	Variant Type	# of concordant successes	# of variant comparisons	Success Rate (95% CI) (Number of Concordant comparisons)
LC	25 ng	1/15	CN	128	128	100.0% (97.2%, 100.0%)
LC	40 ng	0/15	CN	132	132	100.0% (97.2%, 100.0%)
LC	50 ng	0/15	CN	132	132	100.0% (97.2%, 100.0%)
LC	1000ng	0/15	CN	132	132	100.0% (97.2%, 100.0%)
LC	1200 ng	0/15	CN	132	132	100.0% (97.2%, 100.0%)
LC	1500 ng	0/15	CN	132	132	100.0% (97.2%, 100.0%)
HC	0.25 µg	15/15	CN	0	0	NA* (no samples sequenced)
HC	0.375 µg	12/15	CN	13	14	92.9% (66.1%, 99.8%)
HC	0.5 µg	1/15	CN	107	108	99.0% (95.0 %, 100.0%)
HC	2.0 µg	0/15	CN	129	132	97.7% (93.5%, 99.5%)
HC	2.5 µg	0/15	CN	129	132	97.7% (93.5%, 99.5%)
HC	3.0 µg	0/15	CN	130	132	98.5% (94.6%, 99.8%)
Seq	1.4 nM	0/15	CN	131	132	99.2% (95.9%, 100.0%)
Seq	1.575 nM	1/15	CN	122	128	95.3% (90.1%, 98.3%)
Seq	1.75 nM	1/15	CN	128	128	100.0% (97.2%, 100.0%)
Seq	1.925 nM	0/15	CN	130	132	98.5% (94.6%, 99.8%)
Seq	2.1 nM	0/15	CN	131	132	99.2% (95.9%, 100.0%)

* All samples failed at the input level of 0.25 µg and as a result, there is no data available to present for that level.

3. Clinical Studies

CDx claims were based on a non-inferiority (NI) statistical testing approach using the enrichment design presented in the paper by Li (2016)[1], when the concordance study sample is not a random sample from the companion diagnostic (F1CDx) intended use population and a reference standard is not available.

To assess clinical concordance, F1CDx was compared to FDA-approved CDxs (CCD). All studies based on NI passed the acceptance criteria specified in each study protocol. Clinical concordance studies, with the exception of *ALK* and *EGFR* T790M, were subject to pre-screening bias. Therefore, the concordance results may be over or under estimated and the failure rate may be underestimated.

3.1 FoundationOne CDx™ Concordance Study for *EGFR* Exon19delL858R

Clinical validity of FoundationOne CDx™ (F1CDx) as a companion diagnostic used for identifying patients with advanced NSCLC who may be eligible for treatment with Gilotrif® (afatinib), Iressa® (gefitinib), or Tarceva® (erlotinib) was established by retrospectively testing 282 samples from NSCLC patients. The *EGFR* diagnostic results from the F1CDx assay were compared against those obtained from the approved **cobas**® *EGFR* Mutation Test v2 (Roche Molecular Systems). Samples were tested using **cobas**® *EGFR* mutation test (CCD1) with an approximately equal number of mutation positive and negative samples, followed by testing with F1CDx and a second, replicate testing of **cobas**® *EGFR* mutation test (CCD2). NSCLC tumor samples used for this study were not obtained from a clinical trial and had limited demographic data available. For this study age and gender data were available and were found to be similar to the pivotal study EURTAC.

Two separate concordance analyses were performed: one with samples with complete records only (N = 267), and the other with all the 282 samples, where missing data was handled by multiple imputation. Data from concordance testing is summarized in Table 22 below.

Table 22. Concordance Table with CCD1, CCD2 and F1CDX results with eligible samples.

	CCD1+				CCD1-			
	CCD2+	CCD2-	CCD2 missing	Total	CCD2+	CCD2-	CCD2 missing	Total
F1CDx+	106	0	0	106	1	1*	0	2
F1CDx-	2**	1	0	3	3	153	0	156
F1CDx Missing	3	0	0	3	1	9	2	12
Total	111	1	0	112	5	163	2	170

***** QRF006212 was the only sample where both replicates of the **cobas**® v2 assay reported negative results but F1CDx reported positive for L858R with AF 33%. Upon further review, F1CDx identified a second somatic mutation in-cis (on same allele) as that of L858R with identical AF only 17bp downstream: *EGFR* A864P. Therefore, it is suspected that this second mutation interfered with the allele-specific PCR primers of **cobas**® v2, and thus L858R went undetected.
****** QRF005867 was reported as positive for both replicates of **cobas**® v2 for exon19 deletion, but negative by F1CDx. F1CDx detected the exon19 deletion, but incorrectly annotated the variant as 2 frameshift mutations. This would have been corrected by manual curation review, which was not part of this concordance study. QRF005883 was also reported as positive for both replicates of **cobas**® v2 for exon19 deletion, but negative by F1CDx. F1CDx identified an 18bp exon 19 insertion event, with protein effect K745_E746insIPVAIK. As **cobas**®v2 is not designed to detect insertion events at exon 19, it is likely an error by **cobas**® v2.

Fifteen (15) samples were assigned as missing data for F1CDX, two of which also had missing results for CCD2. Missing data was caused by process failures or samples not meeting assay specifications.

By defining the reference standard as the consensus calls between CCD1 and CCD2, F1CDx achieved a PPA of 98.1% (106/108) (95% CI [93.5%, 99.8%]) and NPA of 99.4% (153/154) (95% CI [96.4%, 100.0%]). These data are summarized in Table 23.

Table 23. Summary of concordance data using agreement between CCD1 and CCD2 as the reference.

	CCD1+/CCD2+	**CCD1-/CCD2-**
F1CDX+	106	1
F1CDX-	2	153

The mutations detected by **cobas**® *EGFR* mutation test include all the mutations detected by therascreen® *EGFR* RGQ PCR Kit, as well as a few additional exon19 deletions/L858R variants. Several concordance studies comparing the **cobas**® *EGFR* mutation test and therascreen® *EGFR* RGQ PCR Kit have been reported in literature[2,3,4], supporting that these two assays are concordant.

Additionally, a post-market concordance study will be completed comparing F1CDx to the therascreen® *EGFR* RGQ PCR Kit.

3.2 FoundationOne CDx™ Concordance Study for *EGFR* T790M

The study established the clinical validity of the FoundationOne CDx™ (F1CDx) as a companion diagnostics device used for identifying NSCLC patients harboring *EGFR* T790M that may be eligible for treatment with Tagrisso® (osimertinib). The patient samples and corresponding demographic information were obtained from AstraZeneca in connection with the clinical studies entitled AURA (NCT01802632), AURA2 (NCT02094261) and AURA3 (NCT02151981). The *EGFR* T790M diagnostic results from the F1CDx assay were compared against the consensus calls between the original T790M testing used in the AURA, AURA2 and AURA3 studies and a separate run of the FDA approved **cobas**® v2 *EGFR* Mutation

Test (Roche Molecular Systems, referred to as **cobas**® v2 assay below; designated as comparator companion diagnostic, CCD), using a NI approach.

Two separate concordance analyses were performed: one included samples with complete records only (N = 227), and the second analysis was with all the 312 samples, where missing data was handled by multiple imputation. A summary of concordance is presented in Table 24.

Table 24. Concordance Table with CCD1, CCD2 and F1CDX results with eligible samples.

	CCD1+				**CCD1-**			
	CCD2+	CCD2-	CCD2 missing	Total	CCD2+	CCD2-	CCD2 missing	Total
F1CDx+	87	19	1	107	8	15	0	23
F1CDx-	1	4	0	5	0	93	2	95
F1CDx Missing	21	4	8	33	1	37	11	49
Total	109	27	9	145	9	145	13	167

Eighty-two samples were assigned as missing data for F1CDx, which consisted of 78 samples with no sequencing results from F1CDx and four samples with QC status as “Fail” after curation. CCD2 had 22 samples with missing data in total, in which 19 samples also had missing values in F1CDx.

The concordance analysis above shows that for the results of PPA, F1CDx is more concordant with both CCD1 and CCD2 than CCD1 is with CCD2; the opposite is true for NPA results. See Venn Diagram below for the T790M-positive calls (Figure 2).

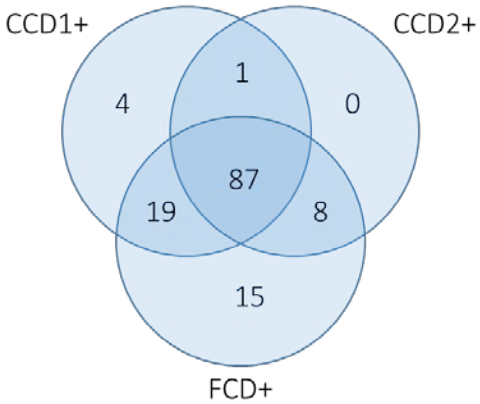

Figure 2. Venn Diagram for *EGFR* T790M-positive samples

A difference in detection sensitivity between CCD1 and CCD2 was observed, with CCD1 appearing to be more sensitive than CCD2. This could be attributed to the fact that CCD1 was run 2-3 years ago using freshly biopsied tissue, while CCD2 testing was recently performed using DNA extracted from archival FFPE sections. Figure 3 below illustrates the relationship between allele frequency and detection by F1CDx, CCD1 and CCD2. The results demonstrated that F1CDx detects mutations at allele frequency lower than 5% which are not detected by **cobas**® v2 assay. The clinical performance in this subset of patient population (patients with an *EGFR* T790M mutation detected with an allele fraction <5%) is ongoing and has not been established.

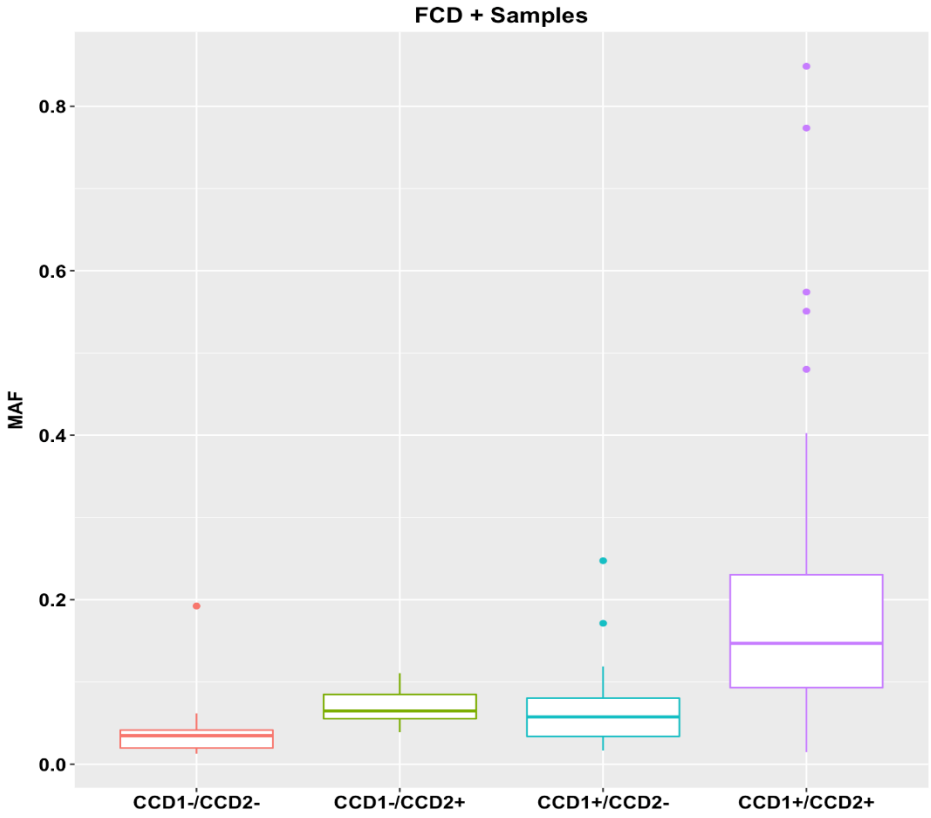

Figure 3. Distribution of MAF in F1CDx+ (FCD) samples

By defining the reference standard as the consensus calls between CCD1 and CCD2, F1CDx achieved a PPA of 98.9% (87/88) (95% CI [93.8%, 100.0%]) and NPA of 86.1% (93/108) (95% CI [78.1%, 92.0%]) as summarized in Table 25 below.

Table 25. Summary of concordance data using agreement between CCD1 and CCD2 as the reference.

	CCD1+/CCD2+	CCD1-/CCD2-
F1CDx+	87	15
F1CDx-	1	93

3.3 FoundationOne CDx™ Concordance Study for *ERBB2* (HER2)

Clinical validity of FoundationOne CDx (F1CDx) as a companion diagnostic device used to identify patients eligible for treatment with approved HER2-directed therapies including Herceptin® (trastuzumab), Kadcyla® (ado-trastuzumab-emtansine), and Perjeta® (pertuzumab) was established. A study was performed using 317 pre-screened retrospective samples obtained from patients with advanced breast cancer. The failure rate for pre-screening is not known, however, the sample set is enriched for samples with HER2+ samples with ratio between 2 and 3 representing 27% of samples compared to the expected range of 8-10% reported in literature[5,6]. The *ERBB2* amplification positive results from the F1CDx assay were compared against those obtained from the approved HER2 FISH PharmDx® Kit (Dako Denmark A/S). The samples used for this study were not obtained from a clinical trial and had limited demographic data available. For this study age and ethnicity data were available. Age data was compared to the Danish Study for the Danish Breast Cancer Group clinical trial 89-D in 1990 and was found to have a similar distribution, though the mean age was higher for the concordance samples.

Concordance data are summarized in Table 26 below.

Table 26. Concordance Table with CCD1, CCD2 and F1CDx results with eligible samples.

	CCD1+			**CCD1-**		
	CCD2+	CCD2-	Total	CCD2+	CCD2-	Total
F1CDx+	101	2	103	3	3	6
F1CDx-	12	10	22	6	180	186
Total	113	12	125	9	183	192

The prevalence of the *ERBB2*/HER2 amplification mutation in the IU population is based on the ASCO guideline and is estimated to be 17.5%. To assess the impact of prevalence for the main results of this study, a sensitivity analysis was performed using the lower and upper bound of the prevalence guideline of 15% and 20%. The sensitivity analysis also showed that there was no impact on the study conclusion. The distribution of age is similar to the IU population for all samples tested. However, there was missing demographic data from the sample population. For missing data analysis using multiple imputation, the results show that based on the MAR assumption, the invalid test results did not affect the conclusion of this study.

The Venn diagrams for samples tested positive or negative for *ERBB2*/HER2-amplification mutation in all three assays (F1CDx, CCD1 and CCD2) are presented in Figure 4.

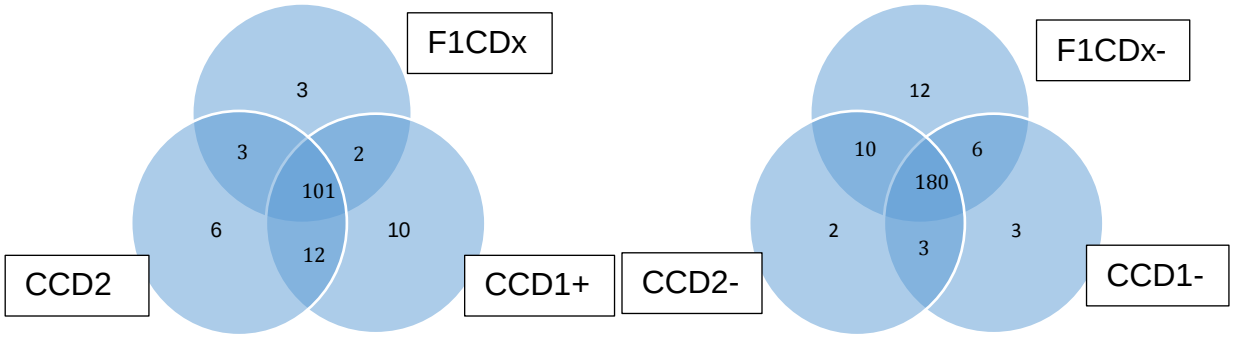

Figure 4. Venn Diagrams for *ERBB2*-amplification positive (left panel) and negative (right panel) samples.

These two Venn diagrams illustrate concordance among F1CDx, CCD1 and CCD2. For the F1CDx+ samples, concordance of F1CDx with CCD1 or CCD2 was better than concordance between the same platform tests CCD1 and CCD2; for the F1CDx- samples, F1CDx was more consistent in calling negative alterations than either CCD1 or CCD2.

Using the consensus calls between CCD1 and CCD2 as the reference standard, i.e. limiting analysis to only the samples in which CCD1 and CCD2 are in agreement, the results are shown below:

Table 27. Summary of concordance data using agreement between CCD1 and CCD2 as the reference.

	CCD1+/CCD2+	**CCD1-/CCD2-**
F1CDx+	101	3
F1CDx-	12	180

Based on these results, PPA is 89.4% (101/113) (95% CI [82.2%, 94.4%]) and NPA is 98.4% (180/183) (95% CI [95.3%, 99.7%]).

3.4 FoundationOne CDx™ Concordance Study for *ALK*

Clinical validity of FoundationOne CDx™ (F1CDx) as a companion diagnostic device used to identify non-small cell lung cancer (NSCLC) patients eligible for treatment with approved *ALK*-directed therapies including Alecensa® (alectinib), X*ALK*ori® (crizotinib), or Zykadia® (ceritinib) was established. The study was performed using 175 tumor samples from patients with histologically-confirmed NSCLC including enrolled patients as well as screen failures from the clinical trial NCT02075840, Roche study number BO28984 (also known as the ALEX study), which is a randomized, active controlled, multicenter phase III open-label study designed to evaluate the efficacy and safety of alectinib compared with crizotinib treatment in participants with treatment-naïve *ALK* rearrangement positive advanced NSCLC. The *ALK* diagnostic results from the F1CDx panel were compared against those obtained from the FDA approved Ventana *ALK* (D5F3) CDx Assay ("Ventana IHC", Ventana Medical Systems, Inc.) and Vysis *ALK* Break-Apart FISH Probe Kit ("Vysis FISH", Abbott Molecular). The Vysis FISH assay results used were obtained from the ALEX study. In this concordance study, the majority of the samples were from the IU population of the clinical trial NCT02075840. The concordance results are summarized in Table 28 below.

Table 28. Concordance Table with CCD1, CCD2 and F1CDx results with eligible samples

	CCD1 +			**CCD1 -**		
	CCD2 +	CCD2 -	Total	CCD2 +	CCD2 -	Total
F1CDx +	78	1	79	3	0	3
F1CDx -	6*	7	13	5	75	80
Total	84	8	92	8	75	83

*Two samples harbored *ALK* rearrangements that were detected by F1CDx but were classified as negative based on the study protocol.

The Venn diagrams for samples tested positive or negative for *ALK*-rearrangement mutation in all three assays (F1CDx, CCD1 and CCD2) are shown in Figure 5.

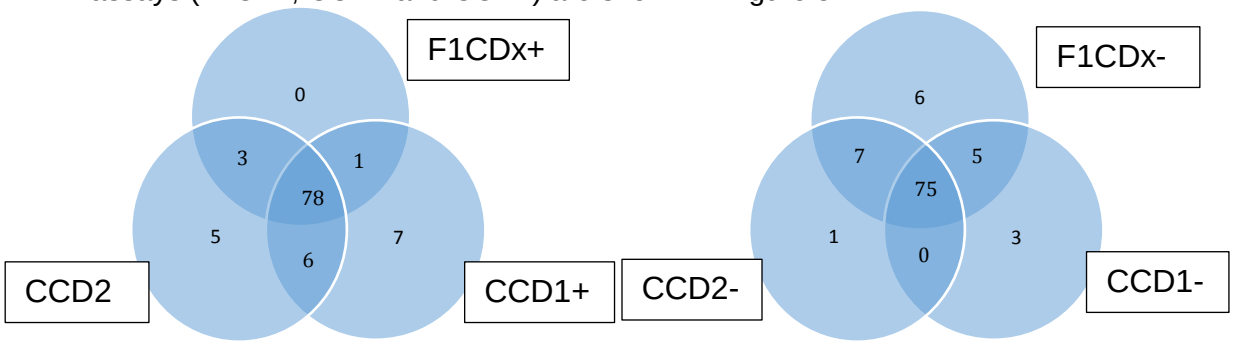

Figure 5. Venn Diagrams for *ALK*-rearrangement positive (left panel) and negative (right panel) samples.

These two Venn diagrams illustrate concordance among F1CDx, CCD1 and CCD2. A number of samples with discordant results between CCD1 and CCD2 were observed. This is expected because Vysis FISH Assay (CCD2) is a technology that probes at the DNA level while Ventana *ALK* IHC assay examines protein expression. When samples that were discordant between CCD1 and CCD2 were excluded, the concordance between F1CDx+ with CCD1+ and CCD2+ samples was superior to concordance between CCD1+ and CCD2+ samples. For the F1CDx- samples, F1CDx was more consistent in calling negative alterations than either CCD1 or CCD2.

Using the consensus calls between CCD1 and CCD2 as the reference standard, i.e. limiting analysis to only the samples in which CCD1 and CCD2 are in agreement, the results are shown below:

Table 29. Summary of concordance data using agreement between CCD1 and CCD2 as the reference.

	CCD1+/CCD2+	CCD1-/CCD2-
F1CDx+	78	0
F1CDx-	6*	75

*Two samples harbored *ALK* rearrangements that were detected by F1CDx but were classified as negative based on the study protocol.

Based on these results, PPA is 92.9% (78/84) (95% CI [85.1%, 97.3%]) and NPA is 100% (75/75) (95% CI [95.2%, 100.0%]).

3.5 FoundationOne CDx™ Concordance Study for *KRAS*

Clinical validity of FoundationOne CDx™ (F1CDx) as a companion diagnostic device used to identify colorectal cancer patients that may not benefit from certain *EGFR* inhibitor treatments, including Erbitux® (cetuximab) or Vectibix® (panitumumab), due to alterations in *KRAS*. The study was performed using 342 retrospective samples obtained from patients with advanced front-line or later-line colorectal cancer (CRC). Samples used in this study underwent pre-screening using the FoundationOne laboratory developed test (F1 LDT) or prescreening by an external vendor to enrich for positive samples. The prescreen failure rate using the F1 LDT was 3.7% and is unknown for the external vendor. The *KRAS* diagnostic results from the F1CDx assay were compared against those obtained from the approved therascreen® *KRAS* RGQ PCR Kit (Qiagen). The samples used for this study were not obtained from a clinical trial and had limited demographic data available. For this study age, gender and ethnicity data were available. Age and gender characteristics were found to be similar between the F1CDx concordance study and the pivotal studies, with the percentage of male samples in the concordance study being slightly lower compared to the pivotal studies (CRYSTAL and PRIME). Concordance data are summarized in Table 30 below.

Table 30. Concordance Table with CCD1, CCD2 and F1CDx results with eligible samples.

	CCD1+				CCD1-			
	CCD2+	CCD2-	CCD2 missing	Total	CCD2+	CCD2-	CCD2 missing	Total
F1CDx+	173	0	2	175	0	0	0	0
F1CDx-	0	2	0	2	1	154	7	162
F1CDx Missing	0	0	0	0	0	3	0	3
Total	173	2	2	177	1	157	7	165

Twelve (12) samples are assigned as missing data, including 3 samples with missing data in F1CDx and 9 samples with missing data in CCD2.

The prevalence of the *KRAS* mutation in the IU population is based on the CRYSTAL study for cetuximab (35.6%) and PRIME study for panitumumab (40%). The key statistics of PPA and NPA between F1CDx and the two replicates of the therascreen® assay (CCD1 and CCD2) were estimated based on the result in Table 31. Multiple imputation was used to impute the missing data and showed that missing data did not impact study conclusions. The summary statistics of age and sex were highly similar to the estimates from the pivotal trial CRYSTAL (for cetuximab) and PRIME (for panitumumab) studies.

By defining the reference standard as the consensus calls between CCD1 and CCD2, F1CDx achieved a PPA of 100% (173/173) (95% CI [97.9%, 100.0%]) and NPA of 100% (154/154) (95% CI [97.6%, 100.0%]).

Table 31. Summary of concordance data using agreement between CCD1 and CCD2 as the reference.

	CCD1+/CCD2+	CCD1-/CCD2-
F1CDx+	173	0
F1CDx-	0	154

3.6 FoundationOne CDx™ Concordance Study for *BRAF*

Clinical validity of the FoundationOne CDx™ (F1CDx) as a companion diagnostic device used to identify melanoma patients that may be eligible for treatment with approved *BRAF*-directed therapies was established. The study was performed using 305 retrospective samples obtained from patients with advanced melanoma. 157 samples used in this study underwent pre-screening using the FoundationOne laboratory developed test (F1 LDT) and 27 were prescreened by an external vendor to enrich for positive samples. The prescreen failure rate using the F1 LDT was 3.7% and is unknown for the external vendor. The *BRAF* diagnostic results from the F1CDx assay were compared against those obtained from the approved **cobas**® *BRAF* V600 mutation test (Roche Molecular Systems, Inc). These samples were not obtained from a clinical trial and had demographic data limited to age and gender. The distributions of age and gender to the intended use population (BRIM-3 trial) was found to be comparable.

Concordance analysis showed that the upper bounds of 95% one-sided Confidence Interval (CI) were below 20% for all four NI hypothesis tests. Thus, it can be concluded with 95% confidence that the differences of results between F1CDx and **cobas**® assays are less than 20%, the non-inferiority (NI) margin. Concordance results are summarized in Table 32 below.

Table 32. Concordance Table with CCD1, CCD2 and F1CDx results with eligible samples

	CCD1+			**CCD1-**		
	CCD2+	CCD2-	Total	CCD2+	CCD2-	Total
F1CDx+	166	0	166	3	14	17
F1CDx-	1	0	1	0	121	121
Total	167	0	167	3	135	138

Because the **cobas**® assay has lower sensitivity for detection of dinucleotide mutations, a separate analysis was conducted that included only eligible samples without dinucleotide mutations. A total of 273 (=305-32) samples were available for this analysis. The concordance results are summarized in Table 33.

Table 33. Concordance Table with CCD1, CCD2 and F1CDx results with eligible samples excluding samples with dinucleotide mutations detected by F1CDx

	CCD1+			**CCD1-**		
	CCD2+	CCD2-	Total	CCD2+	CCD2-	Total
F1CDx+	149	0	149	1	1*	2
F1CDx-	1**	0	1	0	121	121
Total	150	0	150	1	122	123

*QRF006472 was the only sample where both replicates of the **cobas**® assay reported negative results but F1CDx reported positive. The Allele Frequency of this sample was 3.45% with the computational tumor purity of 10%. According to Table 4 of the **cobas**® assay insert, the **cobas**® assay can correctly detect all *BRAF* V600E mutant specimens that have a minimum % mutant DNA above 5% and when the minimum tumor content is at least 15%. Thus, the discordance can be explained by F1CDx's high sensitivity in the lower % mutant DNA and low tumor purity condition.

QRF006374 was the only sample where both replicates of the **cobas® assay reported positive results but F1CDx reported negative. A mutation was recorded in the line data (Appendix 7) having protein effect V600_K601>E, which is a non-frameshift deletion of 3 nucleotides with CDS effect 1799_1801delTGA. This more complex mutation does result in V600E, but because of annotation differences to the canonical V600E, it was called negative by F1CDx.

PPA and NPA were calculated by defining the reference standard as the consensus calls between CCD1 and CCD2. The observed performance of **cobas**® has lower sensitivity for detection of dinucleotide V600 alterations (including V600K) than the single nucleotide V600E 1799T>A alteration, particularly at allele frequency below 40% detected by F1CDx, therefore, the data presented will include PPA/NPA results both with both alterations as the study was designed, as well as for V600E only in Table 34. A study using the THxID™ *BRAF* kit (bioMérieux) was conducted using 29 samples with *BRAF* V600 dinucleotide mutation detected by F1CDx and 29 negative samples to provide a better evaluation of V600 dinucleotide concordance. Out of the 51 samples with valid results from the THxID™ *BRAF* kit (Table 35), there was only one discordant result (F1CDx-/THxID+), achieving a PPA of 96.3% (26/27) (95% CI [81.0%, 99.9%]) and NPA of 100% (24/24) (95% CI [85.8%, 100.0%]).

Table 34. PPA and NPA for *BRAF* V600 detection with cobas®.

	PPA	NPA
All V600 alterations	99.4% (166/167)	89.6% (121/135)
Single nucleotide V600E (1799T>A)	99.3% (149/150)	99.2% (121/122)

Table 35. Concordance of *BRAF* dinucleotide samples with THxID™ *BRAF* kit.

Dinucleotide Samples	THxID+	THxID-	Total
F1CDx+	26	0	26
F1CDx-	1	24	25
Total	27	24	51

3.7 FoundationOne CDx™ Concordance with FoundationFocus CDx$_{BRCA}$ for *BRCA1*and *BRCA2.*

FoundationOne CDx™ (F1CDx) and FoundationFocus CDx$_{BRCA}$ use the same reagents, equipment and procedures with exception of the allowance for a broader range of DNA input into library construction and incremental enhancements to the analysis pipeline for F1CDx. The two changes were shown to have no impact on assay performance through the guard band study which included ovarian tissue and a comprehensive validation of the analysis pipeline which included robust regression testing and reanalysis of FoundationFocus CDx$_{BRCA}$ clinical bridging sample data. As such, the assays were determined to be concordant. Details for the clinical study in which the assay was shown to be effective in identify patients with ovarian cancer that may benefit from rucaparib treatment can be found in the Summary of Safety and Effectiveness Data for PMA P160018.

3.8 Summary of Clinical Concordance Studies

A summary of clinical concordance study results is included in Table 36 below. The reference standard used to calculate positive percent agreement (PPA) and negative percent agreement (NPA) below is defined as the consensus calls between the two comparator methods or comparator runs. Agreement calculations solely using consensus calls may overestimate the performance of F1CDx.

Table 36. Summary of PPA and NPA for CDx Concordance Studies

Biomarker	PPA	NPA	Comparator Method
EGFR exon 19 deletions and L858R	98.1% (106/108)	99.4% (153/154)	**cobas**® *EGFR* Mutation Test v2
EGFR T790M	98.9% (87/88)	86.1% (93/108)	**cobas**® *EGFR* Mutation Test v1 **cobas**® *EGFR* Mutation Test v2
ALK rearrangements	92.9% (78/84)	100% (75/75)	Ventana *ALK* (D5F3) CDx Assay Vysis *ALK* Break-Apart FISH Probe Kit
KRAS	100% (173/173)	100% (154/154)	therascreen® KRAS RGQ PCR Kit

Biomarker	PPA	NPA	Comparator Method
ERBB2(HER2) Amplifications	89.4% (101/113)	98.4% (180/183)	Dako HER2 FISH PharmDx® Kit
BRAF V600	99.4% (166/167)	89.6% (121/135)*	**cobas**® *BRAF* V600 Mutation Test
BRAF V600E	99.3% (149/150)	99.2% (121/122)	**cobas**® *BRAF* V600 Mutation Test
BRAF V600 dinucleotide**	96.3% (26/27)	100% (24/24)	THxID™ *BRAF* kit

* Sensitivity of dinucleotide detection of *BRAF* V600K and V600E was found to be significantly reduced in **cobas**® test, in particular for samples in which F1CDx detected the dinucleotides to be of lower than 40% MAF, leading to low NPA values.

** A study using the THxID™ *BRAF* kit (bioMérieux) was conducted with samples with *BRAF* V600 dinucleotide mutation detected by F1CDx and *BRAF* V600 negative samples to provide a better evaluation of V600 dinucleotide concordance.

6. References

1. Li M. Statistical Methods for Clinical Validation of Follow-On Companion Diagnostic Devices via an External
2. Kimura H., Ohira T., Uchida O., et al. Analytical performance of the **cobas** *EGFR* mutation assay for Japanese non-small-cell lung cancer. Lung Cancer 83, 329-333 (2014).
3. Lopez-Rios F., Angulo B., Gomez B., et al. Comparison of molecular testing methods for the detection of *EGFR* mutations in formalin-fixed paraffin-embedded tissue specimens of non-small cell lung cancer. J Clin Pathol 66, 381–385 (2013).
4. Wong AT, To RM, Wong CL, et al. Evaluation of 2 Real-Time PCR Assays for In Vitro Diagnostic Use in the Rapid and Multiplex Detection of *EGFR* Gene Mutations in NSCLC. Diagn Mol Pathol 22, 138-43 (2013).
5. Press et al., HER2 Gene Amplification Testing by Fluorescent In Situ Hybridization (FISH): Comparison of the ASCO-College of American Pathologists Guidelines With FISH Scores Used for Enrollment in Breast Cancer International Research Group Clinical Trials, J Clin Oncol 34:3518-3528, 2016
6. Dowsett, M. et al, Disease-Free Survival According to Degree of HER2 Amplification for Patients Treated with Adjuvant Chemotherapy With or Without 1 Year of Trastuzumab: The HERA Trial, J Clin Oncol 27:2962-2969, 2009

Specimen Instructions

FOUNDATIONONE CDx™

FoundationOne CDx™ is a broad companion diagnostic (CDx) test for five tumor indications. In addition to use as a companion diagnostic, F1CDx provides cancer relevant alterations that may inform patient management in accordance with professional guidelines. Information generated by this test is an aid in the identification of patients who are most likely to benefit from associated therapeutic products as noted in Table 1 of the Intended Use.[1]

Acceptable Samples

- Formalin-fixed paraffin embedded (FFPE) specimens, including cut slide specimens are acceptable.
- Use standard fixation methods to preserve nucleic acid integrity. 10% neutral-buffered formalin for 6–72 hours is industry standard. DO NOT use other fixatives (Bouins, B5, AZF, Holland's).
- Do not decalcify.

SAMPLE SIZE

1 When feasible, please send the block + 1 H&E slide.*

10 unstained slides (positively charged and unbaked at 4-5 microns thick) + 1 H&E slide.*

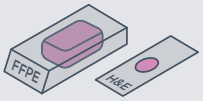

OR

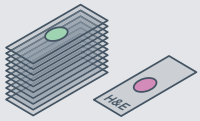

**For smaller samples, providing the original H&E will preserve material for testing.*

SURFACE AREA

2 **MINIMUM: 25 mm²**

If sending slides, provide 10 unstained slides cut at 4-5 microns thick to achieve a tissue volume of 1 mm³.**

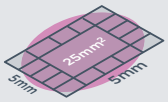

***Specimens with a smaller surface area may meet volume requirements by submitting additional unstained slides (USS) or block.*

TUMOR CONTENT

3 **OPTIMUM: 30% TN** **MINIMUM: 20% TN**

Percent tumor nuclei (%TN) = number of tumor cells divided by total number of all cells with nuclei

Note for liver specimens: higher tumor content may be required because hepatocyte nuclei have twice the DNA content of other somatic nuclei

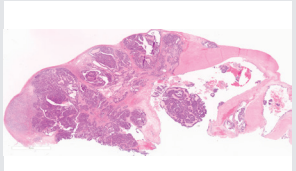

Resection

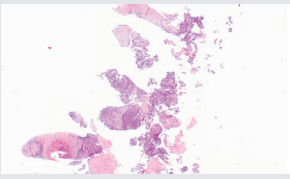

Small Biopsy

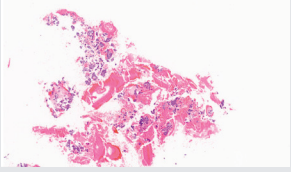

Fine-Needle Aspiration (Cell Block)

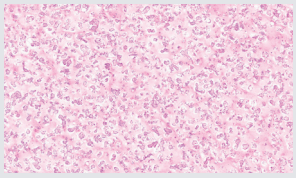

Fluid Exfoliative Cytology (Cell Block)

Shipping Instructions

1. Place the samples, FoundationOne CDx™ requisition form, insurance information, and any other attachments into the FoundationOne CDx Specimen Shipping Kit.
2. Place the specimen shipping kit (including samples and paperwork) into the provided FedEx shipping pack, first ensuring that primary specimen containers (e.g. blocks, slides) are labeled with two patient-specific identifiers. Seal the shipping pack.
3. Complete the pre-printed shipping labels (if necessary) and apply to shipping pack.
4. Call 800.463.3339 to request a pick-up or drop the package at your site's designated FedEx pick-up location and ship sealed shipping pack to:

Foundation Medicine, Inc.
150 Second Street
Cambridge, MA 02141
Phone: 888.988.3639

© 2017 Foundation Medicine, Inc. | FoundationOne CDx™ is a trademark of Foundation Medicine, Inc.

Intended Use

FoundationOne CDx™ (F1CDx) is a next generation sequencing based *in vitro* diagnostic device for detection of substitutions, insertion and deletion alterations (indels), and copy number alterations (CNAs) in 324 genes and select gene rearrangements, as well as genomic signatures including microsatellite instability (MSI) and tumor mutational burden (TMB) using DNA isolated from formalin-fixed paraffin embedded (FFPE) tumor tissue specimens. The test is intended as a companion diagnostic to identify patients who may benefit from treatment with the targeted therapies listed in Table 1 in accordance with the approved therapeutic product labeling. Additionally, F1CDx is intended to provide tumor mutation profiling to be used by qualified health care professionals in accordance with professional guidelines in oncology for patients with solid malignant neoplasms. The F1CDx assay is a single-site assay performed at Foundation Medicine, Inc.

Table 1: Companion diagnostic indications

INDICATIONS	BIOMARKER	FDA-APPROVED THERAPY*
Non-Small Cell Lung Cancer (NSCLC)	*EGFR* exon 19 deletions and *EGFR* exon 21 L858R alterations	Gilotrif® (afatinib), Iressa® (gefitinib), or Tarceva® (erlotinib)
	EGFR exon 20 T790M alterations	Tagrisso® (osimertinib)
	ALK rearrangements	Alecensa® (alectinib), Xalkori® (crizotinib), or Zykadia® (ceritinib)
	BRAF V600E	Tafinlar® (dabrafenib) in combination with Mekinist® (trametinib)
Melanoma	*BRAF* V600E	Tafinlar® (dabrafenib) or Zelboraf® (vemurafenib)
	BRAF V600E and V600K	Mekinist® (trametinib) or Cotellic® (cobimetinib), in combination with Zelboraf® (vemurafenib)
Breast Cancer	*ERBB2* (HER2) amplification	Herceptin® (trastuzumab), Kadcyla® (ado-trastuzumab-emtansine), or Perjeta® (pertuzumab)
Colorectal Cancer	*KRAS* wild-type (absence of mutations in codons 12 and 13)	Erbitux® (cetuximab)
	KRAS wild-type (absence of mutations in exons 2, 3 and 4) and *NRAS* wild-type (absence of mutations in exons 2, 3 and 4)	Vectibix® (panitumumab)
Ovarian Cancer	*BRCA1/2* alterations	Rubraca® (rucaparib)

Reference

1. For full information on the intended use, assay descriptions, and for detailed performance specifications, refer to the complete FoundationOne CDx label at *www.foundationmedicine.com/f1cdx*.

* Tarceva® is the registered trademark of OSI Pharmaceuticals, LLC. Zelboraf®, Herceptin®, Perjeta®, Kadcyla®, and Cotellic® are registered trademarks of Genentech, Inc. Gilotrif® is a registered trademark of Boehringer Ingelheim International GmbH. Iressa® and Tagrisso® are registered trademarks of the AstraZeneca group of companies. Xalkori® is a registered trademark of Pfizer Inc. Zykadia®, Tafinlar®, and Mekinist® are registered trademarks of Novartis AG Corporation Switzerland. Erbitux® is a registered trademark of ImClone LLC, a wholly owned subsidiary of Eli Lilly and Company. Alecensa® is a registered trademark of Chugai Seiyaku Kabushiki Kaisha. Vectibix® is a registered trademark of Immunex Corporation. Rubraca® is a registered trademark of Clovis Oncology, Inc.

FOUNDATION MEDICINE®

© 2017 Foundation Medicine, Inc. | FoundationOne CDx™ is a trademark of Foundation Medicine, Inc.

www.foundationmedicine.com | Tel. 888.988.3639 | Fax 617.418.2290 | MKT-0082-01

PATIENT

DISEASE Breast invasive ductal carcinoma (IDC)
NAME Not Given
DATE OF BIRTH Not Given
SEX Female
MEDICAL RECORD # Not Given

PHYSICIAN

ORDERING PHYSICIAN Not Given
MEDICAL FACILITY Not Given
ADDITIONAL RECIPIENT Not Given
MEDICAL FACILITY ID Not Given
PATHOLOGIST Not Given

SPECIMEN

SPECIMEN SITE Not Given
SPECIMEN ID Not Given
SPECIMEN TYPE Not Given
DATE OF COLLECTION Not Given
SPECIMEN RECEIVED Not Given

CDx Associated Findings

GENOMIC FINDINGS DETECTED	FDA-APPROVED THERAPEUTIC OPTIONS
Not detected †	

† *An* ERBB2 *amplification of copy number 4 was detected. While this result is considered negative by F1CDx, in a clinical concordance study with an FDA-approved FISH test, 70% (7 out of 10 samples) with copy number 4 were positive with an average ratio of 2.3, and 30% (3 out 10 samples) were negative by the FISH test. The frequency of* ERBB2 *with copy number 4 in breast cancer is estimated to be approximately 2%. Testing with an alternative FDA-approved companion diagnostic should be performed for confirmatory testing.*

Other Alterations & Biomarkers Identified

Results reported in this section are not prescriptive or conclusive for labeled use of any specific therapeutic product. See professional services section for additional information.

GENOMIC FINDINGS WITH EVIDENCE OF CLINICAL SIGNIFICANCE

Clinical evidence consistent with clinical professional guidelines has been associated with biomarkers listed in this section.

MET amplification§

GENOMIC FINDINGS WITH POTENTIAL CLINICAL SIGNIFICANCE

Clinical significance has not been demonstrated in professional guidelines or with this test for alterations in this section.

Microsatellite status MS-Stable§
Tumor Mutation Burden 3 Muts/Mb§
C17orf39 amplification§
CDKN2A/B loss§
TOP2A amplification§
TP53 R248Q

§ Refer to appendix for limitation statements related to detection of any copy number alterations, gene rearrangements, MSI or TMB result in this section.

Please refer to appendix for Explanation of Clinical Significance Classification and for variants of unknown significance (VUS).

FoundationOne CDx™ (F1CDx) is a next generation sequencing based in vitro diagnostic device for detection of substitutions, insertion and deletion alterations (indels), and copy number alterations (CNAs) in 324 genes and select gene rearrangements, as well as genomic signatures including microsatellite instability (MSI) and tumor mutational burden (TMB) using DNA isolated from formalin-fixed paraffin embedded (FFPE) tumor tissue specimens. The test is intended as a companion diagnostic to identify patients who may benefit from treatment with the targeted therapies listed in Table 1 in accordance with the approved therapeutic product labeling. Additionally, F1CDx is intended to provide tumor mutation profiling to be used by qualified health care professionals in accordance with professional guidelines in oncology for patients with solid malignant neoplasms. The F1CDx assay is a single-site assay performed at Foundation Medicine, Inc.

TABLE 1

INDICATION	BIOMARKER	THERAPY
Non-small cell lung cancer (NSCLC)	*EGFR* exon 19 deletions and *EGFR* exon 21 L858R alterations	Gilotrif® (Afatinib), Iressa® (Gefitinib), or Tarceva® (Erlotinib)
	EGFR exon 20 T790M alterations	Tagrisso® (Osimertinib)
	ALK rearrangements	Alecensa® (Alectinib), Xalkori® (Crizotinib), or Zykadia® (Ceritinib)
	BRAF V600E	Tafinlar® (Dabrafenib) in combination with Mekinist® (Trametinib)
Melanoma	*BRAF* V600E	Tafinlar® (Dabrafenib) or Zelboraf® (Vemurafenib)
	BRAF V600E or V600K	Mekinist® (Trametinib) or Cotellic® (Cobimetinib) in combination with Zelboraf® (Vemurafenib)
Breast cancer	*ERBB2* (HER2) amplification	Herceptin® (Trastuzumab), Kadcyla® (Ado-trastuzumab emtansine), or Perjeta® (Pertuzumab)
Colorectal cancer	*KRAS* wild-type (absence of mutations in codons 12 and 13)	Erbitux® (Cetuximab)
	KRAS wild-type (absence of mutations in exons 2, 3, and 4) and *NRAS* wild type (absence of mutations in exons 2, 3, and 4)	Vectibix® (Panitumumab)
Ovarian cancer	*BRCA1/2* alterations	Rubraca® (Rucaparib)

ABOUT THE TEST FoundationOne CDx™ is the first and only FDA-approved broad companion diagnostic for solid tumors.

Electronically Signed by Julia A. Elvin, M.D., Ph.D. • Jeffrey S. Ross, M.D., Medical Director • 30 November 2017
Foundation Medicine, Inc. • 1-888-988-3639

Sample Preparation: 150 Second St., 1st Floor, Cambridge, MA 02141 • CLIA: 22D2027531
Sample Analysis: 150 Second St., 1st Floor, Cambridge, MA 02141 • CLIA: 22D2027531

DRAFT

PATIENT

DISEASE Lung adenocarcinoma
NAME Not Given
DATE OF BIRTH Not Given
SEX Female
MEDICAL RECORD # Not Given

PHYSICIAN

ORDERING PHYSICIAN Not Given
MEDICAL FACILITY Not Given
ADDITIONAL RECIPIENT Not Given
MEDICAL FACILITY ID Not Given
PATHOLOGIST Not Given

SPECIMEN

SPECIMEN SITE Not Given
SPECIMEN ID Not Given
SPECIMEN TYPE Not Given
DATE OF COLLECTION Not Given
SPECIMEN RECEIVED Not Given

CDx Associated Findings

GENOMIC FINDINGS DETECTED		FDA-APPROVED THERAPEUTIC OPTIONS
EGFR	L858R	Gilotrif™ (Afatinib) Iressa™ (Gefitinib) Tarceva™ (Erlotinib)
	T790M‡	Tagrisso™ (Osimertinib)

‡ *An EGFR T790M alteration was detected with an allele fraction of <5%. Clinical performance of Tagrisso® (Osimertinib) in this patient population is ongoing.*

Other Alterations & Biomarkers Identified

Results reported in this section are not prescriptive or conclusive for labeled use of any specific therapeutic product. See professional services section for additional information.

GENOMIC FINDINGS WITH EVIDENCE OF CLINICAL SIGNIFICANCE

Clinical evidence consistent with clinical professional guidelines has been associated with biomarkers listed in this section.

EGFR amplification§

KRAS G12R

GENOMIC FINDINGS WITH POTENTIAL CLINICAL SIGNIFICANCE

Clinical significance has not been demonstrated in professional guidelines or with this test for alterations in this section.

Microsatellite Status MS-Stable§

CDKN2A/B loss§

LRP1B C980*

PTCH1 T416S

RBM10 Q494*

TP53 amplification§

⚠ POTENTIAL RESISTANCE

Individual patient response to listed therapies may vary based on genomic profile and other factors. See *professional services* section for additional information including alteration association with potential resistance.

§ Refer to appendix for limitation statements related to detection of any copy number alterations, gene rearrangements, MSI or TMB result in this section.

Please refer to appendix for Explanation of Clinical Significance Classification and for variants of unknown significants (VUS).

DRAFT

ABOUT THE TEST FoundationOne CDx™ is the first and only FDA-approved broad companion diagnostic for solid tumors.

PATIENT

DISEASE Breast invasive ductal carcinoma (IDC)
NAME Not Given
DATE OF BIRTH Not Given
SEX Female
MEDICAL RECORD # Not Given

PHYSICIAN

ORDERING PHYSICIAN Not Given
MEDICAL FACILITY Not Given
ADDITIONAL RECIPIENT Not Given
MEDICAL FACILITY ID Not Given
PATHOLOGIST Not Given

SPECIMEN

SPECIMEN SITE Not Given
SPECIMEN ID Not Given
SPECIMEN TYPE Not Given
DATE OF COLLECTION Not Given
SPECIMEN RECEIVED Not Given

DRAFT

FoundationOne CDx™ (F1CDx) is a next generation sequencing based in vitro diagnostic device for detection of substitutions, insertion and deletion alterations (indels), and copy number alterations (CNAs) in 324 genes and select gene rearrangements, as well as genomic signatures including microsatellite instability (MSI) and tumor mutational burden (TMB) using DNA isolated from formalin-fixed paraffin embedded (FFPE) tumor tissue specimens. The test is intended as a companion diagnostic to identify patients who may benefit from treatment with the targeted therapies listed in Table 1 in accordance with the approved therapeutic product labeling. Additionally, F1CDx is intended to provide tumor mutation profiling to be used by qualified health care professionals in accordance with professional guidelines in oncology for patients with solid malignant neoplasms. The F1CDx assay is a single-site assay performed at Foundation Medicine, Inc.

TABLE 1

INDICATION	BIOMARKER	THERAPY
Non-small cell lung cancer (NSCLC)	*EGFR* exon 19 deletions and *EGFR* exon 21 L858R alterations	Gilotrif® (Afatinib), Iressa® (Gefitinib), or Tarceva® (Erlotinib)
	EGFR exon 20 T790M alterations	Tagrisso® (Osimertinib)
	ALK rearrangements	Alecensa® (Alectinib), Xalkori® (Crizotinib), or Zykadia® (Ceritinib)
	BRAF V600E	Tafinlar® (Dabrafenib) in combination with Mekinist® (Trametinib)
Melanoma	*BRAF* V600E	Tafinlar® (Dabrafenib) or Zelboraf® (Vemurafenib)
	BRAF V600E or V600K	Mekinist® (Trametinib) or Cotellic® (Cobimetinib) in combination with Zelboraf® (Vemurafenib)
Breast cancer	*ERBB2* (HER2) amplification	Herceptin® (Trastuzumab), Kadcyla® (Ado-trastuzumab emtansine), or Perjeta® (Pertuzumab)
Colorectal cancer	*KRAS* wild-type (absence of mutations in codons 12 and 13)	Erbitux® (Cetuximab)
	KRAS wild-type (absence of mutations in exons 2, 3, and 4) and *NRAS* wild type (absence of mutations in exons 2, 3, and 4)	Vectibix® (Panitumumab)
Ovarian cancer	*BRCA1/2* alterations	Rubraca® (Rucaparib)

ABOUT THE TEST FoundationOne CDx™ is the first and only FDA-approved broad companion diagnostic for solid tumors.

Electronically Signed by Julia A. Elvin, M.D., Ph.D. • Jeffrey S. Ross, M.D., Medical Director • 30 November 2017
Foundation Medicine, Inc. • 1-888-988-3639

Sample Preparation: 150 Second St., 1st Floor, Cambridge, MA 02141 • CLIA: 22D2027531
Sample Analysis: 150 Second St., 1st Floor, Cambridge, MA 02141 • CLIA: 22D2027531

TEST PRINCIPLE

FoundationOne CDx will be performed exclusively as a laboratory service using DNA extracted from formalin-fixed, paraffin-embedded (FFPE) tumor samples. The proposed assay will employ a single DNA extraction method from routine FFPE biopsy or surgical resection specimens, 50-1000 ng of which will undergo whole-genome shotgun library construction and hybridization-based capture of all coding exons from 309 cancer-related genes, one promoter region, one non-coding (ncRNA), and select intronic regions from 34 commonly rearranged genes, 21 of which also include the coding exons. The assay therefore includes detection of alterations in a total of 324 genes. Using the Illumina® HiSeq 4000 platform, hybrid capture–selected libraries will be sequenced to high uniform depth (targeting >500X median coverage with >99% of exons at coverage >100X). Sequence data will be processed using a customized analysis pipeline designed to accurately detect all classes of genomic alterations, including base substitutions, indels, focal copy number amplifications, homozygous gene deletions, and selected genomic rearrangements (e.g., gene fusions). Additionally, genomic signatures including microsatellite instability (MS) and tumor mutational burden (TMB) will be reported.

PERFORMANCE CHARACTERISTICS

Please refer to product label:
foundationmedicine.com/f1cdx

LIMITATIONS

1. For *in vitro* diagnostic use.
2. For prescription use only. This test must be ordered by a qualified medical professional in accordance with clinical laboratory regulations
3. Genomic findings other than those listed in Table 1 of the intended use are not prescriptive or conclusive for labeled use of any specific therapeutic product.
4. A negative result does not rule out the presence of a mutation below the limits of detection of the assay.
5. Samples with <25% tumor may have decreased sensitivity for the detection of CNAs including *ERBB2*
6. Clinical performance of Tagrisso® (osimertinib) in patients with an *EGFR* exon 20 T790M mutation detected with an allele fraction <5% is ongoing and has not been established.
7. Concordance with other validated methods for CNA (with the exception of *ERBB2*) and gene rearrangement (with the exception of *ALK*) detection has not been demonstrated and will be provided in the post-market setting. Confirmatory testing using a clinically validated assay should be performed for all CNAs and rearrangements not associated with CDx claims noted in Table 1 of the Intended Use, but used for clinical decision making.
8. The MSI-H/MSS designation by FMI F1CDx test is based on genome wide analysis of 95 microsatellite loci and not based on the 5 or 7 MSI loci described in current clinical practice guidelines. Refer to the Summary of Safety of Effectiveness Data (SSED) for additional details on methodology. The threshold for MSI-H/MSS was determined by analytical concordance to comparator assays (IHC and PCR) using uterine, cecum and colorectal cancer FFPE tissue. The clinical validity of the qualitative MSI designation has not been established.
9. TMB by F1CDx is defined based on counting the total number of all synonymous and non-synonymous variants present at 5% allele frequency or greater (after filtering) and reported as mutations per megabase (mut/Mb) unit. The clinical validity of TMB defined by this panel has not been established.
10. Decisions on patient care and treatment must be based on the independent medical judgment of the treating physician, taking into consideration all applicable information concerning the patient's condition, such as patient and family history, physical examinations, information from other diagnostic tests, and patient preferences, in accordance with the standard of care in a given community.
11. The test is intended to be performed on specific serial number-controlled instruments by Foundation Medicine, Inc.

INTENDED USE

FoundationOne CDx™ (F1CDx) is a next generation sequencing based in vitro diagnostic device for detection of substitutions, insertion and deletion alterations (indels), and copy number alterations (CNAs) in 324 genes and select gene rearrangements, as well as genomic signatures including microsatellite instability (MSI) and tumor mutational burden (TMB) using DNA isolated from formalin-fixed paraffin embedded (FFPE) tumor tissue specimens. The test is intended as a companion diagnostic to identify patients who may benefit from treatment with the targeted therapies listed in Table 1 in accordance with the approved therapeutic product labeling. Additionally, F1CDx is intended to provide tumor mutation profiling to be used by qualified health care professionals in accordance with professional guidelines in oncology for patients with solid malignant neoplasms. The F1CDx assay is a single-site assay performed at Foundation Medicine, Inc.

INDICATION	GENOMIC FINDINGS	THERAPY
Non-small cell lung cancer (NSCLC)	*EGFR* exon 19 deletions and *EGFR* exon 21 L858R alterations	Gilotrif® (Afatinib), Iressa® (Gefitinib), or Tarceva® (Erlotinib)
	EGFR exon 20 T790M alterations	Tagrisso® (Osimertinib)
	ALK rearrangements	Alecensa® (Alectinib), Xalkori® (Crizotinib), or Zykadia® (Ceritinib)
	BRAF V600E	Tafinlar® (Dabrafenib) in combination with Mekinist® (Trametinib)
Melanoma	*BRAF* V600E	Tafinlar® (Dabrafenib) or Zelboraf® (Vemurafenib)
	BRAF V600E or V600K	Mekinist® (Trametinib) or Cotellic® (Cobimetinib) in combination with Zelboraf® (Vemurafenib)
Breast cancer	*ERBB2* (HER2) amplification	Herceptin® (Trastuzumab), Kadcyla® (Ado-trastuzumab emtansine), or Perjeta® (Pertuzumab)
Colorectal cancer	*KRAS* wild-type (absence of mutations in codons 12 and 13)	Erbitux® (Cetuximab)
	KRAS wild-type (absence of mutations in exons 2, 3, and 4) and *NRAS* wild type (absence of mutations in exons 2, 3, and 4)	Vectibix® (Panitumumab)
Ovarian cancer	*BRCA1/2* alterations	Rubraca® (Rucaparib)

TABLE 1

The median exon coverage for this sample is 733X