Summary of Safety and Effectiveness Data

1.0 General Information

Device Generic Name:	Endovascular Graft and Delivery System
Device Trade Name:	Powerlink® System
Applicant's Name and Address:	Endologix, Inc. 13900 Alton Parkway, Suite #122 Irvine, CA 92618
PMA Application Number:	P040002
Date of Panel Recommendation:	None
Date of Notice of Approval to the Applicant:	OCT 29 2004

2.0 Indications and Use

Powerlink System Bifurcated:

The Powerlink System Bifurcated models and Proximal Cuff and Limb Extension accessories are indicated for endovascular treatment in patients with AAA. It is indicated for patients with suitable aneurysm morphology for endovascular repair, including:

Adequate iliac/femoral access compatible with the required delivery systems (a diameter of ≥ 7 mm)

Non-aneurysmal aortic neck between the renal arteries and the aneurysm:

- with a length of ≥ 15 mm
- with a diameter of ≥ 18 mm and ≤ 26 mm (main body)
- with a neck angle of ≤ 60° to the body of the aneurysm.

Aortic length ≥ 1.0 cm longer than the body portion of the chosen bifurcated model.

Common iliac artery distal fixation site:

- with a distal fixation length of ≥ 15 mm
- with ability to preserve at least one hypogastric artery
- with a diameter of ≥ 10 mm and ≤ 14 mm (limbs)
- with an iliac angle of ≤ 90° to the aortic bifurcation.

Powerlink System Proximal Cuff (Infrarenal):

The Powerlink System bifurcated models, proximal cuff and limb extension accessories are indicated for endovascular use in patients with AAA. The proximal cuff is used to treat intraoperative or late proximal Type I endoleaks or to extend the length of the main body of a bifurcated device to fit specific patient anatomy. It is indicated for patients with suitable aneurysm morphology for endovascular repair, including:

Adequate iliac/femoral access compatible with the required delivery systems (a diameter of ≥ 7 mm)

Non-aneurysmal aortic neck between the renal arteries and the aneurysm:

11

with a diameter of ≥ 18 mm and ≤ 26 mm
with a neck angle of ≤ 60° to the body of the aneurysm.
Ability to overlap the bifurcated stent graft by 15 to 20mm.

Powerlink System Limb Extension:

The Powerlink System bifurcated models, proximal cuff and limb extension accessories are indicated for endovascular use in patients with AAA. The Limb Extension is used to treat intraoperative or late distal Type I endoleaks or to extend the length of the limbs of a bifurcated device to fit specific patient anatomy. It is indicated for patients with suitable aneurysm morphology for endovascular repair, including:

Adequate iliac/femoral access compatible with the required delivery systems (a diameter of ≥ 7 mm)
Common iliac artery distal fixation site:
with ability to preserve at least one hypogastric artery
with a diameter of ≥ 10 mm and ≤ 18 mm
with an iliac angle of ≤ 90° to the aortic bifurcation.
Ability to overlap the bifurcated stent graft by 15 to 20mm.

3.0 Contraindications

There are no known contraindications for these devices.

4.0 Warnings and Precautions

See Warnings and Precautions in the labeling (Instructions for Use).

5.0 Device Description

The Powerlink System Bifurcated Infrarenal Stent Graft for AAA consists of two components: a unibody bifurcated stent graft of various sizes, and a 21 Fr delivery catheter. Additional accessory components are also available in various sizes. All of the components in the stent graft consist of commonly used materials, such as cobalt chromium alloy for the self-expanding stent cage; thin-walled, low porosity ePTFE graft material; and currently marketed polypropylene suture material. The main bifurcated stent graft is selected based upon patient anatomy and implanted to exclude the aneurysmal sac. The additional accessory components can be used to adjust for variations in the patient's anatomy, or to provide additional seal in difficult anatomies. These additional accessory components include proximal cuffs and limb extensions.

5.1 Powerlink Bifurcated Infrarenal Stent Graft

The Bifurcated Infrarenal Stent Graft (see Figure 1), consists of a unibody configuration (an aortic main body and two iliac legs), with the main body constructed from a single wire. This unibody configuration is manufactured in various standard sizes and is supplied sterile,

preloaded onto delivery systems, and ready for use with minimal pre-deployment preparation. The currently available bifurcated models are listed in Table 1.

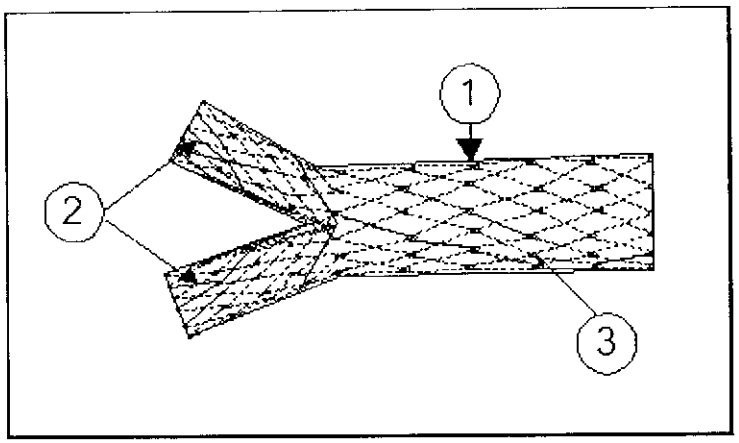

Figure 1. Powerlink Bifurcated Infrarenal Stent Graft

1 Main Body
2 Limbs
3 Stent Cage (internal)

The bifurcated unibody component is introduced via one iliac artery. The aortic main body of this component and both the ipsilateral iliac limb and contralateral iliac limb can all be deployed and placed through a cut down in one iliac artery and percutaneous access in the other iliac artery. The accessory components (refer to Section 5.2) can be used to provide additional length to the main bifurcated component.

Powerlink stent graft components are constructed using a thin-walled, low porosity ePTFE graft material sewn to the self-expanding cobalt chromium alloy stent with standard surgical polypropylene sutures. The graft material is attached to the stent only at the proximal and distal ends of the stent to minimize graft holes. The graft material is fully supported by the stent throughout its length to provide the stability and expansion force required for fixation and seal of the Powerlink AAA Stent Graft to the vessel wall. The Powerlink stent graft is highly visible during deployment.

Table 1. Bifurcated Infrarenal Stent Graft

Model No.	Main Body Diameter (mm)	Main Body Length (mm)	Limb Diameter (mm)	Limb Length (mm)	Delivery System Fr (no introducer needed)
25-16-135BL	25	80	16	55	21
25-16-155BL	25	100	16	55	21
25-16-140BL	25	100	16	40	21
28-16-135BL	28	80	16	55	21
28-16-155BL	28	100	16	55	21

28-16-140BL	28	100	16	40	21

5.2 Powerlink Stent Graft Accessory Components

The Powerlink Stent Graft accessory components consist of proximal cuffs and limb extensions. These can be used to provide additional length to the main bifurcated component, or to provide additional seal in difficult anatomies. The accessory components are shown in Figures 2 and 3.

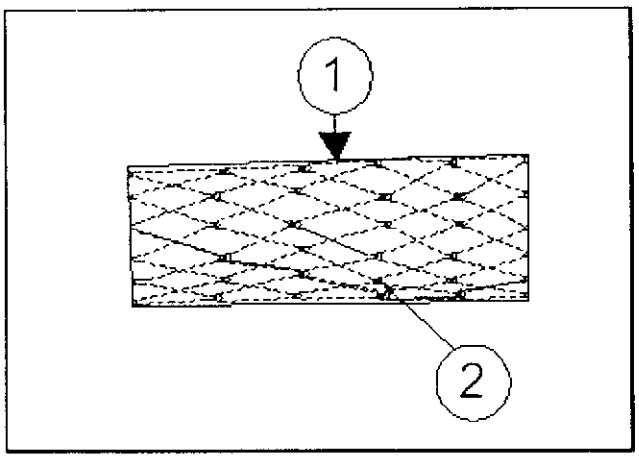

Figure 2. Proximal Cuff

1 Main Body
2 Stent Cage (internal)

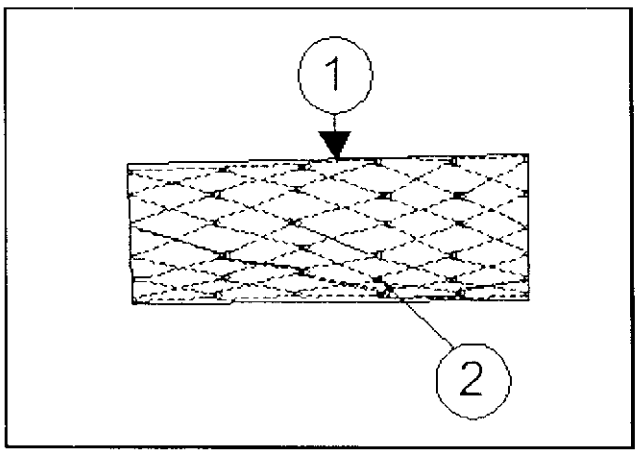

Figure 3. Limb Extension

1 Main Body
2 Stent Cage (internal)

Accessory components are manufactured in various standard sizes and are supplied sterile, preloaded onto their delivery systems, and ready for use with minimal pre-deployment preparation. Currently available accessory components are listed in Tables 2 and 3.

Table 2 Proximal Cuffs

Model No.	Cuff Diameter (mm)	Cuff Length (mm)	Delivery System Fr (no introducer needed)
25-25-55L	25	55	19
25-25-75L	25	75	19
28-28-55L	28	55	19
28-28-75L	28	75	19

Table 3 Limb Extensions

Model No.	Extension Diameter (mm)	Extension Length (mm)	Delivery System Fr (no introducer needed)
16-16-55L	16	55	17
16-16-88L	16	88	17
20-20-55L	20	55	17

5.3 Powerlink Delivery System Description

The Powerlink Bifurcated Infrarenal Stent Graft is supplied preloaded onto the 21 Fr Delivery System. The Delivery System is designed to provide a simple deployment method to provide accurate positioning of the stent graft, but also allows readjustment of the stent graft during deployment.

Accessory components of the Powerlink Stent Graft (proximal cuffs and limb extensions), are preloaded onto a straight delivery system, (19 and 17 Fr, respectively). All delivery systems (17, 19 and 21 Fr) are compatible with a 0.035 inch guidewire.

21 Fr Bifurcated Infrarenal Delivery System Description

The 21 Fr Bifurcated Infrarenal Delivery System is used to deploy all of the various sizes of the bifurcated stent graft (refer to Table 1, Section 5.1).

The delivery system contains a hub and sideport for flushing. The two proximal connectors contain key lock mechanisms which maintain rotational control of the endovascular stent graft, main body, and limbs with the delivery system during the deployment procedure.

15

Figure 4 depicts the delivery system configuration. The delivery system is a coaxial design with inner, middle and outer sheaths constraining the bifurcated stent graft in a compressed state. Each sheath creates a pocket for containment of the stent graft main body and limbs. The front sheath assembly contains the main body of the stent graft. As the pusher rod is advanced or outer sheath and middle core retracted, the stent graft is partially released, allowing the self-expanding main body of the stent graft to expand within the vessel. The outer sheath assembly contains the ipsilateral and contralateral limbs of the stent graft. Before final deployment of the main body of the stent graft, the contralateral limb cover wire is pulled, allowing the contralateral stent graft limb to self-expand. The pusher rod is then fully advanced to complete deployment of the main body. As the delivery catheter is retracted on the ipsilateral side, the ipsilateral limb cover is pulled, allowing the ipsilateral stent graft limb to self-expand.

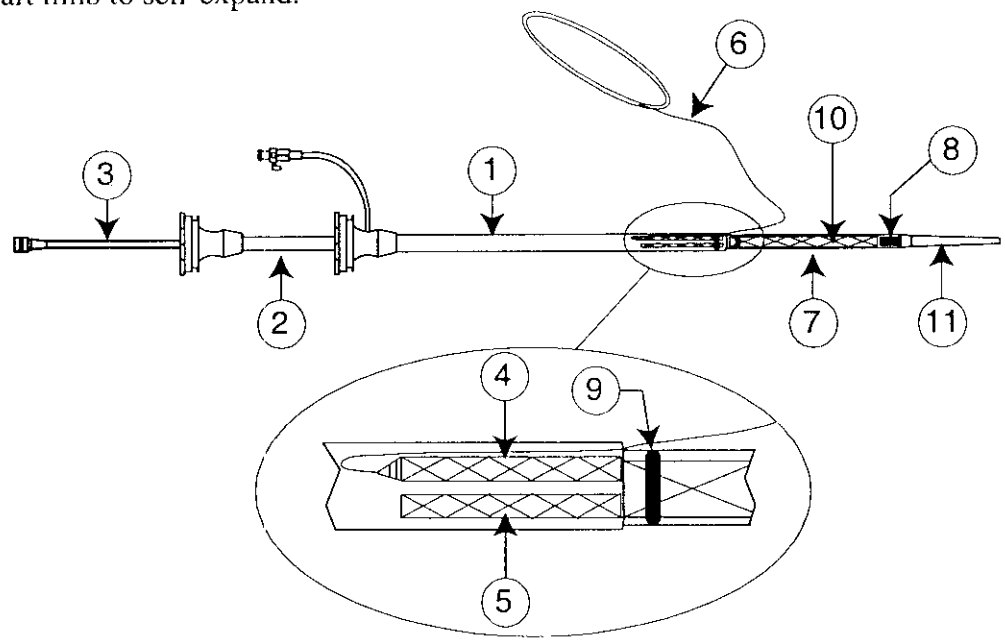

Figure 4. Powerlink Bifurcated Infrarenal Delivery System

1 Outer Sheath	7 Front Sheath (attached to Pusher Rod)
2 Middle Core	8 Radiopaque Front Stop (attached to Middle Core)
3 Pusher Rod	9 Radiopaque Marker (marks Caudal end of Front Sheath)
4 Contralateral Limb Cover	10Stent Graft Main Body
5 Ipsilateral Limb Cover (attached to Middle Core)	11Radiopaque Tip
6 Device Limb Wire & Hoop (attached to Contralateral Limb Cover)	

Straight Delivery System Description

The 17 and 19 Fr Straight Delivery Systems are used to deploy all of the various sizes of the accessory components: limb extensions and proximal cuffs, respectively (refer to Tables 2 and 3, Section 5.1). The delivery system contains a hub and sideport for flushing.

Figure 5 depicts the 17 and 19 Fr delivery system configurations. The delivery system is a coaxial design with an outer sheath constraining the accessory stent graft in a compressed state. As the outer sheath is retracted, the accessory stent graft is pushed out and the constraint removed, allowing the self-expanding accessory stent graft to expand within the vessel.

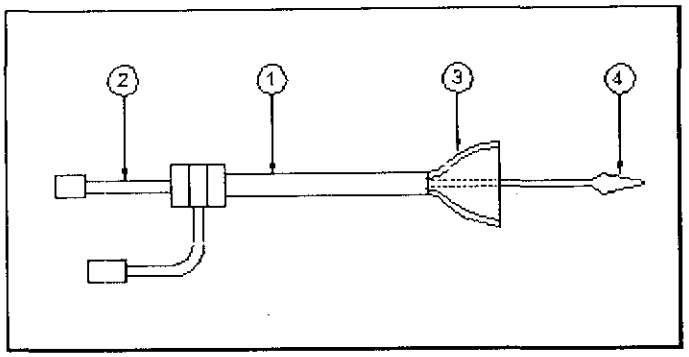

Figure 5. Powerlink Straight Delivery System

1 Outer Sheath	3 Stent Graft
2 Pusher Rod	4 Radiopaque Tip

6.0 Alternate Practices or Procedures

The traditional standard of care for treatment of abdominal aortic aneurysms is surgical implantation of a synthetic graft within the diseased aneurysmal vessel. Repair of AAA is indicated when the risk of rupture is judged to be greater than the risks of the procedure. However, AAA diagnosed patients may be assessed as poor surgical or anesthesia candidates, and may either be medically managed and continued to be monitored, or be recommended for endovascular repair.

7.0 Marketing History

The Powerlink System is commercially available in many countries throughout the world including European countries Germany, France, Italy, the Netherlands, Poland, the United Kingdom, Greece, Sweden, Spain, Belgium, Austria, Portugal and Switzerland (August 1999); South Africa (August 1999); Argentina (March 2001); Brazil (February 2003); China (November 2002); and Australia (April 1999). The Powerlink System has not been withdrawn from marketing for any reason relating to the safety and effectiveness of the device.

8.0 Adverse Events

8.1 Observed Adverse Events

A U.S. multicenter, prospective study conducted at 15 centers, which included 192 test patients and 66 control patients, provided the basis of the observed adverse events rates presented in Tables 4 and 5.

Table 4 Serious Adverse Events between Powerlink and Control Groups (0-30 days)

Serious Adverse Event/Complication	Powerlink[1] n/N (%)	Control[1] n/N (%)	P-value
Patients Experiencing at least One Serious AE	36/192 (18.75)	23/66 (34.85)	**0.0104**
Access Failure	1/192 (0.52)	--	--
Anemia	1/192 (0.52)	2/66 (3.03)	0.1618
Bleeding	4/192 (2.08)	3/66 (4.55)	0.3767
Cardiac Disorders	12/192 (6.25)	10/66 (15.15)	**0.0384**
Coagulation	1/192 (0.52)	0/66 (0.00)	>0.9999
Conversion	3/192 (1.56)	--	--
Death	2/192 (1.04)	4/66 (6.06)	**0.0389**
Delivery Failure	1/192 (0.52)	0/66 (0.00)	> 0.9999
Device Kink	1/192 (0.52)	--	--
Endoleak	5/192 (2.60)	--	--
Genital Disorder	0/192 (0.00)	1/66 (1.52)	0.2558
Gastrointestinal or Bowel Disorders	2/192 (1.04)	5/66 (7.58)	**0.0131**
Graft Occlusion	1/192 (0.52)	--	--
Graft Thrombosis	0/192 (0.00)	2/66 (3.03)	0.0647
Hepatobiliary Disorders	0/192 (0.00)	1/66 (1.52)	0.2558
Infections and Infestations	1/192 (0.52)	2/66 (3.03)	0.1618
Multi-Organ Failure	0/192 (0.00)	1/66 (1.52)	0.2558
Neoplasms	1/192 (0.52)	1/66 (1.52)	0.4469
Neurological Disorders	2/192 (1.04)	0/66 (0.00)	>0.9999
Other[2]	5/192 (2.60)	3/66 (4.55)	0.4255
Pain	2/192 (1.04)	0/66 (0.00)	>0.9999
Pulmonary	4/192 (2.08)	11/66 (16.67)	**0.0001**
Renal and Urinary Disorders	2/192 (1.04)	5/66 (7.58)	**0.0131**
Reproductive System and Breast Disorders	0/192 (0.00)	1/66 (1.52)	0.2558
Sepsis	0/192 (0.00)	1/66 (1.52)	0.2558
Supplemental Procedure	4/192 (2.08)	0/66 (0.00)	0.5750
Thrombocytopenia	0/192 (0.00)	1/66 (1.52)	0.2558
Vascular Disorders	15/192 (7.81)	7/66 (10.61)	0.4548
Wound	1/192 (0.52)	1/66 (1.52)	0.4469

[1] Adding the sub groups will not necessary result in the group total because some patients may experience more than one adverse event.

[2] Test: (1) Right leg weakness, (1) Pulseless right lower extremity, (1) Delirum, (1) Right leg pain/necrotic feet and toes, (1) minimal hempotysis. Control: (1) Creatinine increase, (1) Hypovolemia, (1) Colstridium difficile enterocolitis

Table 5. Serious Adverse Events between Powerlink and Control Groups (31 days – 12 months)

Serious Adverse Event/Complication	Powerlink[1] n/N (%)	Control[1] n/N (%)	P-value
Patients Experiencing at least One Serious AE	45/190 (23.68)	12/62 (19.35)	0.6003
Bleeding	3/190 (1.58)	0/62 (0.00)	>0.9999
Cardiac Disorders	13/190 (6.84)	1/62 (1.61)	0.1987
Conversion	1/190 (0.53)	--	--
Death	11/190 (5.79)	5/62 (8.06)	0.5515
Endoleak	3/190 (1.58)	--	--
Gastrointestinal or Bowel Disorders	3/190 (1.58)	2/62 (3.23)	0.5992
Graft Occlusion	2/190 (1.05)	--	--
Infections and Infestations	7/190 (3.68)	2/62 (3.23)	>0.9999
Neoplasms	11/190 (5.79)	1/62 (1.61)	0.3035
Neurological Disorders	6/190 (3.16)	0/62 (0.00)	0.3409
Other[2]	4/190 (2.11)	2/62 (3.23)	0. 0.6378
Pain	1/190 (0.53)	0/62 (0.00)	>0.9999
Pulmonary	5/190 (2.63)	2/62 (3.23)	0.6822
Renal and Urinary Disorders	2/190 (1.05)	0/62 (0.00)	>0.9999
Sepsis	2/190 (1.05)	0/62 (0.00)	>0.9999
Supplemental Procedure	2/190 (1.05)	0/62 (0.00)	>0.9999
Urinary	1/190 (0.53)	0/62 (0.00)	>0.9999
Vascular Disorders	5/190 (2.63)	1/62 (1.61)	>0.9999
Wound	0/190 (00.00)	2/62 (3.23)	0.0598

[1]Adding the sub groups will not necessary result in the group total because some patients may experience more than one adverse event.

[2]Test: (1) Left eye blindness, (1) Multiple fractures/pulmonary contusion, (1) Parathyroidism, (1) Hip replacement. Control: (1) Necrotic fascia, (1) Incisional hernia.

8.2 Potential Adverse Events

Adverse events that may occur and/or require intervention include, but are not limited to:

- Amputation
- Anesthetic complications and subsequent attendant problems (e.g., aspiration)
- Aneurysm enlargement
- Aneurysm rupture and death
- Aortic damage, including perforation, dissection, bleeding, rupture and death
- Arterial or venous thrombosis and/or pseudoaneurysm
- Arteriovenous fistula
- Bleeding, hematoma or coagulopathy
- Bowel complications (e.g., ileus, transient ischemia, infarction, necrosis)
- Cardiac complications and subsequent attendant problems (e.g., arrhythmia, myocardial infarction, congestive heart failure, hypotension, hypertension)
- Claudication (e.g., buttock, lower limb)
- Death
- Edema
- Embolization (micro and macro) with transient or permanent ischemia or infarction
- Endoleak
- Stent graft: improper component placement; incomplete component deployment; component migration; suture break; occlusion; infection; stent fracture; graft material wear; dilatation; erosion; puncture and perigraft flow
- Fever and localized inflammation
- Genitourinary complications and subsequent attendant problems (e.g., ischemia, erosion, fistula, incontinence, hematuria, infection)
- Hepatic failure
- Impotence
- Infection of the aneurysm, device access site, including abscess formation, transient fever and pain.
- Lymphatic complications and subsequent attendant problems (e.g., lymph fistula)
- Neurologic local or systemic complications and subsequent attendant problems (e.g., stroke, transient ischemic attack, paraplegia, paraparesis, paralysis)
- Occlusion of device or native vessel.
- Pulmonary/respiratory complications and subsequent attendant problems (e.g., pneumonia, respiratory failure, prolonged intubation)
- Renal complications and subsequent attendant problems (e.g., artery occlusion. Contrast toxicity, insufficiency, failure)
- Surgical conversion to open repair

- Vascular access site complications, including infection, pain, hematoma, pseudoaneurysm, arteriovenous fistula
- Vessel damage
- Wound complications and subsequent attendant problems (e.g., dehiscence, infection)
- Vascular spasm or vascular trauma (e.g., iliofemoral vessel dissection, bleeding, rupture, death)

9.0 Summary of Preclinical Studies

9.1 Biocompatibility

Toxicology and biocompatibility testing was conducted for materials used in the Powerlink System. Testing was conducted in accordance with ISO 10993-1 Biological Evaluation of Medical Devices standard dated June 1998. The Bifurcated Infrarenal Stent Grafts, Proximal Cuffs and Limb Extensions are classified as implant devices with long term blood contact in accordance with ISO 10993-1. The Bifurcated and Straight Delivery Catheters were classified as externally communicating devices with circulating blood contact and limited exposure of less than 24 hours.

Tables 6 and 7 summarize the biocompatibility results for the stent graft implants. Table 8 summarizes the biocompatibility results for the bifurcated and straight delivery catheters. All test results indicate that the materials and processes used to manufacture the Powerlink System are biocompatible and suitable for their intended uses.

Table 6 Summary of Biocompatibility Results for the Bifurcated, Proximal Cuff, and Limb Extensions

Test Name	Results
Cytotoxicity – ISO Elution Method	Non-Cytotoxic
Hemolysis – Extraction Method	Non-Hemolytic
Rabbit Pyrogen – Material Mediated	Non-Pyrogenic
Acute Systemic Toxicity in the Mouse	No mortality or evidence of systemic toxicity
Acute Intracutaneous Reactivity Study in the Rabbit	No evidence of significant irritation or toxicity from the extracts injected intracutaneously into rabbits.
ISO Muscle Implantation Study with Histopathology – (Two weeks)	Test article and negative control had comparative results.
ISO Muscle Implantation Study with Histopathology – (Twelve weeks)	Test article and negative control had comparative results.
ISO Sensitization Study in the Guinea Pig (Maximization Method)	No evidence of causing delayed dermal contact sensitization in the guinea pig.
Genotoxicity: Salmonella Typhimurium Reverse Mutation Study	Non-Mutagenic
Genotoxicity: Chromosomal Aberration Study in Mammalian Cells	Non-Genotoxic
C3a Complement Activation Assay	The test article indicated activation at 17,481 ng/ml (13% of the positive control material).
Plasma Recalcification Time Coagulation Test	Acceptable ranges
Subchronic Intravenous Toxicity Study in the Rat (14 Day)	No significant evidence of systemic toxicity
Mouse Bone Marrow Micronucleus Test	No evidence of cellular toxicity.

22

Table 7 Summary of Biocompatibility Results for the Alternate Graft Material

Title	Results
Cytotoxicity – ISO Elution Method	Non-Cytotoxic
Dermal Sensitization	Under the conditions of this study, the test sample is a weak sensitizer (0.9% sodium chloride extraction). Under the conditions of this study, the test sample is a weak sensitizer (cottonseed oil extraction).
Systemic Toxicity Test	No signs or symptoms of systemic toxicity were observed.
Subchronic Toxicity Test	No signs of biological reactivity observed. Gross necropsy observations: all organs and or tissues appeared normal.
AMES Salmonella Mutagenicity Assay	DMSO Extract – the test sample was extracted in dimethyl sulfoxide (DMSO). Sodium azide, daunomycin, ICR-191 and 2-amino-fluorene were used as positive controls. The test sample was shown to be non-mutagenic under test conditions.
30-Day Implantation Test	In animal #4135, there was no biologically significant difference noted between test and control implantation sites. In animal #4215, all test and control implantation sites exhibited significant inflammation, but was most marked in the control site. The reason for the inflammation could not be determined.
Hemolysis – Extraction Method	Non-Hemolytic
Chronic Toxicity Test	No treatment-related changes were observed in any of the tissues examined from the animals. Intraperitoneal inflammations associated with cottonseed oil was observed in both control and test animals. No differences in the nature or degree of inflammation were noted between the two groups.
Unscheduled DNA Synthesis Assay in Rat Primary Hepatocytes	The saline and dimethylsulfoxide test article extracts were considered to be negative in this study.
Chromosome Aberrations in Chinese Hamster Ovary (CHO) Cells Conducted	The saline and DMSO extracts were concluded to be negative for the induction of structural chromosome aberrations in Chinese hamster ovary (CHO) cells.
In-vivo Evaluation – A Six Sheep, Eight Week Implant Study	The graft material appears to be efficacious, biocompatible and hemocompatible when implanted for 56 days in the ovine, carotid artery to jugular vein shunt.

Table 8 Summary of Biocompatibility Results for the Delivery Catheters

Title	Results
Cytotoxicity – ISO Elution Method	Non-Cytotoxic
Hemolysis – Extraction Method	Non-Hemolytic
Rabbit Pyrogen – Material Mediated	Non-Pyrogenic
Acute Systemic Toxicity in the Mouse	No mortality or evidence of systemic toxicity
Acute Intracutaneous Reactivity Study in the Rabbit	No evidence of significant irritation or toxicity from the extracts injected intracutaneously into rabbits.
ISO Sensitization Study in the Guinea Pig (Maximization Method)	No evidence of causing delayed dermal contact sensitization in the guinea pig.
Sensitization in the Guinea Pig (Maximization Method) DNCB Control	The known sensitizer DNCB showed significant evidence of causing delayed dermal contact sensitization in the guinea pig.
Plasma Recalcification Time Coagulation Test	Results within acceptable ranges.
C3a Complement Activation Assay	The blue/gray distal end of test article indicated activation at 11,193 ng/ml (0% of the positive control material); the dark blue sheath indicated activation at 10,134 ng/ml (0% of the positive control); the guidewire distal tip indicated activation at 23,617 ng/ml (58% of the positive control).

9.2 Product Testing

Endologix Inc. has conducted comprehensive non-clinical bench studies and analytical testing of the Powerlink System stent-grafts and delivery systems. Testing was conducted considering methodology from national and international industry standards and guidances (see Table 9). All test samples were subjected to the same manufacturing processes as intended for clinical usage. A summary of the guidances used and the non-clinical bench testing is presented in the tables below. The results of all the testing demonstrate that the Powerlink System meets established functional requirements and supports the safety and effectiveness of the Powerlink System when used in accordance with its Instructions for Use.

Table 9 Standards and Guidances used in the Powerlink System Testing

ANSI/AMMI/VP20, Cardiovascular Implants – Vascular Prostheses, superceded by ANSI/AMMI/ISO 7198:1998/2001, Cardiovascular Implants – Tubular Vascular Prostheses
ASTM STP 898, Vascular Graft Update, Safety and Performance
ISO 10993-1 - Biological evaluation of medical devices – Part 1: Evaluation and testing
ISO 14630 - Non-active surgical implants – General requirements, 1997
BS EN 12006-3 - Non active surgical implants – Particular requirements for cardiac and vascular implants – Part 3: Endovascular Devices, 1999.
ISO 10555-1 - Sterile, single-use Intravascular catheters – Part 1: General requirements. 1995.
Guidance for the submission of research and marketing applications for interventional cardiology devices; Interventional Cardiology Devices Branch, Division of Cardiovascular, Respiratory and Neurology Devices, ODE, Food and Drug Administration; May 1994
Guidance for Testing MR Interaction with Aneurysm Clips, CDRF MR Working Group, May 22, 1996
A Primer on Medical Device Interactions with Magnetic Resonance Imaging Systems, CDRH Magnetic Resonance Working Group, February 7, 1997
TPEG Guidelines for Development and Use of Transluminally Placed Endovascular Prosthetic (Stented) Grafts in the Arterial system, dated March 16, 1994.
MIL-STD-1312-1, Standard Practice Fastener Test Methods, Method 1, Salt Spray, August 1997
ASTM B117-97, Standard Practice for Operating Salt Spray (Fog) Apparatus
ASTM F2129-01, Standard Test Method for Conducting Cyclic Potentiodynamic Polarization Measurements to Determine the Corrosion Susceptibility of Small Implant Devices
ISO 25539-1, Cardiovascular Implants – Endovascular Devices – Part 1: Endovascular Prosthesis, 2003

9.2.1 Delivery System Test Results Summary

The following Table 10 summarizes testing performed to assess the delivery system's ability to access the implant location, accurately deploy the implant while maintaining device integrity, safely withdraw, and maintain hemostasis. The results of these *in vitro* testing demonstrate that the Powerlink System Stent Graft has met the physical and mechanical design performance requirements.

25

Table 10 Summary of Powerlink Delivery System Results

TEST	SPECIFICATION / ACCEPTANCE CRITERIA	RESULTS	SAMPLE SIZE
Bond Strength Test	All non-critical bonds shall have minimum bond strengths of 3.375 lbf. All critical bonds shall have minimum bond strengths ranging from 5.0 lbf. to 12.0 lbf.	All test results met the acceptance criteria for all bonds.	60
Radiopaque Tip Evaluation	The radiopaque tip must be visible under fluoroscopy. The bond strength of the radiopaque tip must be comparable to the bond strength of the non radiopaque tip.	All results were successful and met the acceptance criteria.	10
Powerlink Delivery System Functional Test	The following criteria are evaluated as they apply to the Powerlink System model under evaluation. Guidewire insertion: Delivery system will accept 0.035" guidewire while in a bent configuration. Successful deployment: Delivery system successfully deploys stent graft. Smooth Deployment: Deployment is smooth with no awkward or forceful action required. Positional deployment: Delivery system deployed stent graft within ± 5mm error of a given point. Proper seating: The stent graft expands to a tubular shape and seated itself to the walls of the tubular fixture. Single lumen path: The stent graft when expanded must form a single-shaped lumen path. Stent Graft migration: Stent graft must not migrate more than ± 3mm from its original position. Stent Graft damage: Stent graft was not damaged upon deployment Catheter flexibility: Catheter conforms to a kink radius of 3" without affecting maneuverability or functionality. Deployment resistance between 1- 4 on a scale of 1-5. Leak pressure: When tightened onto guidewire, the gasket does not leak at pressures less than 3.0 psi.	All results were successful and met the acceptance criteria.	95
Deployment Force Test	The deployment force must be ≤ 10 lbf for the bifurcated body, 5 lbf for the limbs, and ≤ 10 lbf for proximal cuffs and limb extensions.	All samples met or exceeded the acceptance criteria.	75
Tubing Tensile Strength	All tubular catheter components must have a minimum tensile strength based on tubular catheter diameter. The larger the diameter (max. 1.85 mm), the higher the tensile force (max. 15N)	All results were successful and met the acceptance criteria.	10

9.2.2 Implant Test Results Summary

The following Table 11 summarizes testing performed to assess the implant's deployment accuracy, fixation effectiveness, durability, ability to exclude the aneurysm, sizing, patency, and MRI compatibility.

Table 11 Summary of Powerlink Stent Graft Results

TEST	SPECIFICATION / ACCEPTANCE CRITERIA	RESULTS	SAMPLE SIZE
Suture Connection Tensile Test	The sutures at the connections must be as strong as the graft material to ensure that the suture connection is not the weak point in the graft to stent cage connection. The graft shall fail before the suture fails.	All results were successful and met the acceptance criteria.	75
Expansion Test	No visible cracks under 100x and 500x magnification.	There were no cracks detected. All results were successful and met the acceptance criteria.	75
Radial Strength Test	Device profile must not be greater than the profile + 5%, as established in the Design Specification. All stents shall have an expansion pressure of ≥ 0.5 kPa at 2mm less than their nominal diameter, which prevents the stent graft from migration.	All samples met or exceeded the acceptance criteria.	75
Stent Graft Geometry Test	The stent graft body and limb outer diameter(s) and lengths(s) must meet the requirements established in the Design Specification.	All results were successful and met the acceptance criteria.	75
Stent Graft Kink Radius	When the minimum radius at the center of the stent graft body and limbs is reduced to approximately 50% of the original diameter, the minimum bending radius of the stent graft must be capable of being bent to a radius of 3 inches (7.6 cm) without kinking.	All results were successful and met the acceptance criteria in that all of the stent grafts were capable of being bent to a radius of 3 inches without kinking.	20
Suture Fluid Flow Rate	The fluid flow rate of the ePTFE graft sutures must be comparable (not greater than 10%) to the amount of flow for a commercially available woven polyester graft.	All results were successful and met the acceptance criteria. When compared to the same volumes and pressures, the leak rate of the ePTFE sutured graft was significantly less than the leak rate seen on commercially available woven polyester grafts.	25
Stent Graft Migration and Holding Force	When deployed within a bifurcated stent graft, the force required to pull a proximal cuff from a bifurcated stent must be greater than 0.3N. When deployed within a bifurcated stent graft, the force required to pull a limb extension from a bifurcated stent must be greater than 0.1N.	All results were successful and met the acceptance criteria.	20

TEST	SPECIFICATION / ACCEPTANCE CRITERIA	RESULTS	SAMPLE SIZE
	Proximal cuff and limb extension stent graft migration: The graft must not migrate more than 3 mm from the initial zero position under 250 ± 25 mmHg pumping pressure.		
Migration Resistance	Stent grafts must migrate < 2.0 mm at the proximal and distal fixation points after exposure to a peak flow rate of 10.0 l/min. for 5 minutes.	All samples met or exceeded the acceptance criteria.	3
Salt Spray Testing of Powerlink Stent	No corrosion after minimum 48 hours salt spray test.	Finished, completed stents were exposed to salt water for a minimum of 48 hours and inspected under SEM for signs of corrosion. The test results met the acceptance criteria and exhibited no corrosion after the minimum 48 hour salt spray test.	4
Corrosion Testing per ASTM F2129	Equivalent corrosion resistance to a control device consisting of an FDA approved stent comprised of the same cobalt chromium material.	The Powerlink stent graft exhibited equivalent corrosion resistance as the control device. None of the Powerlink or control devices exhibited a passivity breakdown at voltages less than 1.0V.	5
MRI Test on the Endologix stent graft	Stent grafts will exhibit no movement or deflection more than 2 mm which is the same as the resolution of the fluoroscopy under which the device is deployed *in vivo*. The artifact created will not be larger than the actual stent area so that the stent will not cause imaging problems away from the immediate stent area. The largest temperature change for any samples shall not exceed 3°C which is the acceptable temperature increase for a short period time for a human body.	The test results met the acceptance criteria for use with MRI systems with a static magnetic field strength of 1.5 Tesla or less without causing any safety concerns.	15
ePTFE Characterization Testing	To assess the mechanical properties of the graft material (two material sources) for the following properties: Wall thickness: .0040" ± 0.0005" Inside diameter: 12-28 ± 5mm (varies by part number) Fibril length: 10-40 micron Radial tensile strength: 9N/mm (reference only) Longitudinal tensile strength: minimum 44N Suture retention, individual suture pull: minimum 138 grams Suture retention, average of 4 suture pulls: minimum 200 grams	All samples tested met the acceptance criteria.	133

TEST	SPECIFICATION / ACCEPTANCE CRITERIA	RESULTS	SAMPLE SIZE
	Water entry pressure: minimum 3 psi Burst pressure: minimum 18 psi Static pressure dilatation: maximum 5% change		
Wear Testing of Powerlink Stent Graft	Cyclical bench testing was performed on stent cage components to evaluate wire-to-wire and wire-to-graft wear over 10 million cycles at worst case in situ conditions. Wear extrapolated to 380 million cycles, representing 10 years in situ, was not to result in device failure. Different degrees of wear were artificially introduced in the wire cage at locations where significant wear was observed in the fatigue tests. The weakened wire cage had to meet the stent graft performance specifications with respect to the minimum expansion pressure and stent graft diameter.	Studies conducted under a simulated worse case in situ environment predict a wear of 12% of the stent wire thickness and a wear of 40% in the graft material thickness over 10 years. The results of the artificial wear tests demonstrate that the stent graft meets the product specifications for the minimum expansion pressure and the stent graft diameter even at 75% wear in the wire.	71
Fatigue Testing of Powerlink Stent Graft	Powerlink stent grafts were exposed to 10 years of simulated physiological loading conditions. Test conditions included a simulated compliance of 2.5% of the inner diameter of the test vessel and a cycle rate of 25±5Hz. No fractures or component failures were to be observed after simulated 5 years (190 million cycles) and 10 years (380 million cycles) in the fatigue tester.	Two specimens were inspected at 190 million cycles. Additional six specimens were inspected after 380 million cycles. No fractures were observed in the eight wire cages. No evidence of pitting or crevice corrosion was observed. No perforations were observed in the ePTFE graft. No fractured or loose sutures were observed.	32

TEST	SPECIFICATION / ACCEPTANCE CRITERIA	RESULTS	SAMPLE SIZE
Life Analysis of Powerlink Stent Graft	Finite element modeling (FEA) was performed to calculate the stresses introduced into the wire during the manufacturing process, device deployment, and in situ performance. The FEA had to demonstrate sufficient safety against fatigue failure of the wire over 10 years of implant.	Results of the FEA show that the most severe stresses are introduced into the loops of the wire cage. Infinite fatigue life of the stent is expected with a worst-case safety factor of 2.1.	N/A

9.3 Shelf-Life Studies

The Powerlink System is packaged on a HDPE card, inserted into double Tyvek® pouches, sealed and placed into a protective carton. Sterilization is accomplished with a validated sterilization process using 100% Ethylene Oxide.

A shelf-life study was conducted to evaluate the effects of aging and shipping on the Powerlink System. Product functionality, sterility and packaging integrity were evaluated after subjecting the device and packaging to conditions most likely to occur during typical shipping conditions and after three-years of aging. The results of all testing supported a 3 year shelf-life claim for all sizes and components of the Powerlink System (bifurcated, proximal cuffs, limb extensions).

9.4 Animal Studies

Two types of preclinical *in vivo* studies were conducted to evaluate the acute and chronic performance of the Endologix Powerlink Stent Graft. The bovine model was used in the acute study to assess the ease and accuracy of the delivery and deployment of the device to the target site, or any adverse response associated with the deployment of the device. The canine model was used in the chronic study to also assess delivery and deployment of the device or any adverse responses. In addition, the chronic study provided a histological and histomorphometric tissue healing sequence SEM wear analysis to demonstrate the safety of the design, as well as to provide verification of the oversizing recommendation for clinical use.

Table 12. Summary of Animal Studies

ANIMAL STUDY	#/TYPE OF ANIMAL	TEST ARTICLE	METHODS	RESULTS/CONCLUSIONS
Acute Deployment Evaluation of the Powerlink System in Bovines	4 Bovines	Clinical-sized, bifurcated device and delivery catheter.	Four bovines were assessed for acute catheter delivery and deployment and acute device implantation.	Devices were successfully delivered and deployed in all animals. The devices met all functional performance acceptance criteria for patency, migration, or any other adverse observation.
Chronic Evaluation of the Endologix Powerlink System in Canine Vasculature	6 Canines	Down-sized, straight device and delivery catheter.	Six canines were assessed for catheter delivery and deployment and device functionality subchronically and chronically. Three canines were maintained for 1 month and three canines were maintained for 6 months.	Devices were successfully delivered and deployed in all animals. The devices met all functional performance acceptance criteria for patency, migration, or any other adverse observation. Device patency at 1 and 6 months was demonstrated by IVUS or angiography. Histopathologic evidence of all animals demonstrated normal graft healing response.

10.0 Summary of Clinical Studies

10.1 Study Objectives

The objective of the clinical study was to demonstrate the safety and effectiveness of the Powerlink System Stent Graft as an alternative to open surgical repair in the primary treatment of infrarenal abdominal aortic, or aorto-iliac aneurysms through assessment of device safety as measured by the incidence of adverse events and factors related to morbidity, and device effectiveness as measured by survival at 12 months. Additionally, measures related to the procedure and clinical utility were assessed.

10.2 Study Design

The clinical study was a prospective, multicenter, non-randomized, concurrently controlled study designed to compare standard risk endovascular patients having anatomy suitable for the Powerlink System Stent Graft, to a control group comprised of standard risk surgical patients. Fifteen sites enrolled 192 standard risk and 66 surgical control patients. Clinical and follow-up evaluations were scheduled for pre-discharge, 1 month, 6 months, 12 months and annually thereafter. Patient follow-up and accountability at 1 month, 6 months and 12 months are presented in Table 13, as these were the primary data analysis time points. Imaging data provided in this summary is based on findings from an independent centralized image analysis laboratory (Core Lab), which reviewed CT scans and abdominal X-rays to assess aneurysm changes, device position and integrity, and endoleaks.

Table 13. Patient Follow-up and Accountability[1]

Item	Powerlink N=192			Surgical Control N=66		
Interval	**1 m**	**6 m**	**12 m**	**1 m**	**6 m**	**12 m**
No Device[2]	1	1	0	0	0	0
Conversion to open Repair[3]	3	3	3	n/a	n/a	n/a
Expired	2	8	8	3	5	8
Withdrawn/lost to follow-up	0	4	11	0	0	6
Available	190	180	173	63	61	52
Site CT imaging	186	171	157	n/a	n/a	n/a
Core Lab CT imaging	121	117	144	n/a	n/a	n/a
Site KUB imaging	129	118	146	n/a	n/a	n/a
Core Lab KUB imaging	129	118	146	n/a	n/a	n/a
Site evaluated for endoleak	186	171	157	n/a	n/a	n/a
Core Lab evaluated for endoleak	110	101	128	n/a	n/a	n/a
Site evaluated for aneurysm enlargement	n/a	80	100	n/a	n/a	n/a
Core Lab evaluated for aneurysm enlargement	n/a	78	96	n/a	n/a	n/a

[1]Data analysis sample size varies for each of the timepoints above and in the following tables. This variability is due to patient availability for follow-up, as well as, quantity and quality of images available from specific timepoints for evaluation. For example, the number and quality of images available for evaluation of endoleak at 12 months is different than the number and quality of images available at 24 months due to variation of the number of image exams performed, the number of images provided from the clinical site to the Core Lab and/or the number of images with acceptable evaluation quality. Totals at time points are not cumulative, unless otherwise noted.

[2]Access failure, commercially available device implanted.

[3]The conversion patients continued to return for follow-up.

10.3 Patient Demographics

Tables 14 and 15 compare the subject characteristics and initial aneurysm diameter of the Powerlink Stent Graft and open surgical patients, respectively.

Table 14 Comparison of Subjects Characteristics

Item	Powerlink	Surgical Control	P-value
Age[1]	73.2 ± 7.0	69.7 ± 7.9	**0.0008**[1]
Gender (Male)	88.5% (170/192)	86.4% (57/66)	0.6627
Current Medical Conditions			
Peripheral Vascular Disease	16.7% 32/192	15.2% 10/66	0.8488
Hypertension	63.9% 122/191[2]	69.7% 46/66	0.4541
Renal Failure	2.6% 5/192	1.5% 1/66	>0.9999
COPD	31.8% 61/192	24.2% 16/66	0.2779
Coronary Artery Disease	45.8% 88/192	59.1% 39/66	0.0657
Liver Disease	4.2% 8/192	1.5% 1/66	0.4549
Diabetes	13.1% 25/191[2]	18.2% 12/66	0.3142
Coagulopathy	1.0% 2/192	0.0% 0/66	>0.9999
Previous Medical Conditions			
MI (≤ 6 mos ago)	2.1% 4/192	4.6% 3/66	0.3767
MI (> 6 mos ago)	24.5% 47/192	28.8% 19/66	0.5149
Angina	13.0% 25/192	12.1% 8/66	>0.9999
Congestive Heart Failure	6.8% 13/192	3.0% 2/66	0.3675
Valvular Disease	3.7% 7/192	7.6% 5/66	0.1911
Arrhythmia	16.2% 31/192	7.6% 5/66	0.1002
Prior CABG	28.1% 54/192	30.3% 20/66	0.7538
Prior PTCA/Stent	13.0% 25/192	18.2% 12/66	0.3127
Valve Replacement	2.6% 5/192	1.5% 1/66	>0.9999
Renal Failure	2.6% 5/192	1.5% 1/66	>0.9999
Cerebrovascular Disease	19.8% 38/192	15.2% 10/66	0.4668
Previous Abdominal Surgery	47.4% 91/192	37.9% 25/66	0.1987
History of Aneurysmal Disease	13.8% 26/189[2]	18.2% 12/66	0.4230
Alcohol Abuse	2.6% 5/192	9.1% 6/66	**0.0349**
Smoking History			
Never Smoked	17.2% 33/192	14.3% 9/63[2]	**0.0359**[3]
Past Smoker	64.1% 123/192	50.8% 32/63[2]	
Current Smoker	18.8% 36/192	34.9% 22/63[2]	

[1]The Powerlink patients were older than the control patients on an average of 3.5 years.
[2]One patient in the Powerlink group did not have a record of this condition. Three Powerlink patients did not report on a history of aneurysmal disease. Three surgical control patients did not report smoking status.
[3]The statistical method for "smoking history" tests the uniformity or lack of uniformity of the distribution of "smoking history" across the treatment groups. Since the patient cannot be in more than one smoking class, the three classes generate a multinomial variable and the proper statistical test is a chi-square that provides a single p-value.

Table 15 Aneurysm Diameter Distribution

Diameter Range	Powerlink	Surgical Control
< 30 mm	0.5% 1/188[1]	0.0% 0/58[1]
30-39 mm	0.0% 0/188[1]	1.7% 1/58[1]
40-49 mm	40.4% 76/188[1]	17.2% 10/58[1]
50-59 mm	48.9% 92/188[1]	39.7% 23/58[1]
60-69 mm	9.6% 18/188[1]	25.9% 15/58[1]
70-79 mm	0.5% 1/188[1]	12.1% 7/58[1]
80-89 mm	0.0% 0/188[1]	0.0% 0/58[1]
> 89 mm	0.0% 0/188[1]	3.5% 2/58[1]

[1]Four Powerlink and eight surgical control patients did not have an aneurysm diameter reported preoperatively.

10.4 Study Results

10.4.1 Devices Implanted

Table 16 lists the devices implanted in the U.S. pivotal study.

Table 16. Devices Implanted

Item	Powerlink
Bifurcated	97.9% 188/192
Proximal Cuff	46.3% 87/188
Limb Extension	15.4% 29/188

The Powerlink System Bifurcated Infrarenal Stent Graft has a main body that is available in only two lengths (80 mm and 100 mm). Proximal cuffs were used to treat intraoperative proximal Type I endoleaks or to accommodate the distance from the lowest renal artery to the aortic bifurcation. This accommodation for the distance is unique to the Powerlink Stent Graft due to its long main body design.

10.4.2 Primary Results

Measures of mortality, rupture, conversion and serious adverse events are presented in Table 17 and Figures 6 and 7. Where available, 24 -month data are provided. Figures 6 and 7 depict all-cause and AAA-related survival, respectively. All early deaths (0-30 days) were considered AAA-related. Deaths after 30 days were considered AAA-related if AAA disease, related to a subsequent procedure, or device involvement was confirmed. Powerlink System Stent Graft patients exhibited no significant differences versus the control for freedom from serious adverse events in Figure 8.

Table 17. Primary Results

Item	Powerlink		Surgical Control		P-Value
All Death (0-30 days)[1]	1.0%	2/192	6.06%	4/66	**0.0389**
All Death					
(31 days - 12 Months)[2]	5.7%	11/192	7.6%	5/66	0.5460
AAA-related	1.0%	2/192	0.0%	0/66	>0.9999
Non AAA-related	4.7%	9/192	7.6%	5/66	0.3584
All Death					
(0 days - 12 Months)[1, 2]	6.8%	13/192	13.6%	9/66	0.1218
AAA-related	2.1%	4/192	6.1%	4/66	0.2091
Non AAA-related	4.7%	9/192	7.6%	5/66	0.3584
Rupture	0.0%	0/192	n/a		n/a
Conversion					
(0-30 days)[3]	1.6%	3/192	n/a		
(31 days-12 months)[3]	0.5%	1/192	n/a		n/a
(0-12 months)[3]	2.1%	4/192	n/a		
Serious Adverse Events[4]					
(0-30 days)	18.8%	36/192	34.9%	23/66	**0.0104**
(31 days-12 months)	23.4%	45/192	18.2%	12/66	0.3946
(0-12 months)[5]	34.9%	67/192	45.5%	30/66	0.1419

[1]All deaths (0-30 days) were considered AAA and procedure related.
[2]Of the deaths (31 days-12 months), two were considered AAA and procedure related: (1) ischemic heart disease at 33 days, (1) perforated aorta during operative repair of endoleak at 13 months.
[3]Patients underwent conversion due to: (1) access failure, (1) delivery catheter limb sheath problem during deployment, (1) bleeding of left external artery caused by a wire or catheter, (1) perforated aorta during operative repair of endoleak at 13 months (same patient as late AAA related death).
[4]Serious adverse events are included in Tables 4 and 5.
[5]Adding the sub groups will not necessarily result in the group total because some patients may experience an adverse event in both sub groups.

Figure 6 presents all-cause survival to 12 months. The accompanying table presents the Kaplan-Meier analysis at 1, 6 and 12 months.

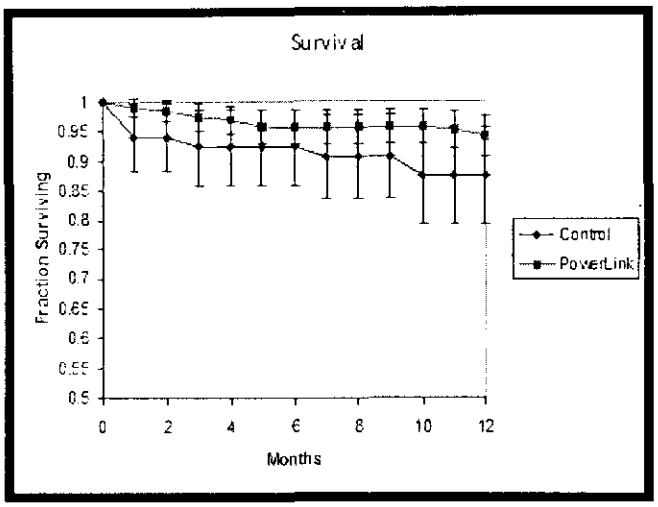

Figure 6. Survival at 12 Months (Error bars represent 95% confidence limits)

	1 month		6 month		12 month	
Item	**N**	**%survival***	**N**	**%survival**	**N**	**%survival**
Powerlink	190	99.0	179	95.8	150	94.2
Surgical Control	62	93.9	58	92.4	45	87.5

*Log-rank p = 0.0708

Figure 7 presents AAA-related survival to 12 months. The accompanying table presents the Kaplan-Meier analysis at 1, 6 and 12 months.

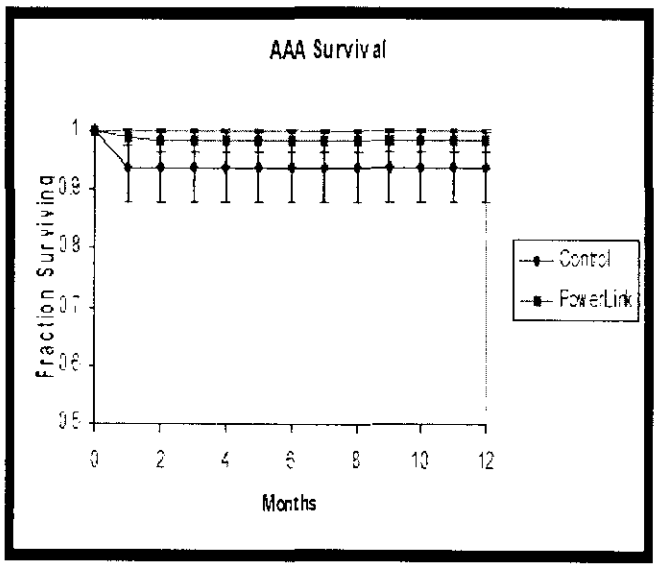

Figure 7 AAA-Related Survival at 12 Months (Error bars represent 95% confidence limits)

	1 month		6 month		12 month	
Item	**N**	**%survival***	**N**	**%survival**	**N**	**%survival**
Powerlink	190	99.0	180	98.4	150	98.4
Surgical Control	62	93.9	60	93.9	45	93.9

*Log-rank p = 0.1039

Figure 8 presents freedom from serious adverse events to 12 months. The accompanying table presents the Kaplan-Meier analysis at 1, 6 and 12 months.

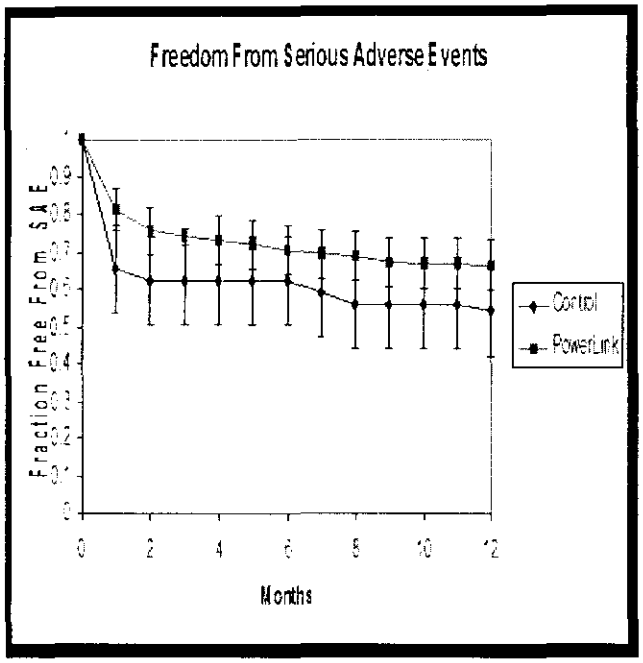

Figure 8. Freedom from Serious Adverse Events (Error bars represent 95% confidence limits)

	1 month		6 month		12 month	
Item	**N**	**% SAE Free***	**N**	**% SAE Free***	**N**	**% SAE Free***
Powerlink	156	81.3	133	70.3	103	66.0
Surgical Control	43	65.2	40	62.1	29	54.0

*Log-rank p = 0.0802.

Tables 18 through 20 describe results of the Powerlink System Stent Graft subjects as reported by the Core Lab. Device performance factors analyzed by the Core Lab include Abdominal Radiographic Findings (Table 18), Graft Patency (Table 19), and Graft Migration (Table 20).

Table 18 Abdominal Radiographic Findings

Item	Powerlink
Stent Fractures	
30 Days	0.0% (0/129)
6 Months	0.0% (0/118)
12 Months	0.0% (0/146)
24 Months	0.0% (0/81)

Table 19 CT Findings Graft Patency[1]

Item	Powerlink
Graft Patency	
30 Days	100.0% (115/115)
6 Months	100.0% (110/110)
12 Months	100.0% (140/140)
24 Months	100.0% (98/98)

[1]Core Lab definition is contrast-enhanced blood flow throughout the length of the graft.

Table 20 CT Findings Graft Migration

Item	Powerlink
Graft Migration (>5 mm) at 12 Months	
With clinical sequelae or intervention	0.0% (0/136)
Without clinical sequelae or intervention	4.4% (6/136)
Graft Migration (>10 mm) at 12 Months	0.7% (1/136)

Table 21 presents the incidence of endoleaks by evaluation interval, as identified by the Core Lab.

Table 21. Endoleaks (All Types, New and Persistent)

Item	Powerlink
Endoleaks	
30 Days	22.7% (25/121)
6 Months	12.9% (13/117)
12 Months	14.1% (18/144)
24 Months	4.9% (5/103)

Table 22 presents the incidence of the first occurrence of an endoleak according to evaluation interval, as identified by the Core Lab at or before the 30 day, 6 month and 12 month exams. The number of patients who are leak-free thereafter is also given.

Table 22 First Occurrence of Endoleaks[1]

Item	One-Month N=122			6-Month Exam N=139			12-Month Exam[3] N=141		
	%	Endo-leaks[1]	Leak-free there-after[2]	%	Endo-leaks[1]	Leak-free there-after[2]	%	Endo-leaks[1]	Leak-free there-after[2]
Endoleaks									
Proximal Type I	0.8	1	1	0.0	0	--	0.0	0	--
Distal Type I	0.0	0	--	0.0	0	--	0.0	0	--
Type II	17.2	21	8	15.1	21	4	12.1	17	4
Type III	0.0	0	--	0.0	0	--	0.0	0	--
Type IV	0.0	0	--	0.0	0	--	0.0	0	--
Multiple	2.5	3	1	0.7	1	0	0.7	1	0
Unknown	1.6	2	1	0.7	1	0	2.1	3	2

[1]Identifed by Core Lab
[2]Subsequent endoleaks may have been of different type than original.
[3]Follow-up after 24 months is not available.

Tables 23 through 25, present the change in aneurysm diameter for the endovascular patients, as identified by the Core Lab. Table 23 presents maximum aneurysm diameter change by interval. Tables 24 and 25 present aneurysm change and endoleak at 12 and 24 months, respectively.

Table 23. Change in Maximum Aneurysm Diameter by Interval[1]

Item	Powerlink	
31 days to 6 Months		
Decrease (≥5 mm)	17.1%	(14/82)
Unchanged	82.9%	(68/82)
Increase (≥5mm)	0.0%	(0/82)
31 days to 12 Months		
Decrease (≥5 mm)	35.7%	(35/98)
Unchanged	62.2%	(61/98)
Increase (≥5mm)	2.0%	(2/98)
31 days to 24 Months		
Decrease (≥5 mm)	63.9%	(46/72)
Unchanged	34.7%	(25/72)
Increase (≥5 mm)	1.4%	(1/72)

[1]Only includes patients with interpretable films and measurements of aneurysm change from 1 to 24 months.

Table 24 Change in Aneurysm Diameter and Endoleak at 12 Months[1]

Item	Endoleak		
	N	n	%
Aneurysm Change from 31 days to 12 Months			
Decrease (≥5 mm)	34	2	5.9
Unchanged	55	10	18.2
Increase (≥5mm)	2	0	0.0

[1]Only includes patients with interpretable films and measurements of aneurysm change and endoleak at 12 months.

Table 25. Change in Aneurysm Diameter and Endoleak at 24 Months[1]

Item	Endoleak		
	N	n	%
Aneurysm Change from 31 days to 24 Months			
Decrease (≥5 mm)	41	1	2.4
Unchanged	19	2	9.5
Increase (≥5mm)	1	1	100.0

[1]Only includes patients with interpretable films and measurements of aneurysm change and endoleak at 24 months.

Tables 26 through 28, present the change in aneurysm volume for the endovascular patients, as identified by the Core Lab. Table 26 presents maximum aneurysm volume change by interval. Tables 27 and 28 present aneurysm change and endoleak at 12 and 24 months, respectively.

Table 26. Change in Aneurysm Volume by Interval[1]

Item	**Powerlink**
31 days to 6 Months	
Decrease (≥5%)	37.8% (31/82)
Unchanged	50.0% (41/82)
Increase (≥5%)	12.2% (10/82)
31 days to 12 Months	
Decrease (≥5%)	57.9% (55/95)
Unchanged	29.5% (28/95)
Increase (≥5%)	12.6% (12/95)
31 days to 24 Months	
Decrease (≥5 %)	68.6% (48/70)
Unchanged	20.0% (14/70)
Increase (≥5%)	11.4% (8/70)

[1]Only includes patients with interpretable films and measurements of aneurysm volume from 1 to 24 months.

Table 27 Change in Aneurysm Volume and Endoleak at 12 Months[1]

Item	Endoleak		
	N	n	%
Aneurysm Change from 31 days to 12 Months			
Decrease (≥5%)	53	4	7.6
Unchanged	27	5	18.5
Increase (≥5%)	9	3	33.3

[1]Only includes patients with interpretable films and measurements of aneurysm volume and endoleak at 12 months.

Table 28 Change in Aneurysm Volume and Endoleak at 24 Months[1]

Item	Endoleak		
	N	n	%
Aneurysm Change from 31 days to 24 Months			
Decrease (≥5%)	42	1	2.4
Unchanged	12	1	8.3
Increase (≥5%)	6	2	33.3

[1]Only includes patients with interpretable films and measurements of aneurysm volume and endoleak at 24 months.

AAA-related secondary interventions within the first year were performed in 9.9% of the Powerlink System Stent Graft patients as shown in Table 29. 5.7% of the secondary interventions were to treat an endoleak.

Table 29 Secondary Interventions (to 12 Months)

Item	Powerlink N = 192	
Intervention	N	%
Subjects with at least 1 intervention	19	9.9%
Treat an endoleak:		
Embolization	6	3.1%
Ancillary component	5	2.6%
Treat a graft limb occlusion	5	1.3%
Other native vessel procedure	3	1.6%

Secondary Outcome Measures

As described in Table 30, treatment of AAA with the Powerlink System Stent Graft compared to the surgical control group demonstrated significant benefits in recovery and clinical utility measures. Secondary measures included anesthesia time, procedure time, blood loss, and anesthesia type. In addition, clinical utility was assessed through clinical measures obtained prior to hospital discharge, which included days in ICU and days in the hospital to discharge.

Table 30 Secondary Outcomes by Treatment Group

Item	Powerlink		Surgical Control		P-value
Anesthesia Time (min)	185.1 ± 82.2		293.8 ± 111.5		**<0.0001**
Procedure Time (min)	135.9 ± 65.9		222.3 ± 100.1		**<0.0001**
Blood Loss (ml)	341.0 ± 412.6		1582.9 ± 1608.9		**<0.0001**
Days in ICU	0.78 ± 1.5		4.1 ± 8.4		**<0.0001**
Days to Discharge	3.3 ± 3.4		9.5 ± 7.7		**<0.0001**
Anesthesia Type:	%	n/N	%	n/N	
Local	21.4	41/192	0.0	0/66	**<0.0001**[1]
Epidural/Regional	11.5	22/192	0.0	0/66	
General	67.2	129/192	100.0	66/66	

[1]The statistical method for "anesthesia type" tests the uniformity or lack of uniformity of the distribution of anesthesia types across the treatment groups. Since the patient cannot have more than one "anesthesia type", the three types generate a multinomial variable and the proper statistical test is a chi-square that provides a single p-value.

10.4.4 Evaluation of Gender Bias

Fewer females are affected by AAA than males[1]. Because of smaller access and different anatomical consideration, an analysis was done to determine if females had different rates of mortality or major adverse events. In the table below, the 12-month rates of Kaplan-Meier survival and freedom from major adverse event as defined in the protocol are presented. The results show that there are no statistically significant differences by gender and over all the rates and confidence limits appear to be similar. Overall mortality and endoleak status at 12 months are reported in the Table 31 below.

[1] Mitchell, M.G., Rutherford, R.G. & Krupski, W.D. Infrarenal Abdominal Aneurysm, in Rutherford, R.G., ed. Vascular Surgery, 4th edition, Chapter 75, pp 1032-1060. WB Saunders, Co. Philadelphia, PA 1995.

Table 31 Safety Endpoints According to Gender and Treatment Group

Treatment Group/12 Month Endpoint	Males		Females		P-value*
	Rate (%)	95% CL	Rate (%)	95% CL	
Control Patients	**N=51**		**N=7**		
Survival	91.8	84.1 - 99.5	85.7	59.8 – 100.0	0.48
Freedom from Major Adverse Event	72.2	59.9 – 84.6	85.7	59.8 – 100.0	0.51
Powerlink Patients	**N=163**		**N=21**		
Survival	94.3	90.8 – 97.9	95.2	86.1 – 100.0	0.49
Freedom from Major Adverse Event	79.5	73.2 – 85.7	81.0	64.1 – 97.7	0.48

*Log-rank test

The results in Table 32 show that the overall mortality for Powerlink subjects is very similar between males and females. The proportion of males with endoleak is numerically smaller than that for females, but the difference is not statistically significant.

Table 32 Additional Endpoints According to Gender and Treatment Group[1]

Treatment Group/12Month Endpoint	Males		Females		P-value[2]
Powerlink Patients	**n/N**	**%**	**n/N**	**%**	
Overall Mortality by 12-months	9/163	5.5	1/21	4.8	> 0.99
Endoleak at 12-months	13/109[2]	11.9	3/12[2]	25.0	0.20

[1]Fishers exact test (two-sided).
[2]The denominator of this computation is the number of films determined to have leak data by the core laboratory.

11.0 Conclusions Drawn from Studies

These studies have shown that the Powerlink System Stent Graft can be placed with a high level of technical success which is maintained over time, and is comparable to a surgical control. Most aneurysm sizes either decreased or remained stable (98%) at 12 months. The additional clinical benefits associated with the Powerlink System Stent Graft compared to open surgical repair include comparable risk of serious treatment related complications, reducing the number of days spent in the ICU and hospital, reducing procedural blood loss, reducing procedural and anesthesia time, and reducing the need for general anesthesia.

12.0 Panel Recommendation

In accordance with the provisions of section 515 (c)(2) of the act as amended by the Safe Medical Devices Act of 1990, this PMA was not referred to the Circulatory Systems Devices Panel, an FDA advisory committee, for review and recommendation because the information in this PMA substantially duplicates information previously reviewed by the panel.

13.0 FDA Decision

FDA issued an approval order on OCT 29 2004. The applicant's manufacturing facility was inspected on March 14th and May 5th, 2004 and was found to be in compliance with the Quality System Regulation (21 CFR 820).

14.0 Approval Specifications

Directions for Use: See the Labeling

Hazards to Health from Use of This Device: See Indications, Contraindications, Warnings, Precautions, and Adverse Events in the labeling.

Post-approval Requirements and Restrictions: See approval order.