INSTRUCTIONS FOR USE
TYMLOS™ (tim lows')
(abaloparatide)
injection, for subcutaneous use

Instructions for Use
Read and follow this Instructions for Use so that you inject TYMLOS pen the right way. Call your healthcare provider if you have any questions about the right way to inject the TYMLOS pen.

Important information about your TYMLOS pen

- Do not try to inject TYMLOS yourself until you or your caregiver receive training from a healthcare provider on the right way to use TYMLOS pen.
- Do not share your TYMLOS pen or pen needles with other people, even if the needle has been changed. You may give other people a serious infection, or get a serious infection from them.
- Each TYMLOS pen is a prefilled pen containing 30 doses of TYMLOS. Each dose will contain 80 mcg of TYMLOS. You do not have to measure your dose. The pen measures each dose of TYMLOS for you.
- Use a new pen needle for each injection. Keep the cap on the TYMLOS pen when not using the pen.
- Before using the pen always check the label to be sure it is your TYMLOS pen.
- Do not use your TYMLOS pen if it looks damaged. If you drop your TYMLOS pen or it becomes damaged, call your healthcare provider or pharmacist or call 1-855-672-3487.
- To clean your TYMLOS pen, wipe the outside of the pen with a clean, damp cloth, if needed.
- The TYMLOS pen is not recommended for use by the blind or visually impaired without the help of a person trained in the right way to use the pen.

Pen needles to use with your TYMLOS pen

- Pen needles are **not included** with your TYMLOS pen. You will need a prescription from your healthcare provider to get pen needles from your pharmacy.
- The correct needles to use with your TYMLOS pen are 8mm, 31-gauge needles. Compatible needles include Clickfine®, BD Ultra-Fine™, MedtFine®, Easy Comfort, Clever Choice™ Comfort EZ™, and SureComfort™. If you are not sure what type of needle to use, ask your healthcare provider or pharmacist.

Supplies you will need for each injection using your TYMLOS pen

- 1 TYMLOS pen
- 1 pen needle
- 1 alcohol swab
- 1 cotton ball or gauze pad
- 1 sharps disposal container for pen needles and TYMLOS pens. See "**How should I throw away (dispose) of the pen needles and TYMLOS pens**?" in the far right column.

How should I store the TYMLOS pen?

- **Before first use,** store TYMLOS pens in the refrigerator between 36°F to 46°F (2°C to 8°C).
- Do not store pens with the needle attached.
- Do not freeze the TYMLOS pen **or expose it to heat.**

During 30 days of use:

- **After first use,** store the TYMLOS pen for up to 30 days at room temperature between 68°F to 77°F (20°C to 25°C).
- Keep the pen cap on your TYMLOS pen when storing. Do not store the TYMLOS pen with needle attached.
- Use your TYMLOS pen for only 30 days.
- Write down the date of your first use of TYMLOS here: _____/_____/_____. Throw away your TYMLOS pen 30 days after first opening it even if it still contains unused medicine.

Keep the TYMLOS pen, pen needles and all medicines out of the reach of children.

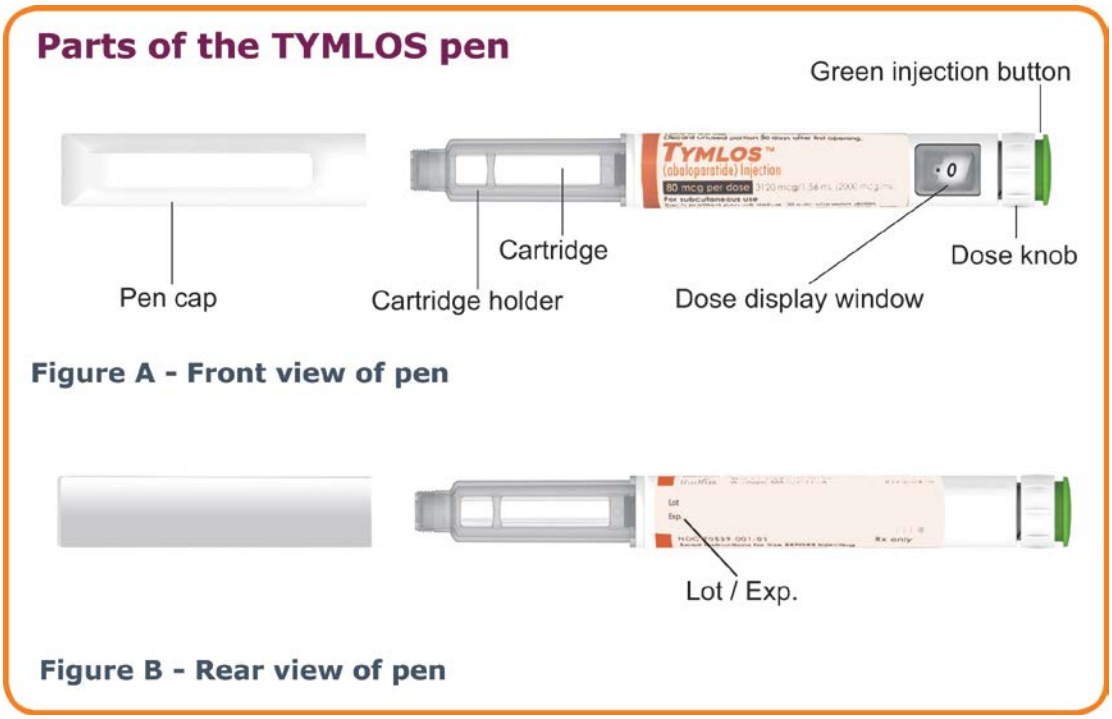

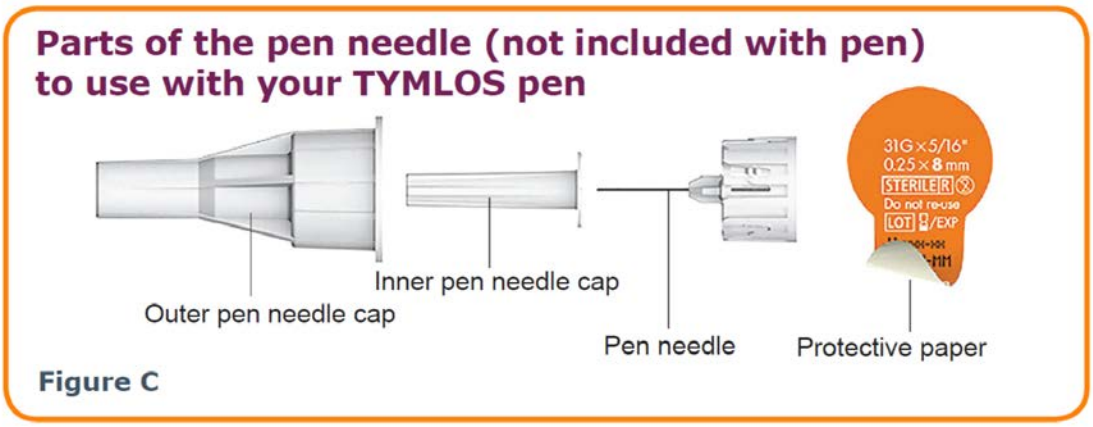

How should I throw away (dispose) of the pen needles and TYMLOS pens?

- Throw away (dispose of) your TYMLOS pen, in a FDA-cleared sharps disposal container or puncture resistant container, 30 days after first opening it even if it still contains unused medicine.
- Put your used pen needles in a FDA-cleared sharps disposal container right away after use. Do not throw away (dispose of) your used sharps disposal container in your household trash.
- If you do not have a FDA-cleared sharps disposal container, you may use a household container that is:
  - made of a heavy-duty plastic,
  - can be closed with a tight-fitting, puncture-resistant lid, without sharps being able to come out,
  - upright and stable during use,
  - leak-resistant, and properly labeled to warn of hazardous waste inside the container.
- When your sharps disposal container is almost full, you will need to follow your community guidelines for the right way to dispose of your sharps disposal container. There may be state or local laws about how you should throw away used needles, syringes, and prefilled syringes.
- For more information about safe sharps disposal, and for specific information about sharps disposal in the state that you live in, go to FDA's website at: https://www.fda.gov/safesharpsdisposal.
- Do not dispose of your used sharps disposal container in your household trash unless your community guidelines permit this. Do not recycle your used sharps disposal container.

For more information about the TYMLOS pen

For more information, go to www.TYMLOS.com or call 1-855-672-3487.

Manufactured in Germany.

Radius Health, Inc.
950 Winter Street
Waltham, MA 02451

10006085-04

Begin the injection.

Check the TYMLOS™ pen

Step 1. Wash and dry your hands.

Step 2. Check the expiration date (Exp.) on the TYMLOS pen.

- Do not use the pen if the expiration date has passed.
- Call your healthcare provider or pharmacist if the expiration date has passed.

Attach pen needle to your TYMLOS pen

Step 3. Pull off the pen cap from your TYMLOS pen. (See Figure D.)

- Check the TYMLOS cartridge. The liquid should be clear, colorless, and free of particles; if not, do not use.

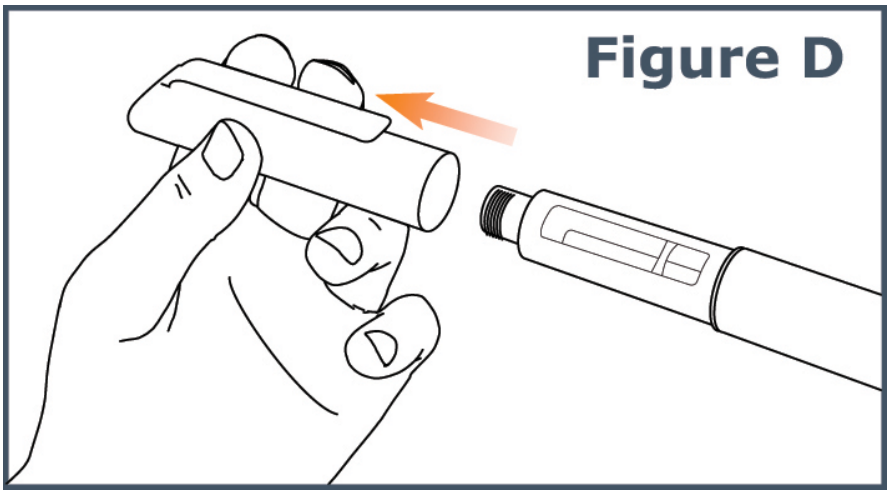

Step 4. Pull off the protective paper from the outer needle cap of your pen needle. (See Figure E.)

Step 5. Keep the needle straight and screw it onto the pen until fixed; a secure fit is ensured even if there is no noticeable stop. Do not over-tighten. (See Figure F.)

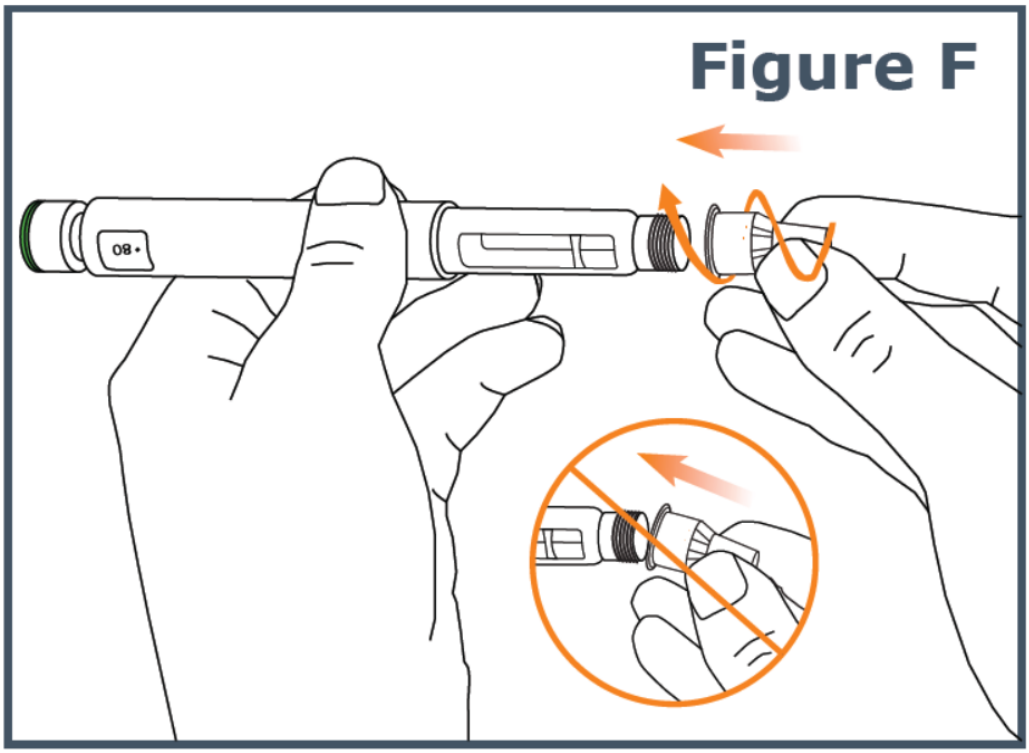

Step 6. Pull off the **outer pen needle cap** from the pen needle and keep it to use after your injection. (See Figure G.)

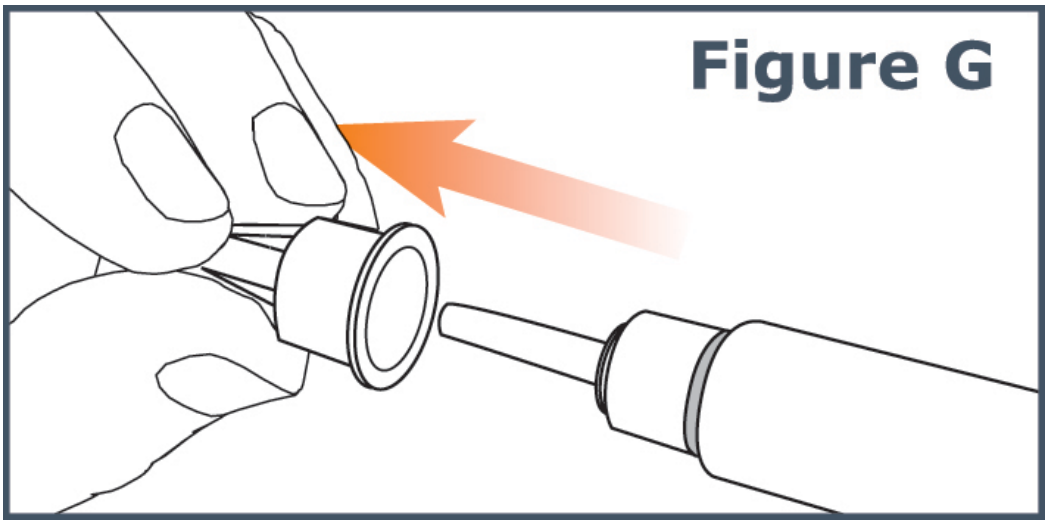

Step 7. Carefully pull off the **inner pen needle cap** and dispose of it. (See Figure H.)

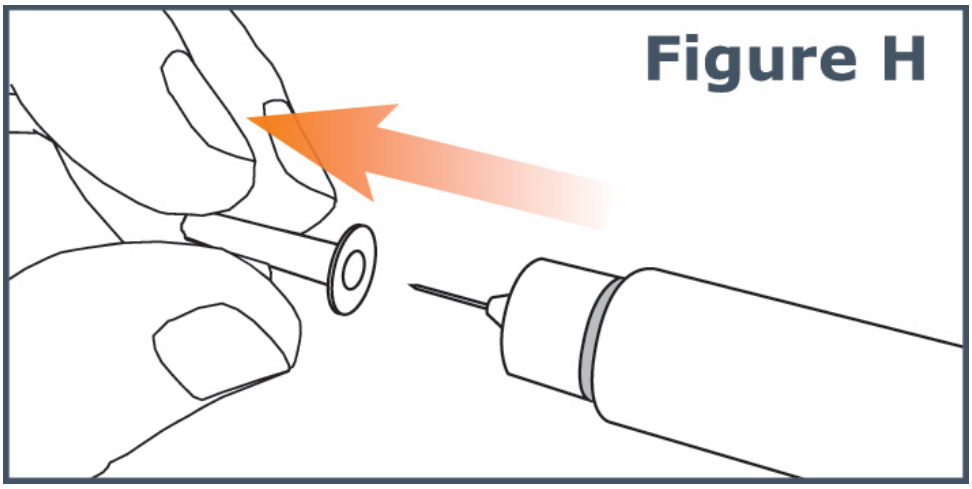

Step 8. If you are using this pen for the first time, go to the **"New pen setup - Day 1 Only" section to prime your pen.**

- If you have already used this pen before, **go to Step 13 for Days 2 through 30**.

New pen setup – Day 1 Only (Priming your TYMLOS pen)

Do not repeat new pen setup on Days 2 through 30.

Step 9. The "**New pen setup"** removes air bubbles (primes your pen). You only need to prime your pen on **Day 1** for each new pen. Otherwise, you will waste medicine.

- **Skip Steps 10 through 12 on Days 2 through 30.**

Step 10. Turn the dose knob on your TYMLOS pen away from you (clockwise) until it stops. (See Figure I.)

Note: You will see " ● 80 " lined up in the dose display window.

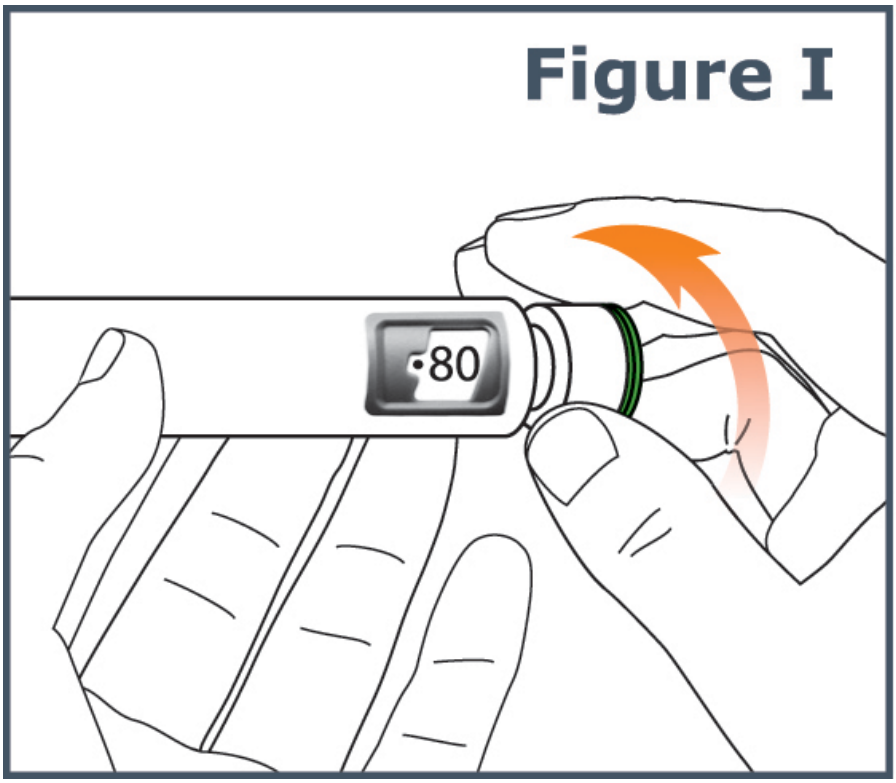
Figure I
80

Step 11. Hold the TYMLOS pen with the pen needle pointing up. Tap lightly with your finger on the cartridge holder to move any air bubbles in the cartridge to the top of the cartridge. (See Figure J.)

Note: Do Step 11 even if you do not see air bubbles.

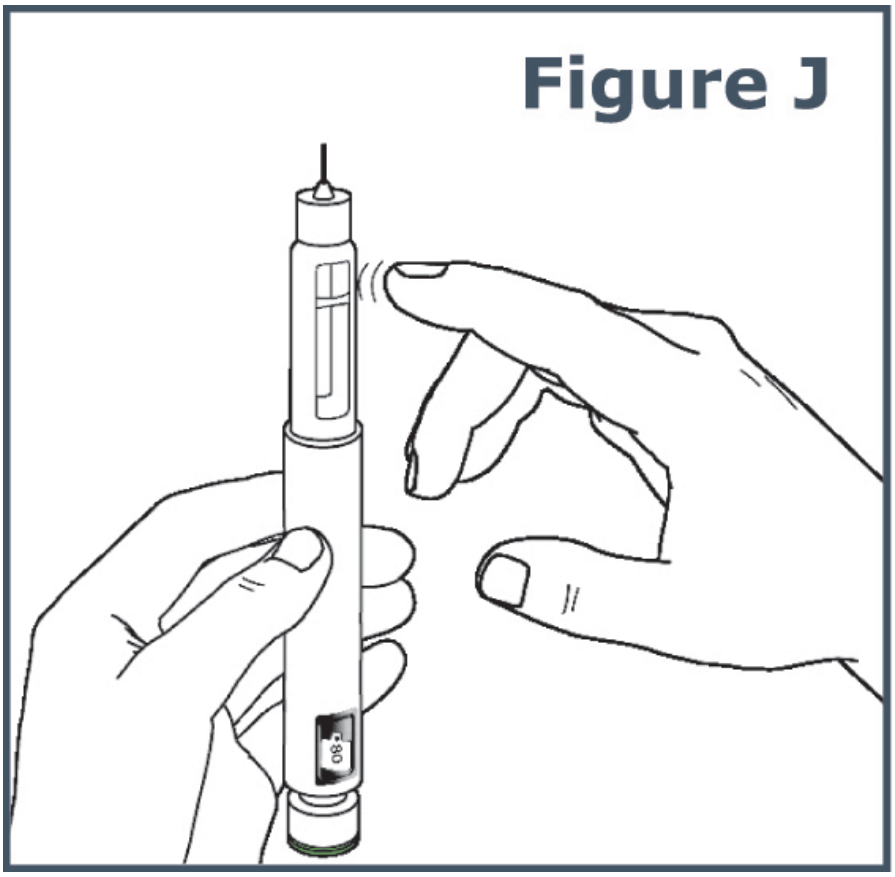

Step 12. Press the green injection button until it will not go any further. (See Figure K).

Note: You should see liquid come out of the needle tip.

Note: You will see "●0" lined up in the dose display window.

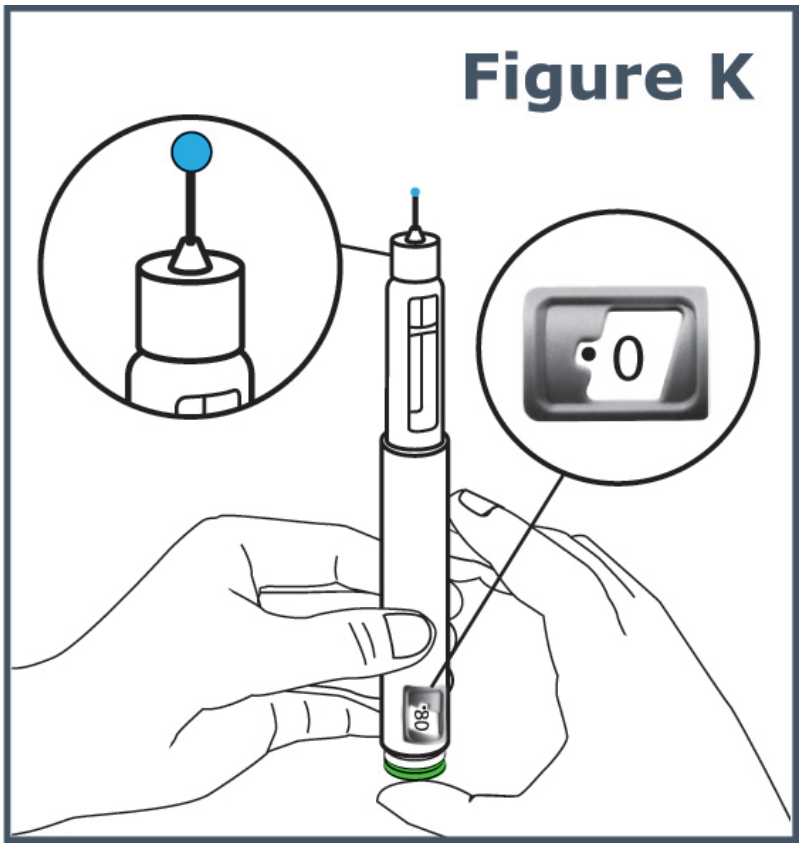

What should I do if liquid does not come out of the needle tip?

- If you do not see a drop of TYMLOS, repeat Steps 10 through 12. A drop of liquid should come out of the needle tip.
- If you still do not see a drop of liquid call your healthcare provider or pharmacist and use a new TYMLOS pen.
- When you are ready to use your new TYMLOS pen for the first time, remember to repeat all Steps 9 through 12 to prime your new TYMLOS pen.

Set the dose on your TYMLOS pen

Do not push the green injection button while setting your dose.

Step 13. Turn the dose knob on your pen away from you (clockwise) until the dose knob stops and "●80" is lined up in the dose display window. (See Figure L.)

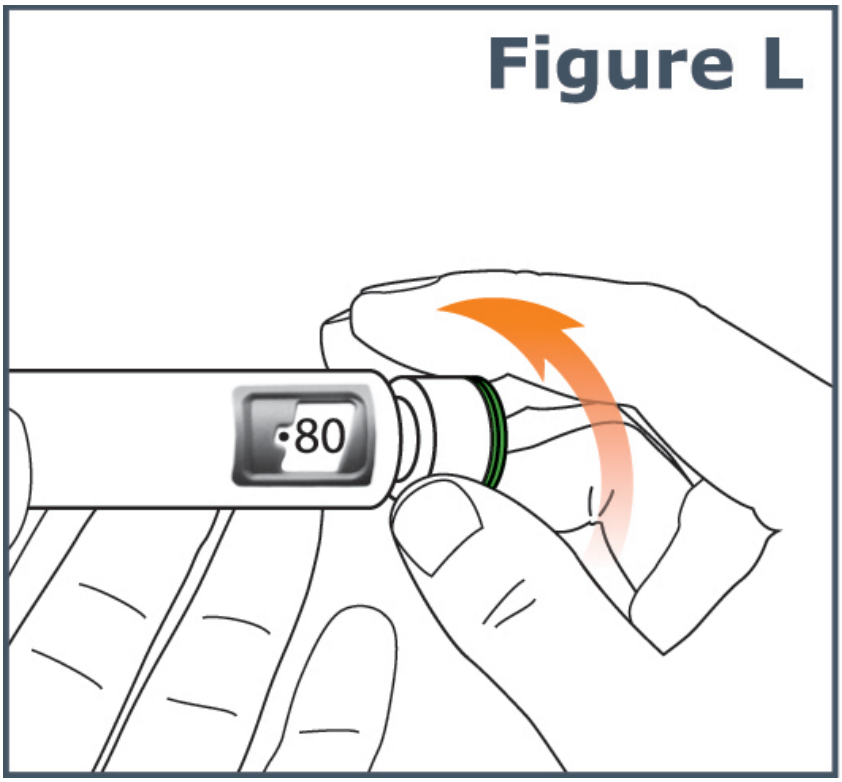

If you set the dose before you are ready to give your injection, turn the dose knob toward you (counter-clockwise) until "●0" is in the dose display window.

If you are not able to set the TYMLOS pen to "●80", dispose of the pen and use a new TYMLOS pen for your injection, repeating Steps 1 through 13.

- If the pen cannot be set to "●80", there is not enough medicine in the TYMLOS pen for your full dose. See "**How should I throw away (dispose) of the pen needles and TYMLOS pens?**" on the other side.

Choose and clean your injection site

Step 14. Injections should be given in the lower stomach area (abdomen). (See Figure M.) Avoid the 2-inch area around your belly button (navel).

For each injection, change (rotate) your injection site around your abdomen. Talk to your healthcare provider about how to change (rotate) your injection site for each injection. Do not use the same injection area for each injection. Do not inject into areas where the skin is tender, bruised, red, scaly, or hard. Avoid areas with scars or stretch marks.

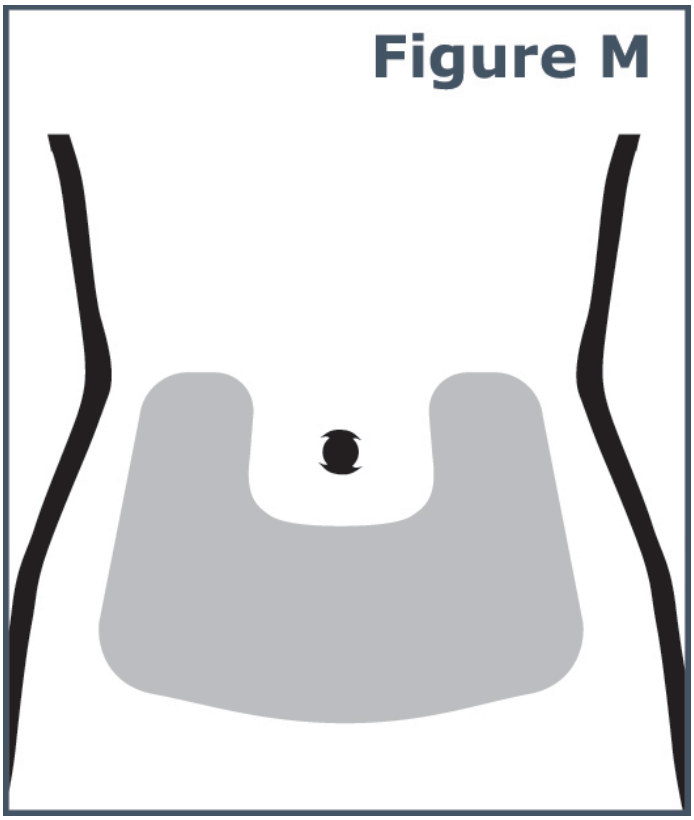

Step 15. Wipe the injection site with an alcohol swab and allow it to dry. Do not touch, fan, or blow on the injection site after you have cleaned it.

Giving your TYMLOS pen injection

Read Step 16 and Step 17 before you give your injection.

Inject your TYMLOS pen the way your healthcare provider has shown you.

Step 16. (See Figure N.)

- Hold the pen so you can see the dose display window during the injection.
- Insert the pen needle straight into your skin.

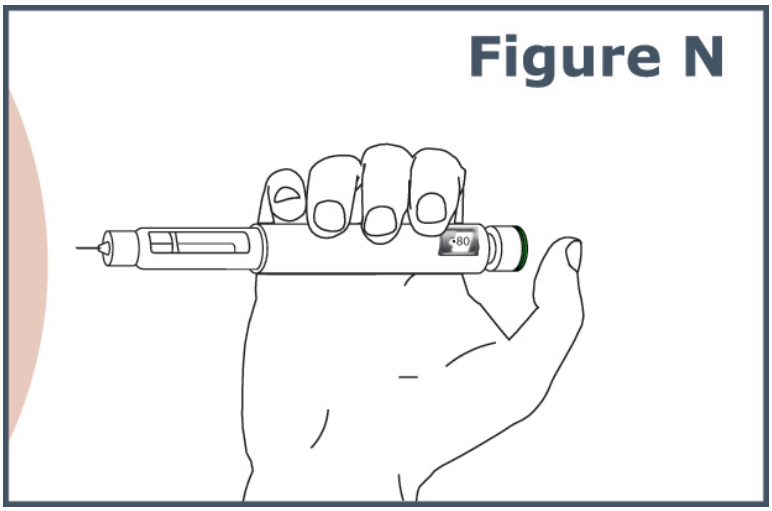

Step 17. (See Figure O.)

- Press the green injection button until it cannot go any further and "●0" is in the dose display window. Do not move the TYMLOS pen after inserting the needle.
- Continue to press the green injection button while counting to 10. Counting to 10 will allow the full dose of TYMLOS to be given.

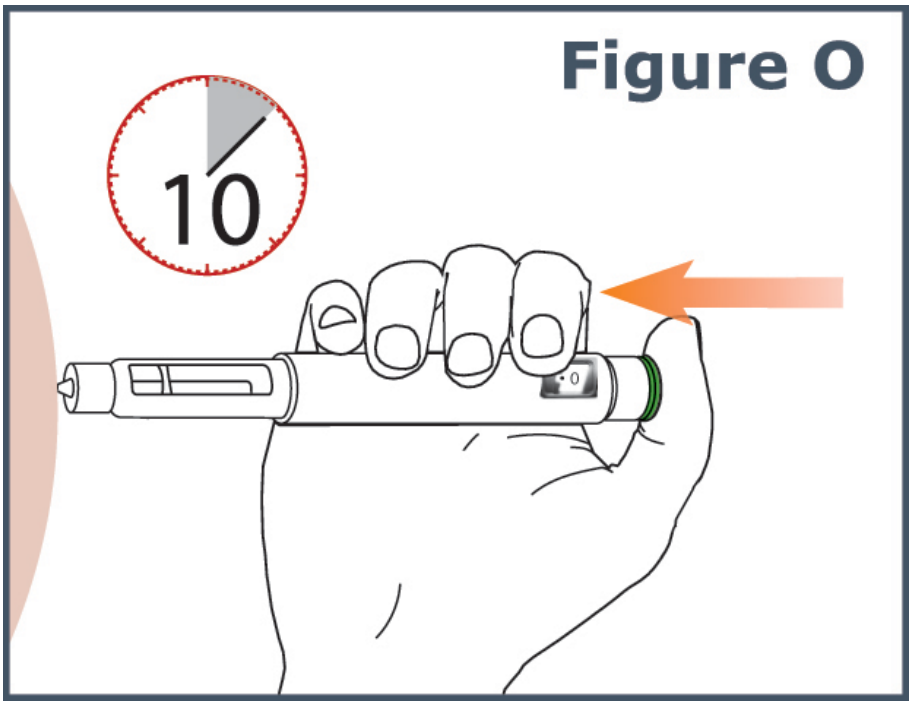

Step 18. After counting to 10, release your finger from the green injection button and slowly remove the TYMLOS pen from the injection site by pulling the pen needle straight out.

Remove the pen needle

Step 19. Carefully place the outer needle cap back on the pen needle. Press on the outer needle cap until it snaps into place and is secure. (See Figure P.)

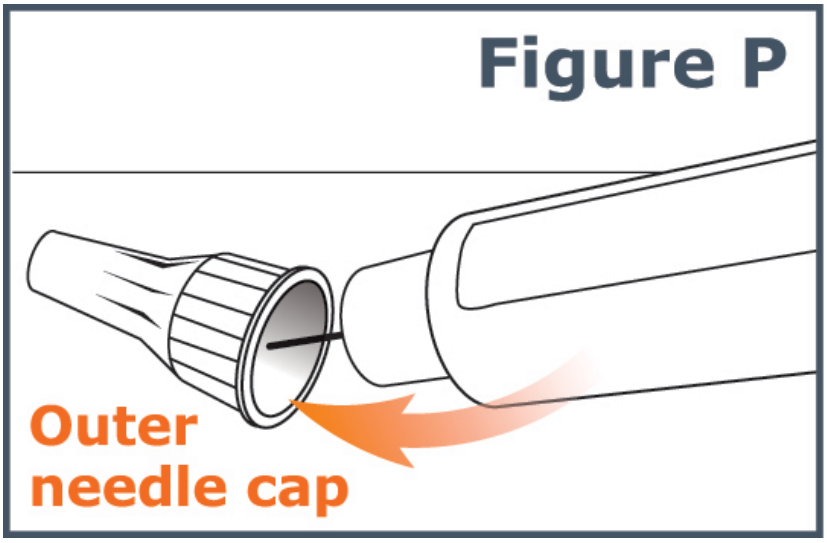

Caution: To prevent needle stick injury, carefully follow Step 20.

Step 20. Unscrew the capped needle (like unscrewing a cap from a bottle). To unscrew the capped needle you may need to turn it 8 or more turns and then gently pull until the capped needle comes off. (See Figure Q.)

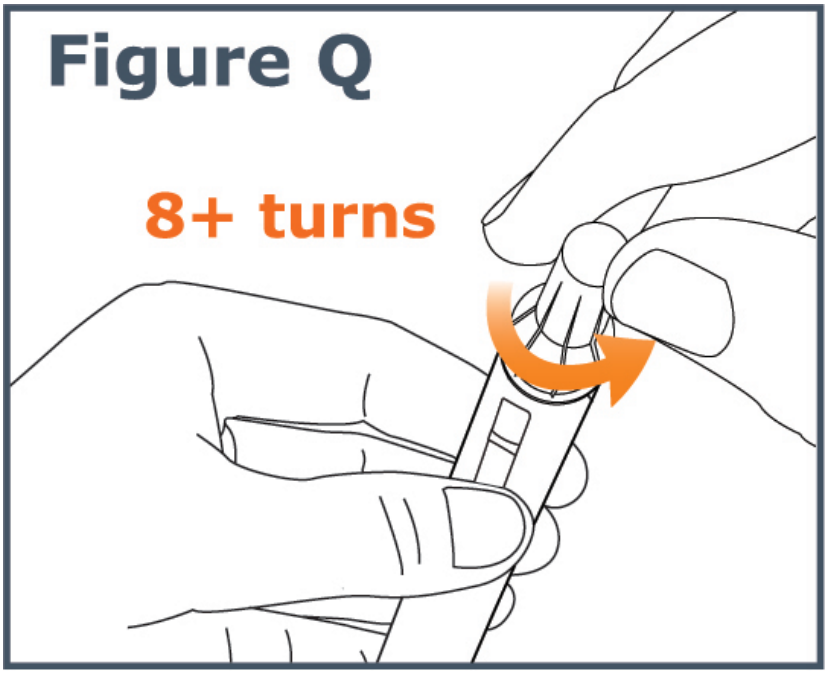

Note: Do not push on the outer needle cap while unscrewing the needle. You should see a gap widening between the outer needle cap and the pen as you unscrew the needle. (See Figure R.)

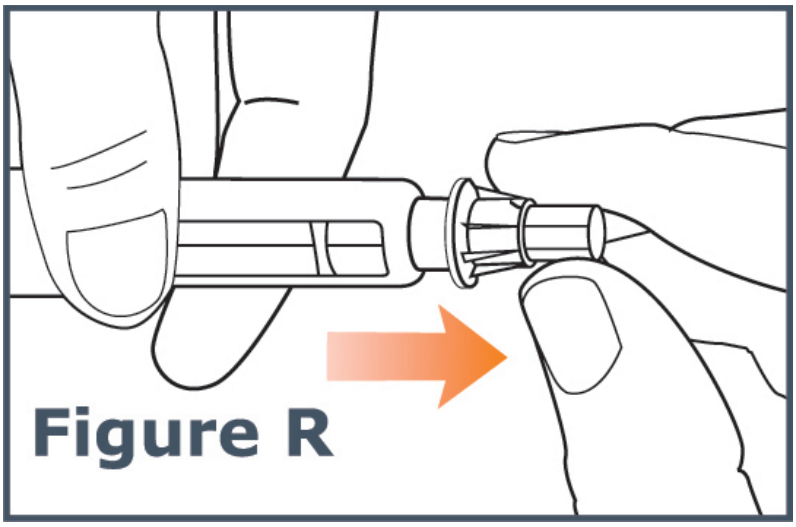

Replace pen cap

Step 21. Firmly replace the pen cap onto the TYMLOS pen. (See Figure S.)

Keep the pen cap on your TYMLOS pen between injections.

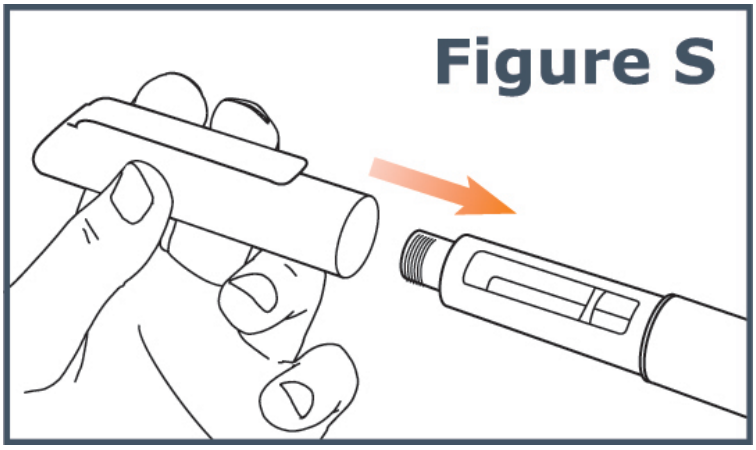

After your injection

Step 22. Press a cotton ball or gauze pad over the injection site and hold for 10 seconds. Do not rub the injection site. You may have slight bleeding. This is normal.

You may cover the injection site with a small adhesive bandage, if needed.

- **Dispose of the pen needle**. See **"How should I throw away (dispose) of the pen needles and TYMLOS pens?"** .

This Instructions for Use has been approved by the U.S. Food and Drug Administration.

Issued:02/2018