CENTER FOR DRUG EVALUATION AND RESEARCH

APPLICATION NUMBER:

211855Orig1s000

CLINICAL REVIEW(S)

CLINICAL REVIEW

Application Type	505(b)(2)
Application Number(s)	NDA 211855
Priority or Standard	Standard
Submit Date(s)	12/13/2018
Received Date(s)	12/13/2018
PDUFA Goal Date	10/13/2019
Division/Office	Division of Neurology Products
Reviewer Name(s)	David E. Jones, M.D.
Review Completion Date	10/10/2019
Established/Proper Name	Diroximel Fumarate
(Proposed) Trade Name	Vumerity
Applicant	Alkermes
Dosage Form(s)	Delayed release capsules
Applicant Proposed Dosing Regimen(s)	Starting dose: 231 mg orally twice a day for 7 days Maintenance dose: after 7 days: 462 mg orally twice a day
Applicant Proposed Indication(s)/Population(s)	Relapsing forms of multiple sclerosis
Recommendation on Regulatory Action	Approval
Recommended Indication(s)/Population(s) (if applicable)	Treatment of relapsing forms of multiple sclerosis (MS), to include clinically isolated syndrome, relapsing-remitting disease, and active secondary progressive disease, in adults

Reference ID: 4504656

Table of Contents

Glossary 8

1. Executive Summary 10
   1.1. Product Introduction 10
   1.2. Conclusions on the Substantial Evidence of Effectiveness 10
   1.3. Benefit-Risk Assessment 10
   1.4. Patient Experience Data 13

2. Therapeutic Context 14
   2.1. Analysis of Condition 14
   2.2. Analysis of Current Treatment Options 15

3. Regulatory Background 17
   3.1. U.S. Regulatory Actions and Marketing History 17
   3.2. Summary of Presubmission/Submission Regulatory Activity 17
   3.3. Foreign Regulatory Actions and Marketing History 18

4. Significant Issues from Other Review Disciplines Pertinent to Clinical Conclusions on Efficacy and Safety 18
   4.1. Office of Scientific Investigations (OSI) 18
   4.2. Product Quality 18
   4.3. Clinical Microbiology 18
   4.4. Nonclinical Pharmacology/Toxicology 18
   4.5. Clinical Pharmacology 18
   4.6. Devices and Companion Diagnostic Issues 18
   4.7. Consumer Study Reviews 19

5. Sources of Clinical Data and Review Strategy 20
   5.1. Table of Clinical Studies 20
   5.2. Review Strategy 22
   5.3. Discussion of Individual Studies 23

6. Review of Relevant Individual Trials Used to Support Efficacy 79

Reference ID: 4504656

7. Integrated Review of Effectiveness 80
7.1. Assessment of Efficacy Across Trials 80
7.1.1. Other Relevant Benefits 80
7.2. Integrated Assessment of Effectiveness 80
8. Review of Safety 81
8.1. Safety Review Approach 81
8.2. Review of the Safety Database 81
8.2.1. Overall Exposure 81
8.2.2. Relevant characteristics of the safety population: 81
8.2.3. Adequacy of the safety database: 81
8.3. Adequacy of Applicant's Clinical Safety Assessments 81
8.3.1. Issues Regarding Data Integrity and Submission Quality 81
8.3.2. Categorization of Adverse Events 82
8.3.3. Routine Clinical Tests 83
8.4. Safety Results 85
8.5. Analysis of Submission-Specific Safety Issues 85
8.6. Safety Analyses by Demographic Subgroups 85
8.7. Specific Safety Studies/Clinical Trials 85
8.8. Additional Safety Explorations 85
8.8.1. Human Carcinogenicity or Tumor Development 85
8.8.2. Human Reproduction and Pregnancy 85
8.8.3. Pediatrics and Assessment of Effects on Growth 85
8.8.4. Overdose, Drug Abuse Potential, Withdrawal, and Rebound 86
8.9. Safety in the Postmarket Setting 86
8.9.1. Safety Concerns Identified Through Postmarket Experience 86
8.9.2. Expectations on Safety in the Postmarket Setting 86
8.9.3. Additional Safety Issues From Other Disciplines 86
9. Advisory Committee Meeting and Other External Consultations 86
10. Labeling Recommendations 86
10.1. Prescription Drug Labeling 86

Reference ID: 4504656

The labeling has not been finalized at the time of this review, but the expectation is that the approved labeling will be essentially identical to the approved labeling for the referenced product, Tecfidera, albeit with the following caveats based on findings from the clinical pharmacology review: 86

10.2. Nonprescription Drug Labeling 87

11. Risk Evaluation and Mitigation Strategies (REMS) 87

12. Postmarketing Requirements and Commitments 87

13. Appendices 88

13.1. References 88

13.2. Financial Disclosure 90

Reference ID: 4504656

Table of Tables

Table 1. Reviewer Table. FDA-approved treatments for relapsing multiple sclerosis 15
Table 2. Reviewer Table. Human studies of diroximel fumarate 20
Table 3. Reviewer Table. Demographic Characteristics, ALK8700-001 25
Table 4. Reviewer Table. Safety Results, ALK8700-001 Part 1 26
Table 5. Reviewer Table. Safety Results ALK8700-001, Part 2 26
Table 6. Reviewer Table. Safety Results, ALK8700-001 Part 3 27
Table 7. Reviewer Table. Demographic Characteristics, ALK8700-A102..... 29
Table 8. Reviewer Table. Safety Results ALK8700-A102 Part B 30
Table 9. Reviewer Table. Demographic Characteristics, ALK8700-A103..... 31
Table 10. Reviewer Table, Safety Results ALK8700-A103..... 32
Table 11., Reviewer Table. Demographic Characteristics, ALK8700-A104..... 34
Table 12. Reviewer Table, Safety Results ALK8700-A104..... 34
Table 13. Reviewer Table, Safety Results ALK8700-A105..... 36
Table 14. Reviewer Table, Safety Results ALK8700-A106..... 39
Table 15. Reviewer Table, Safety Results ALK8700-A107..... 41
Table 16. Reviewer Table, Safety Results ALK8700-A108..... 42
Table 17. Reviewer Table. ALKS8700-A109 Treatment Emergent Adverse Events..... 45
Table 18. Reviewer Table. Demographic Characteristics, ALK8700-A110..... 47
Table 19. Reviewer Table. ALKS8700-A110 Treatment Emergent Adverse Events..... 47
Table 20. Reviewer Table. Demographic Characteristics, ALK8700-A301..... 53
Table 21. Reviewer Table. MS Disease Characteristics, ALK8700-A301 54
Table 22. Reviewer Table. ALKS8700-A301 Study Duration. 55
Table 23. Reviewer Table. Serious adverse events (SAE) in ALK8700-A301..... 56
Table 24. Reviewer Table. TEAE in ALK8700-A301 58
Table 25. Reviewer Table. ODE-1 Analysis of TEAE in ALK8700-A301..... 59
Table 26. Reviewer Table, TEAE leading to discontinuation of ALK8700-A301..... 60
Table 27. Reviewer Table. TEAE graded as severe in ALK8700-A301..... 60
Table 28. Applicant Table. Number of Subjects with Significant Change in Vital Signs 62
Table 29. Applicant Table. Lymphopenia with ALKS 8700 stratified by grade 63
Table 30. Applicant Table. Clinically significant liver function abnormalities in ALK8700-A301.. 64
Table 31. Reviewer Table. Demographic Characteristics, ALK8700-A302 Part A..... 71
Table 32. Reviewer Table. MS Disease Characteristics, ALK8700-A302 Part A 71
Table 33. Reviewer Table. TEAE in ALKS 8700-A302, Part A..... 74
Table 34. Reviewer Table. ODE-1 Safety Analysis, ALK8700-A302, Part A 75
Table 35. Reviewer Table, TEAE leading to discontinuation of ALK8700-A302, Part A..... 76
Table 36. Reviewer Table. TEAE graded as severe in ALK8700-A302, Part A 76
Table 37. Applicant Table. Number of Subjects with Significant Change in Vital Signs 77
Table 38. Applicant Table. Significant liver function abnormalities in ALK8700-A302, Part A..... 79
Table 39. Efficacy results of annualized relapse rate and proportion relapsing, intention to treat population of Tecfidera pivotal trials..... 80

Reference ID: 4504656

APPEARS THIS WAY ON ORIGINAL

Reference ID: 4504656

Table of Figures

Figure 1. Applicant Figure. ALK 8700-001 Part 2 Study Schematic..... 24
Figure 2. Applicant Figure. ALK 8700-001 Part 3 Study Schematic..... 24
Figure 3. Applicant Figure. Study ALK870-A102 Study Schematic..... 28
Figure 4. Applicant Figure. ALK8700-A103 Study Design 31
Figure 5. Applicant Figure. ALK8700-A104 Study Design 33
Figure 6. Applicant Figure. ALK8700-A015 Study Design 36
Figure 7. Applicant Figure. ALK8700-A106 Study Design 38
Figure 8. Applicant Figure. ALK8700-A107 Study Design 40
Figure 9. Applicant Figure. ALKS8700-A109 Study Design..... 44
Figure 10. Applicant Figure. ALK8700-A110 Study Design. 46
Figure 11. Reviewer Table. Phase 1 AEs Potentially Attributable to Diroximel Fumarate..... 49
Figure 12. Applicant Figure. ALK8700-A301 Study Design..... 50
Figure 13. Applicant Figure. Change in lymphocyte counts in ALK 8700-A301..... 63
Figure 14. Sponsor Table. TEAE stratified by eGFR category in ALK8700-A301..... 66
Figure 15. Applicant Figure. ALK8700-A302 Study Design 68
Figure 16. Applicant Figure. Mean Change in Lymphocytes - Part A of ALK8700-A302..... 78
Figure 17. Applicant Figure. Mean Change in AST - Part A of ALK8700-A302..... 78
Figure 18. Applicant Table. Schedule of Assessments, ALK8700-A301 84

Reference ID: 4504656

Glossary

AC	advisory committee
AE	adverse event
AR	adverse reaction
BBB	blood brain barrier
BRF	Benefit Risk Framework
CDER	Center for Drug Evaluation and Research
CDTL	Cross-Discipline Team Leader
CFR	Code of Federal Regulations
CMC	chemistry, manufacturing, and controls
CNS	Central Nervous System
COSTART	Coding Symbols for Thesaurus of Adverse Reaction Terms
CRF	case report form
CRO	contract research organization
CRT	clinical review template
CSR	clinical study report
CSS	Controlled Substance Staff
DMC	data monitoring committee
DMF	dimethyl fumarate
DR	delayed release
DRF	diroximel fumarate
EBV	Epstein Barr Virus
ECG	electrocardiogram
eCTD	electronic common technical document
ETASU	elements to assure safe use
FDA	Food and Drug Administration
FDAAA	Food and Drug Administration Amendments Act of 2007
FDASIA	Food and Drug Administration Safety and Innovation Act
GFSS	Global Flushing Severity Score
GGISIS	Global GI Symptom and Impacts Scale
GCP	good clinical practice
GRMP	good review management practice
GSRS	Gastrointestinal Symptom Rating Scale
HES	2-hydroxyethyl succinimide
ICH	International Council for Harmonization
IGISIS	Individual GI Symptoms and Impact Scale
IND	Investigational New Drug Application
ISE	integrated summary of effectiveness

Reference ID: 4504656

ISS	integrated summary of safety
ITT	intent to treat
MedDRA	Medical Dictionary for Regulatory Activities
mITT	modified intent to treat
MMF	monomethyl fumarate
MRI	magnetic resonance imaging
MS	multiple sclerosis
NCI-CTCAE	National Cancer Institute-Common Terminology Criteria for Adverse Event
NDA	new drug application
NME	new molecular entity
Nrf2	nuclear factor (erythroid-derived 2)-Related Factor 2
OCS	Office of Computational Science
ODE-1	Office of Drug Evaluation 1
OPQ	Office of Pharmaceutical Quality
OSE	Office of Surveillance and Epidemiology
OSI	Office of Scientific Investigation
PD	pharmacodynamics
PI	prescribing information or package insert
PK	pharmacokinetics
PMC	postmarketing commitment
PMR	postmarketing requirement
PP	per protocol
PPI	patient package insert
PPMS	primary progressive multiple sclerosis
PRO	patient reported outcome
PT	preferred term
REMS	risk evaluation and mitigation strategy
RMS	relapsing multiple sclerosis
SAE	serious adverse event
SAD	single ascending dose
SAP	statistical analysis plan
SOC	system organ class
SPMS	secondary progressive multiple sclerosis
TEAE	treatment emergent adverse event
WBC	white blood cell

Reference ID: 4504656

1. Executive Summary

1.1. Product Introduction

Diroximel fumarate (DRF, Vumerity) is an orally administered fumaric acid ester that was developed to treat relapsing forms of multiple sclerosis (RMS). DRF is presystemically hydrolyzed by intestinal esterases into monomethyl fumarate (MMF) and a major inactive metabolite (2-hydroxyethyl succinimide [HES]), after which MMF (and HES) are absorbed from the small intestine.

MMF is the primary active metabolite of dimethyl fumarate (DMF, Tecfidera), which was approved for the treatment of RMS in March, 2013. The clinical pharmacology review of Tecfidera assumes that "it is the pharmacology of MMF that is most relevant to this application" because MMF was quantifiable in serum whereas DMF was not. Because the clinical efficacy of DMF is deemed to be driven by MMF, the pharmacokinetic (PK) and pharmacodynamic (PD) evaluations in the Tecfidera application rely entirely upon MMF.

While the exact mechanism of action of MMF has not been elucidated, it appears to exert some of its therapeutic effects through activation of the nuclear factor (erythroid-derived 2)-related factor 2 (Nrf2) antioxidant response pathway. This transcriptional pathway enables cells to respond to a variety of potentially toxic stimuli by upregulating antioxidant response genes, reducing inflammatory responses in both peripheral and central immune cells, and protecting neurons by reducing inflammatory injury thereby inhibiting apoptosis (Yadav et al, 2019).

Assuming demonstration of an adequate pharmacologic bridge between DRF and DMF, this NDA utilizes the 505(b)(2) regulatory pathway, relying on DMF as the referenced product.

1.2. Conclusions on the Substantial Evidence of Effectiveness

This 505(b)(2) submission does not include efficacy studies of DRF but instead relies on the referenced product, Tecfidera, to provide substantial evidence of effectiveness. Tecfidera was approved as a treatment for RMS in 2013 based on two adequate, well-controlled clinical trials showing that Tecfidera reduced both the number and frequency of relapses and the number of new MRI lesions (Gold 2012, Fox 2012); Tecfidera also reduced the time to 3-month confirmed disability progression in the Gold (2012) study. Demonstration of the bioequivalence of MMF derived from DRF to that derived from Tecfidera would allow DRF to rely on the effectiveness data for Tecfidera.

1.3. Benefit-Risk Assessment

Reference ID: 4504656

Benefit-Risk Integrated Assessment

Dimethyl fumarate (DMF, Tecfidera) was approved in 2013 for the treatment of adults with relapsing forms of MS, so the benefits and risks of this drug are well established. In vivo, intestinal esterases rapidly convert DMF into monomethyl fumarate (MMF), which is subsequently absorbed by the small intestine, so after taking Tecfidera, MMF is quantifiable in the serum but DMF is not. Given this, MMF is assumed to drive the pharmacology, clinical effects, and safety of Tecfidera.

Similarly, intestinal esterases rapidly convert diroximel fumarate (DRF, Vumerity) to MMF and an inactive metabolite (HES), after which both are systemically absorbed by the small intestine; therefore, one would expect DRF to have similar benefits and risks as DMF, assuming that an appropriate pharmacologic bridge (including C_{max} and AUC) is established between DRF and DMF, and that HES is truly inactive and contributes no clinically meaningful outcomes.

Because this NDA utilizes the 505(b)(2) regulatory pathway relying on Tecfidera as the referenced product, efficacy data are not required and are not discussed in this review. Safety data from the Phase 1 pharmacokinetic (PK) studies of DRF, the ongoing open-label Phase 3 study of DRF, and an ongoing small Phase 3 study comparing the GI tolerability of DRF and DMF do not raise any new safety concerns. Given the similarity in the PK/PD characteristics and the safety profiles of DRF and DMF, DRF merits approval for the treatment of relapsing multiple sclerosis in adults.

Benefit-Risk Dimensions

Dimension	Evidence and Uncertainties	Conclusions and Reasons
Analysis of Condition	• Relapsing multiple sclerosis is at least in part an "inflammatory" disease of the central nervous system characterized by episodes of acute damage to myelin and axons (relapses) and the development of new MRI lesions, although it appears that the disease becomes less "inflammatory" and more "degenerative" over time. Worsening disability from "inflammatory" disease is due to incomplete recovery from inflammatory events; conversely, disability progression from "degenerative" disease	Modulation of the immune system likely reduces damage accrued from the "inflammatory" aspect of the disease, should delay worsening disability from relapses, and may postpone the onset of insidious disability progression due to the "degenerative" phase of the disease.

Reference ID: 4504656

Dimension	Evidence and Uncertainties	Conclusions and Reasons
	is insidious but of unclear etiology. With current metrics, distinguishing disability progression due to "degeneration" from disability worsening from "inflammation" is very difficult.	
Current Treatment Options	• There are over a dozen agents approved for relapsing forms of MS, all of which appear to predominantly affect the "inflammatory" aspect of the disease. Data for these agents strongly suggest that they reduce both relapse rates and MRI activity; however, the efficacy of some of these agents in reducing confirmed disability progression at 12 or 24 weeks is questionable given less robust treatment effects and conflicting results on these endpoints among trials. • This application uses evidence from multiple PK studies in an attempt to form a pharmacologic bridge between DRF and DMF and allow DRF to rely on the efficacy and safety data of the referenced product, Tecfidera.	All currently approved drugs for RMS, including DMF, appear to target the immune system. Treatment with these drugs results in a statistically significant reduction in relapse rates, should lead to a reduction in disability worsening, and may delay disability progression.
Benefit	• Dimethyl fumarate has been shown to reduce relapse rates and potentially delay 12-week confirmed disability progression in individuals with RMS.	Assuming an adequate pharmacologic bridge between diroximel fumarate and Tecfidera, the beneficial treatment effects of diroximel fumarate should approximate those of the referenced product.
Risk and Risk Management	• The risks of fumaric acids are known to include flushing, gastrointestinal upset, lymphopenia, liver injury, anaphylaxis, angioedema, and progressive multifocal leukoencephalopathy. These risks can be managed with clinical awareness and patient education.	Assuming an adequate pharmacologic bridge between diroximel fumarate and Tecfidera, the safety of diroximel fumarate should be similar to that of the referenced product.

Reference ID: 4504656

1.4. Patient Experience Data

Patient Experience Data Relevant to this Application (check all that apply)

☐	The patient experience data that was submitted as part of the application include:			Section where discussed, if applicable
	☒	Clinical outcome assessment (COA) data, such as the Individual GI Symptom and Impact Scale (IGISIS) and the Global GI Symptom and Impact Scale (GGISIS) scales		Sec 5.3.9 ALK8700-A302
		☒	Patient reported outcome (PRO)	
		☐	Observer reported outcome (ObsRO)	
		☐	Clinician reported outcome (ClinRO)	
		☐	Performance outcome (PerfO)	
	☐	Qualitative studies (e.g., individual patient/caregiver interviews, focus group interviews, expert interviews, Delphi Panel, etc.)		
	☐	Patient-focused drug development or other stakeholder meeting summary reports		
	☐	Observational survey studies designed to capture patient experience data		
	☐	Natural history studies		
	☐	Patient preference studies (e.g., submitted studies or scientific publications)		
	☐	Other: (Please specify)		
☐	Patient experience data that were not submitted in the application, but were considered in this review:			
		☐	Input informed from participation in meetings with patient stakeholders	
		☐	Patient-focused drug development or other stakeholder meeting summary reports	
		☐	Observational survey studies designed to capture patient experience data	
		☐	Other: (Please specify)	
☐	Patient experience data was not submitted as part of this application.			

Interim results from ALK8700-A302, an ongoing, Phase 3 study comparing the GI tolerability of DMF and DRF, are included in this NDA.

Reference ID: 4504656

2. Therapeutic Context

2.1. Analysis of Condition

Multiple sclerosis (MS) is a chronic inflammatory condition of the central nervous system (CNS) that likely occurs when a genetically susceptible individual is exposed to an environmental trigger. MS is one of the most common causes of non-traumatic neurologic disability in young adults, and recent estimates suggest that almost one million people in the Unites States have this disease; therefore, the economic impact of MS, estimated at ten billion US dollars annually in the US in 2013, is huge (Wallin et al., 2019; Reich et al., 2018). Approximately 50% of people with untreated MS have severe ambulatory limitations within 20 years of disease onset, and MS reduces life-expectancy by 5-10 years (Confavreux and Vukusic, 2006).

The International MS Genetics Consortium (IMSGC) has identified over 230 genetic loci that contribute to the risk of developing MS, and most of these genes are associated with the function of the immune system. The environmental triggers for MS are less well defined, although vitamin D deficiency and delayed exposure to the Epstein-Barr Virus (EBV) are often considered to be risk factors for MS. The pathophysiology of MS includes a well-described inflammatory (or immune-mediated) component, which seems predominant earlier in the disease, and what is termed a “degenerative” component, which is less well understood but is felt to predominate later in the disease (Compston and Coles, 2008; Reich et al., 2018). The currently recognized clinical phenotypes of the disease include relapsing-remitting multiple sclerosis (RRMS), secondary progressive multiple sclerosis (SPMS), and primary progressive multiple sclerosis (PPMS); the modifier “active” can be used to indicate relapses or MRI activity, and the modifier “progression” can be used to indicate disability progression not attributable to relapses. Conversely, the term “worsening” should be used for disability progression attributable to relapses (Lublin et al., 2014).

About 85% of people who develop MS begin with RRMS, which has a predilection for women and an average age of diagnosis of approximately 30 years (Weinshenker et al., 1989). RRMS is characterized by recurrent inflammatory episodes, termed “relapses,” in which auto-reactive lymphocytes marginate across the blood-brain barrier (BBB) and enter the CNS, leading to acute injury to myelin, oligodendrocytes, and axons and potentially causing new or worsening neurologic deficits. Potential targets of acute inflammatory injury include the subcortical white matter, brainstem, optic nerve, and spinal cord; however, recent data suggests that the grey matter and neurons can also be a target of this inflammatory attack and that these cortical lesions may correlate better with disability (Compston and Coles, 2008; Reich et al., 2018). The diagnostic criteria for RRMS require at least one demonstrable clinical attack plus clinical or radiologic evidence of disease dissemination “in time and space,” which previously meant that a patient had to experience at least two clinically or radiologically distinct episodes to be diagnosed with RRMS; however, the most current iteration of the McDonald diagnostic criteria

Reference ID: 4504656

allow the coexistence of enhancing and nonenhancing lesions or the presence of increased intrathecal immunoglobulin synthesis to support dissemination in time (Polman et al., 2011; Thompson et al., 2018). Although early relapses may be followed by complete recovery, subsequent relapses may be partially associated with an accumulation of residual deficits and increased disability (Confavreux et al., 1980; Weinshenker et al., 1989).

Over time, a slow, insidious progression of disability--that appears to be independent of the occurrence of relapses--is seen in many patients with RRMS (Weinshenker et al., 1989; Confavreux et al., 2000; Tremlett et al., 2009). On average, transition into this phase of the disease, termed SPMS, occurs ~15 years after the diagnosis of RRMS, although frequent relapses soon after diagnosis (and incomplete recovery from early relapses) appears to hasten this transition (Confavreux 2003; Paz Soldan 2015). The progression of disability in SPMS is felt to be driven by the poorly understood "degenerative" aspect of the disease. Hypotheses regarding the pathophysiology of this "degenerative process" in SPMS include a bioenergetic deficit from mitochondrial dysfunction, compartmentalized inflammation behind an intact blood-brain barrier, increased free radicals, or simply "neurodegeneration" (Mahad et al, 2015). Relapses and new MRI lesions can still occur in SPMS but are less frequent, especially later in this phase of the disease (Correale et al, 2017). Reducing the number of relapses early in the disease may preserve an individual's "functional reserve" and delay the transition into SPMS.

2.2. Analysis of Current Treatment Options

There are over a dozen MS drugs that are FDA-approved to treat relapsing forms of MS, including clinically isolating syndrome (CIS), relapsing-remitting MS (RRMS), and active SPMS. Therapies for RMS reduce the annualized relapse rate in patients with RMS by approximately 30 to 60% but unfortunately achieve inconsistent results on disability metrics, which is not surprising because of the different aspects of the pathophysiology of MS and the incomplete effect of relapses on disability progression. Even though meta-analyses of clinical trials in RMS (Sormani et al, 2009; Sormani and Bruzzi, 2013) suggest that the development of new MRI lesions may be a surrogate for relapses, the well-described "clinic-radiologic paradox" and the relatively weak correlation between MRI activity and clinical disability suggest that MRI is not a good measure of how a patient functions, feels, or survives, thus lessening the importance of this endpoint from a regulatory point of view (Barkhof 1999, Sormani et al 2010). See Table 1 for a list of currently approved MS medications.

Table 1. Reviewer Table. FDA-approved treatments for relapsing multiple sclerosis

Approved Drug	Product Name	Relevant Indication	Year Approved	Route & Frequency of Administration	Efficacy Information	Major Safety Concerns
Beta interferon 1b	Betaseron (Betaferon in EU)	Relapsing forms of MS	1993	subcutaneous every other day	32% reduction in ARR	Hepatotoxicity, depression

Reference ID: 4504656

Approved Drug	Product Name	Relevant Indication	Year Approved	Route & Frequency of Administration	Efficacy Information	Major Safety Concerns
Beta interferon 1a	Avonex	Relapsing forms of MS	1996	IM weekly	32% reduction in ARR	Hepatotoxicity, depression
Glatiramer acetate[1]	Copaxone	Relapsing forms of MS	1996	subcutaneous daily[2]	29% reduction in ARR	None
Mitoxantrone	Novantrone	Relapsing forms of MS	2000	IV every 3 months	60% reduction in ARR; 64% reduction in disability	Cardiotoxicity, leukemia
Beta interferon 1a	Rebif	Relapsing forms of MS	2002	subcutaneous three times weekly	32% reduction in ARR	Hepatotoxicity, depression
Natalizumab	Tysabri	Relapsing forms of MS	2004	IV every 4 weeks	61% reduction in ARR	Boxed warning for Progressive Multifocal Leukoencephalopathy (PML)
Beta interferon 1b	Extavia	Relapsing forms of MS	2009	subcutaneous every other day	30% reduction in ARR	Hepatotoxicity, depression
Fingolimod[3]	Gilenya	Relapsing forms of MS	2010	orally once daily	55% reduction in ARR	1st dose bradycardia, macular edema, fetal risk, serious infection
Teriflunomide	Aubagio	Relapsing forms of MS	2012	orally once daily	31% reduction in ARR	Boxed warnings for hepatotoxicity and teratogenicity
Dimethyl fumarate	Tecfidera	Relapsing forms of MS	2013	orally once daily	49% reduction in ARR	Lymphopenia, PML
PEGylated Interferon Beta	Plegridy	Relapsing forms of MS	2014	subcutaneous every 2 weeks	36% reduction in ARR	Hepatotoxicity, depression
Alemtuzumab[4]	Lemtrada	Relapsing forms of MS after inadequate responses to 2 or more other MS treatments	2015	2 intravenous courses 12 months apart	49% reduction in ARR	Boxed warnings for serious/fatal autoimmune conditions, serious and life-threatening infusion reactions, serious and life-threatening stroke within three days of infusion, and increased risk of malignancies
Ocrelizumab	Ocrevus	Relapsing and Primary Progressive MS	2016	IV every 2 weeks x 2 then IV x1 every 6 months	46% reduction in ARR (RMS); 24% reduction in disability progression (primary progressive MS)	Infusion reactions, increased risk of breast cancer

Reference ID: 4504656

Approved Drug	Product Name	Relevant Indication	Year Approved	Route & Frequency of Administration	Efficacy Information	Major Safety Concerns
Monomethyl fumarate	Bafiertam	Relapsing forms of MS	2018 [5]	Oral twice daily	44-53% reduction in ARR	Lymphopenia, PML
Siponimod	Mayzent	Relapsing forms of MS	2019	Oral once daily	55% reduction in ARR	1st dose bradycardia, macular edema, fetal risk, serious infections
Cladribine	Mavenclad	Relapsing forms of MS	2019	2 oral courses one year apart	58% reduction in ARR	Boxed warning for malignancy and teratogenicity; lymphopenia, infections, liver injury

[1] Glatopa and other generic versions of the glatiramer acetate are now available.
[2] Daily and 3 times weekly formulations of glatiramer acetate are now available.
[3] Indicated for ≥ 10 years old
[4] Not indicated for use in patients less than 18 years of age due to safety concerns
[5] Tentatively approved pending patent expirations, utilizing the 505(b)(2) regulatory pathway and relying on Tecfidera as the referenced product.

3. Regulatory Background

3.1. U.S. Regulatory Actions and Marketing History

Diroximel fumarate (ALKS 8700) currently is not marketed in the United States for any indication. Like the referenced product dimethyl fumarate (DMF, Tecfidera) upon which this 505(b)(2) application relies, diroximel fumarate (DRF) is rapidly converted to monomethyl fumarate (MMF) and an inactive metabolite (HES) by intestinal esterases before being absorbed systemically. The US Food and Drug Administration (FDA) approved Tecfidera for use in adults with RMS on March 27, 2013. MMF is the primary and only known active metabolite of DMF, and only MMF is detectable in serum after ingesting DMF; therefore, the approval of Tecfidera was based on data using MMF as a pharmacokinetic marker.

3.2. Summary of Presubmission/Submission Regulatory Activity

Initial Pre-IND (IND 120446) meeting request: January 23, 2014

Pre-IND meeting written response: March 21, 2014

Original IND submission: June 5, 2014
The submission was made with intention to file the NDA under the 505(b)(2) pathway, relying on Tecfidera as the reference listed drug (RLD).

Reference ID: 4504656

IND may proceed letter issued: July 31, 2014

End of Phase 2 meeting: August 4, 2015

Pediatric initial study plan agreement: November 30, 2016

Pre-NDA meeting: June 19, 2018

NDA 211855 submission: December 13, 2018
Filed as a 505(b)(2) pathway application, relying on Tecfidera as the reference product.

3.3. Foreign Regulatory Actions and Marketing History

Diroximel fumarate is not approved or marketed anywhere in the world for any indication.

4. Significant Issues from Other Review Disciplines Pertinent to Clinical Conclusions on Efficacy and Safety

4.1. Office of Scientific Investigations (OSI)

An OSI audit was not requested.

4.2. Product Quality

See the Chemistry, Manufacturing, and Control (CMC) review.

4.3. Clinical Microbiology

See the CMC/microbiology review.

4.4. Nonclinical Pharmacology/Toxicology

See the nonclinical pharmacology / toxicology review.

4.5. Clinical Pharmacology

See the clinical pharmacology review.

4.6. Devices and Companion Diagnostic Issues

Not applicable.

Reference ID: 4504656

4.7. Consumer Study Reviews

APPEARS THIS WAY ON ORIG NAL

Reference ID: 4504656

Not applicable.

5. Sources of Clinical Data and Review Strategy

5.1. Table of Clinical Studies

Ten completed Phase 1 studies, and two on-going Phase 3 trials, with DRF are referenced in this NDA. See Table 2 for a listing of these studies, which will be described in more detail in Section 5.3.

Table 2. Reviewer Table. Human studies of diroximel fumarate

Trial Identity	Trial Design	Regimen	Study Endpoints	Treatment Duration / Follow Up	No. of subjects enrolled	Study Population	No. of Centers (and Countries)
Studies to Support Safety							
ALK8700-001	First in human, single-ascending dose; single-dose, 2-treatment, 2-period crossover; single dose, 4 treatment, 4-period crossover	Single dose of DRF 49, 105, 210, 430, 630, 840, or 980 mg *or* DMF 240mg	PK, safety and tolerability of DRF compared to DMF	Single dose on day 9 *or* days 1 and 8 *or* days 1, 8, 15, and 22	104	Healthy adults	1
ALK8700-A102	Food effect (Part A) and multiple ascending dose (Part B)	Single dose of 420mg DRF *or* DRF 210, 430, or 630mg bid	PK, safety and tolerability of DRF	Single dose DRF on days 1 and 4, *or* bid DRF on days 1-5	76	Healthy adults	1
ALK8700-A103	Fasted relative bioavailability	DRF 426mg *or* DMF 240mg	PK, safety, and tolerability of DRF vs DMF	Single dose of DRF *or* DMF days 1 and 8	35	Healthy adults	1
ALK8700-A104	Relative bioavailability after a high-fat meal	DRF 462mg *or* DMF 240mg	Bioavailability, PK, safety, and tolerability of DRF vs DMF	Single dose of DRF *or* DMF on days 1 and 3	42	Healthy adults	1
ALK8700-A105	Mass balance study	Single dose of unlabelled and labelled DRF 462mg	PK of labelled [^{14}C]-DRF and its metabolites	Single dose of DRF on days 1 and 8	10	Healthy adult males	1
ALK8700-A106	Effect of alcohol study	DRF 462mg	Extrinsic Factor (alcohol) PK	Single dose of DRF on days	31	Healthy adults	1

Reference ID: 4504656

Trial Identity	Trial Design	Regimen	Study Endpoints	Treatment Duration / Follow Up	No. of subjects enrolled	Study Population	No. of Centers (and Countries)
				1,8, and 15			
ALK8700-A107	Drug interaction study	DRF 462mg; digoxin 0.25mg	Extrinsic Factor (digoxin) PK	Digoxin on Day 1, digoxin and bid DRF on day 11, bid DRF on days 12-15	24	Healthy adults	1
ALK8700-A108	Renal impairment study	DRF 462mg	Intrinsic Factor (renal impairment) PK	Single dose of DRF on day 1	32	Healthy adult subjects and those with renal impairment	3 (1)
ALK8700-A109	Relative bioavailability after a low / medium-fat meal	DMF 462mg *or* DMF 240mg	Bioavailability, PK, safety, and tolerability of DRF vs DMF	Single dose of DRF *or* DMF on days 1, 4, 7, and 10	48	Healthy adults	1
ALK8700-A110	Thorough QT study	DRF 462 *or* 924 mg, moxifloxacin 400mg, and matching placebo	EKG / QTcF effects, safety, and tolerability of DRF	BID DRF (or placebo) on days 2-5 and 7-10. Single dose DRF on days 6 and 11. Moxifloxacin (or placebo) on days 1 and 12.	65	Healthy adults	1
ALK8700-A301	Long-term, open-label study	DRF 462 mg[b]	Long term safety and tolerability of DRF	BID DRF for up to 96 weeks	696[a]	Relapsing MS	103 (10)
Other studies pertinent to the review of efficacy or safety (e.g., clinical pharmacological studies)							
ALK8700-A302	Double-blind study of GI tolerance with Vumerity vs. Tecfidera	DRF 462 mg *or* DMF 240mg bid[b]	To compare GI tolerance of DRF vs DMF with 2 scales[c]	BID DMF *or* DRF for 5-weeks	187[a]	Relapsing MS	65 (2)

[a] As of 3/30/2018.
[b] Start with 231mg po bid x 1 week, then titrate to 462mg po bid.
[c] Individual GI Symptom and Impact Scale (IGISIS) and the Global GI Symptom and Impact Scale (GGISIS) scales

Reference ID: 4504656

5.2. Review Strategy

Because this is a 505(b)(2) application relying on pharmacokinetic bridging to use Tecfidera as the referenced product, the application does not contain efficacy studies of DRF; however, this review will focus on the safety of DRF. In the submitted materials for the pre-NDA meeting , the Applicant proposed that it "does not intend to pool AE data for any of the Phase 1 or 3 studies," and FDA concurred that this appears reasonable in the minutes for this 19Jun 2018 meeting. Given this, the Phase 1 and 3 studies will be individually reviewed in this section to assess the safety of DRF in healthy subjects and in those with RMS, respectively. Although the safety of Tecfidera should inform the safety of DRF, care will be taken to assess for other, unexpected safety signals associated with diroximel fumarate and its reportedly inactive metabolite (HES).

The safety population for this NDA includes all subjects who received at least one dose of the study drug in the DRF studies. The Applicant defined an Adverse Event (AE) as follows:

- "An AE is any untoward medical occurrence in a patient or clinical investigation subject administered a pharmaceutical product. The occurrence, which may or may not have a causal relationship with the investigational treatment, may include any clinical or laboratory change that does not commonly occur in that subject and is considered clinically significant."

Treatment emergent adverse events (TEAE) were those AEs that occurred during the treatment phase of the study and were identified by the TRTEMFL field of the ADAE datasets. For the Phase 3 studies, adverse events were classified with version 20.1 of the Medical Dictionary for Regulatory Activities (MedDRA). The ADAE datasets include both the verbatim terms coded by the investigators and the preferred terms (AEDECOD) to which these verbatim terms were coded. Adverse events that resulted in death, were life threatening, required hospitalization (or prolongation of hospitalization), resulted in disability, or caused a congenital malformation were classified as serious adverse events (SAE). The severity of AEs were graded as mild., moderate, or severe, and the relationship of AEs to the study drug (definitely related, probably related, possibly related, probably not related, and definitely not related) was assessed.

The occurrence of MS activity (either a relapse or disability progression) was not considered to be an AE unless the event met criteria for an SAE. Likewise, pregnancy was not considered to be an AE, although subjects were withdrawn from studies of DRF in the setting of pregnancy.

For the completed Phase 1 and the ongoing Phase 3 studies, SAE, deaths, TEAE (including severity), collected vital signs, and pertinent laboratory abnormalities (especially lymphocyte counts and hepatic transaminases given the safety profile of the referenced product) were

Reference ID: 4504656

reviewed.

5.3. Discussion of Individual Studies

5.3.1 Study ALK8700-001

Study Title
A Phase 1 Study to Evaluate the Safety, Tolerability, and Pharmacokinetics of Oral ALKS 8700 in Healthy Adults

Study Center
PPD Phase 1 Clinic, 7551 Metro Center Dr, Suite 200, Austin, TX, 78744 (USA)

Study Objective
The primary objective of this study was to evaluate the safety and tolerability of ALKS 8700 following oral administration in healthy adults. The secondary objectives of the study were as follows:

- To determine the PK of ALKS 8700 following a single dose of a delayed release (DR) formulation
- To determine the PK of ALKS 8700 following administration of 3 different extended release (ER) formulations
- To compare the PK of ALKS 8700 to the approved drug product Tecfidera (DMF)

Methodology
This 3-part, Phase 1 study enrolled 104 healthy volunteers who were between 18 and 55 years of age. Part 1 is a double-blind, placebo-controlled, single ascending dose (SAD) study that randomized 56 subjects, 42 of whom received one dose of 49, 105, 210, 420, 630, 840, or 980 mg of a delayed release (DR) formulation of ALKS 8700 in the fasted state. Sentinel dosing was used for the 49 mg dose cohort.

Part 2 is a placebo-controlled "2-treatment, 2-period cross-over design" in which 16 subjects were randomized 3:3:2 to receive a single-dose of 420 mg of ALKS 8700 DR followed by a single-dose of DMF 240 mg, a single-dose of DMF followed by a single dose of ALKS 8700, or 2 doses of placebo in the fasted state. To allow for adequate washout, the second dose of study medication was given 7 days after the first dose. See Figure 1.

Reference ID: 4504656

Figure 1. Applicant Figure. ALK 8700-001 Part 2 Study Schematic

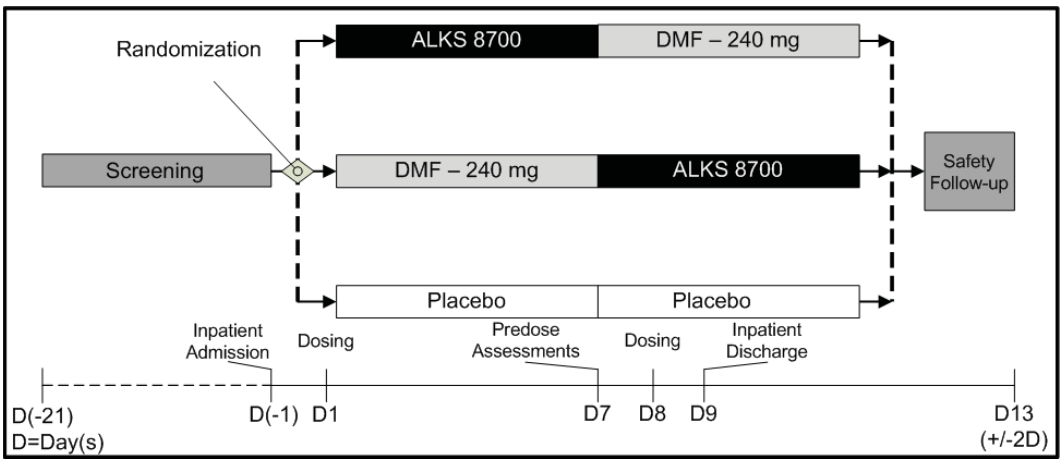

Part 3 is a "4-treatment, 4-period cross-over design" in which 32 subjects were randomized to active treatment (single doses of three different formulations of ALKS8700 840 mg extended release (ER) and one dose of DMF 240mg over 4 weeks to allow for washouts after each dose) or placebo. See Figure 2. Similar to the other parts of ALK 8700-001, subjects were required to fast overnight (at least ten hours) prior to scheduled dosing and for four hours after dosing, although ingestion of water was allowed until one hour before (and again 2 hours after) dosing.

Figure 2. Applicant Figure. ALK 8700-001 Part 3 Study Schematic

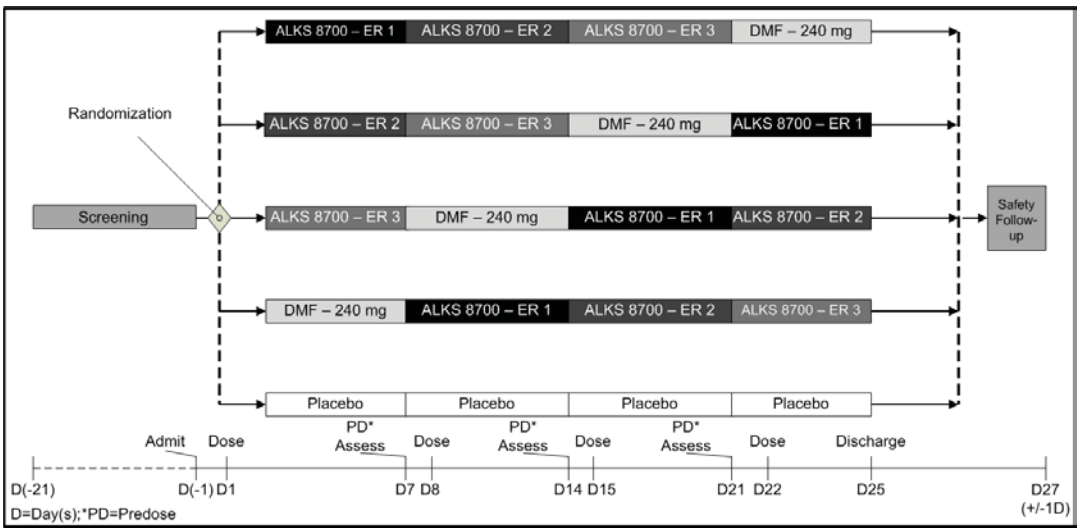

Number of Subjects (Planned and Analyzed)

A total of 104 subjects were enrolled in the study, and 102 subjects completed the study: all 56 subjects who were randomized in Part 1 completed the study, all 16 subjects who were randomized in Part 2 of the study completed the study, and 30 of the 32 subjects who were

Reference ID: 4504656

randomized in Part 3 of the study completed the study. The two subjects who did not complete Part 3 of the study had been randomized to placebo and cited "other" as the reason for study discontinuation.

Diagnosis and Main Criteria for Inclusion

All subjects enrolled in this study were judged by the investigator to be healthy volunteers who met all inclusion criteria and met no exclusion criteria. Notable inclusion criteria included a Global Flushing Severity Score (GFSS) ≤ 1 and a Gastrointestinal Symptom Rating Scale (GSRS) ≤ 1.5 at screening and admission.

Demographics

The integrated demographic characteristics for the three parts of Study ALK8700-001 are outlined in the table below. Note that subjects randomized to ALKS 8700 in Part 2 and Part 3 of Study ALK8700-001 also received a dose of DMF.

Table 3. Reviewer Table. Demographic Characteristics, ALK8700-001

Demographic Parameters	ALKS 8700 (n=78)	Placebo (n=26)
Sex		
Male	30 (38%)	8 (31%)
Female	48 (62%)	18 (69%)
Age (years)		
Mean (SD)	32.2 (9.6)	33.4 (9.9)
Min, max	18, 53	20, 50
Race		
White	49 (63%)	18 (69%)
Black or African American	22 (28%)	7 (27%)
Asian	5 (6%)	1 (4%)
Native American	2 (3%)	0
Body Mass Index		
Body Mass Index (kg/m^2) (SD)	26.3 (3.4)	26.9 (3.4)

Duration of Treatment

Screening occurred up to 21 days before randomization / dosing. The final safety follow-up visit occurred on approximately day 6 for Part 1, day 13 for Part 2, and day 27 for Part 3 of the study.

Safety Results

There were no deaths or serious adverse events (SAE) noted during Study ALK8700-001.

In Part 1 of this study, 44 treatment emergent adverse events (TEAEs) were reported by 29 subjects who were participating in this SAD study. All of the adverse events (AEs) were deemed

Reference ID: 4504656

mild in severity, except for moderate flushing in one subject who received 840mg of ALKS 8700 and moderate presyncopal symptoms in one subject who received 980mg of the study drug. The narrative for this presyncopal event suggests that this event occurred in the setting of flushing, abdominal discomfort, and nausea, that the event resolved on its own without requiring treatment, and that the subject completed the study.

Table 4. Reviewer Table. Safety Results, ALK8700-001 Part 1

Adverse Event (Preferred Term)	ALKS 8700 DR 49 mg	ALKS 8700 DR 210 mg	ALKS 8700 DR 420 mg	ALKS 8700 DR 630 mg	ALKS 8700 DR 840 mg	ALKS 8700 DR 980 mg	Placebo
Flushing	1	2	4	6	5	6	0
Diarrhea	0	0	0	1	1	2	0
Flatulence	0	0	0	0	2	1	0
Abdominal discomfort	0	1	0	0	0	1	0
Nausea	0	0	0	0	0	2	0

In Part 2 of Study ALK8700-001, subjects who were randomized to active treatment received one dose of ALKS 8700 DR 420 mg and one dose of DMF 240 mg. The doses were separated by one week. Thirty TEAEs were reported by 12 subjects in this part of the study. Except for one report of moderate flushing and another of moderate retching, all of the AEs were deemed mild in severity.

Table 5. Reviewer Table. Safety Results ALK8700-001, Part 2

Adverse Event (Preferred Term)	ALKS 8700 DR 420 mg	DMF 240 mg	Placebo
Flushing	8	8	0
Nausea	0	3	0
Constipation	1	0	0
Diarrhea	0	1	0
Eructation	0	1	0
Flatulence	0	1	0
Retching	0	1	0

In Part 3 of Study ALK8700-001, subjects who were randomized to active treatment received one dose each of 3 formulations of ALKS 8700 ER 420 mg and one dose of DMF 420 mg, for a total of 4 doses of study medication. In this part of the study, 72 TEAEs, all of which were deemed to be mild in severity, were reported by 22 subjects. Two subjects randomized to placebo dropped out of the study during Period 4 due to anemia attributed to frequent blood draws.

Reference ID: 4504656

Table 6. Reviewer Table. Safety Results, ALK8700-001 Part 3

Adverse Event (Preferred Term)	ALKS 8700 ER 1 840 mg	ALKS 8700 ER 2 840 mg	ALKS 8700 ER 3 840 mg	DMF 240 mg	Placebo
Flushing	7	4	2	15	0
Headache	2	1	1	2	1
Diarrhea	2	2	2	0	0
Dizziness	0	0	0	2	1
Gastrointestinal sounds abnormal	2	1	0	0	0
Nausea	1	1	0	1	0

Except for the aforementioned cases of anemia attributed to numerous blood draws in Part 3 of the study, a review of the vital sign and laboratory data was deemed to be unrevealing of a significant or meaningful safety signal in ALK8700-001. The Sponsor notes that there were fewer gastrointestinal TEAEs with ALKS 8700 DR than with DMF in Part 2 of the study.

Reviewer Comment: The TEAE's experienced with DRF in Study ALK 8700-001 seem consistent with what would be expected with DMF.

5.3.2 Study ALK8700-A102

Study Title
A Phase 1 Study to Determine the Effect of Food on Single Doses of ALKS 8700 and to Determine the Safety, Tolerability and Pharmacokinetics of Multiple Doses of ALKS 8700 in Healthy Volunteers

Study Center
PPD Development LP, 7551 Metro Center Dr, Suite 200, Austin, TX, 78744 (USA)

Study Objective
The primary objectives of this study were as follows:

- To compare the pharmacokinetics (PK) of ALKS 8700 and its metabolite monomethyl fumarate (MMF) following a single dose of a delayed-release (DR) formulation of ALKS 8700 in healthy adults in fed (high-fat, high-calorie meal) versus fasted conditions
- To determine the PK of ALKS 8700 and MMF following multiple doses of a DR formulation

The secondary objective was to evaluate the safety and tolerability of ALKS 8700 DR following administration of a single doses of ALKS 8700 in both fed and fasted conditions and following multiple doses.

Reference ID: 4504656

Methodology

Study ALK8700-A102 consisted of 2 parts. Part A was an open-label, 2-condition (fed versus fasting) crossover study in which one dose of ALKS 8700 DR 420 mg was administered on Days 1 and 4. Sixteen subjects were randomized in this part of the study. Part B was a randomized, double-blind, placebo-controlled, multiple ascending dose (MAD) study to assess the safety, tolerability, and pharmacokinetics of ALKS 8700 DR given twice daily for 5 days. There were three sequential treatment groups in Part B: Group 1 received 210 mg, Group 2 received 420 mg, and Group 3 received 630 mg of ALKS 8700 DR. Sixty subjects were randomized in Part B of this study, 20 to each treatment group. See Figure 3

Figure 3. Applicant Figure. Study ALK870-A102 Study Schematic

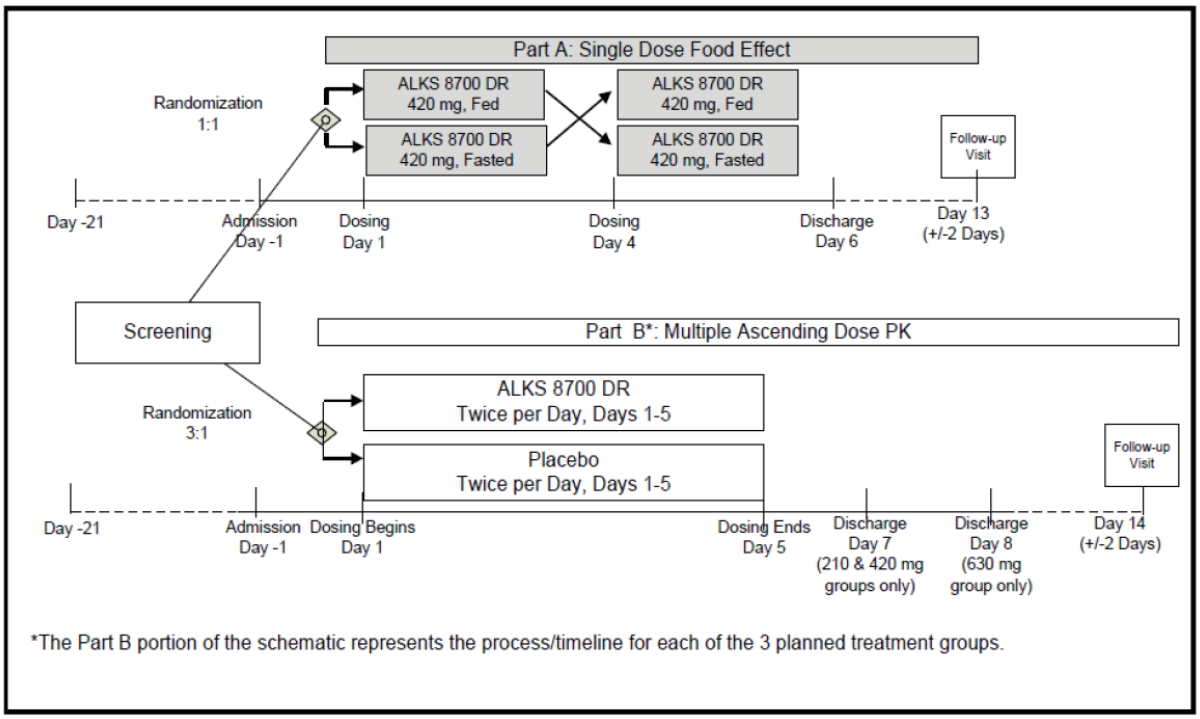

Number of Subjects (Planned and Analyzed)

All 16 subjects that were enrolled in Part A of ALK8700-A102 completed the study and were included in the safety population. Of the 60 subjects that were enrolled in Part B, all were included in the safety population, although one subject prematurely discontinued the study due to an AE (ventricular extrasystole).

Reference ID: 4504656

Diagnosis and Main Criteria for Inclusion

All subjects enrolled in this study were judged by the investigator to be healthy volunteers who met all inclusion criteria and met no exclusion criteria. A notable inclusion criterion for Part A was a Global Flushing Severity Score (GSFS) ≤ 1 at screening and admission.

Demographics

The integrated demographic characteristics for the two parts of Study ALK8700-A102 are outlined in the table below. Note that only Part B of this study had a placebo arm.

Table 7. Reviewer Table. Demographic Characteristics, ALK8700-A102

Demographic Parameters	ALKS 8700 (n=61)	Placebo (n=15)
Sex		
Male	27 (44%)	5 (33%)
Female	34 (56%)	10 (67%)
Age (years)		
Mean (SD)	33.1 (8.7)	32.7 (9.5)
Min, max	20, 53	21, 53
Race		
White	40 (66%)	8 (53%)
Black or African American	18 (30%)	7 (47%)
Other	3 (5%)	0
Body Mass Index		
Body Mass Index (kg/m^2) (SD)	26.4 (3.4)	25.2 (3.0)

Duration of Treatment

Screening occurred up to 21 days before randomization / dosing. The final safety follow-up visit occurred on approximately day 14 for both parts of Study ALK8700-A102.

Safety Results

There were no deaths or serious adverse events reported in ALK8700-A102.

In Part A, 29 AEs were reported by 12 subjects: there were 14 events of flushing and 2 events of "oropharyngeal pain." All of these events were deemed to be mild in severity.

In Part B, 32 subjects reported 67 AEs, which are delineated in Table 8 below; of note, an AE could be reported more than once by the same subject. One subject withdrew from this part of the study due to premature ventricular contractions (PVCs) but was noted to have had PVCs prior to dosing of the study medication; per the event narrative, this subject also experienced palpitations on Day 6 and dyspnea on Day 10 of the study. The ISS also includes an AE narrative

Reference ID: 4504656

describing a subject who completed the study despite waking up with a brief episode of mild chest discomfort on Day 7 of Part B of the study.

Table 8. Reviewer Table. Safety Results ALK8700-A102 Part B

Adverse Event (Preferred Term)	ALKS 8700 DR 210 mg	ALKS 8700 DR 420 mg	ALKS 8700 DR 630 mg	Placebo
Flushing	9	10	11	1
Headache	3	1	0	0
Nausea	2	1	1	0
Abdominal discomfort	2	0	0	0
Constipation	0	1	0	1
Diarrhea	0	1	0	1
Dizziness	2	0	0	0
Feeling hot	1	0	1	0
Non-cardiac chest pain	0	0	2	0
Pruritus	0	0	2	0

A review of the vital sign and laboratory data was unrevealing of a significant safety signal.

Reviewer Comment: The TEAE's experienced with DRF in Study ALK 8700-A102 seem consistent with what would be expected with DMF.

5.3.3 Study ALK8700-A103

Study Title
A Phase 1 Study to Determine the Relative Bioavailability of Monomethyl Fumarate Following Administration of ALKS 8700 and Dimethyl Fumarate in Healthy Subjects

Study Center
PPD Phase 1 Clinic, 7551 Metro Center Dr, Suite 200, Austin, TX, 78744 (USA)

Study Objective
The primary objective of this study was to compare the pharmacokinetics (PK) of monomethyl fumarate (MMF) following a single oral dose of ALKS 8700 (the delayed-release formulation of DRF) versus dimethyl fumarate (DMF) in healthy adults.

The secondary objective was to evaluate the safety and tolerability of ALKS 8700 following oral administration in healthy adults.

Reference ID: 4504656

Methodology

This was a single-center, randomized, double-blind study to evaluate the PK and safety of ALKS 8700 and DMF when administered in a standard 2-sequence, 2-treatment cross-over design. Subjects were administered either 462-mg ALKS 8700 DR or 240-mg DMF according to treatment sequence assignment. A single dose of study medication was administered on Day 1 and Day 8 of the study. The order of ALKS 8700 and DMF administration varied by sequence.

Figure 4. Applicant Figure. ALK8700-A103 Study Design

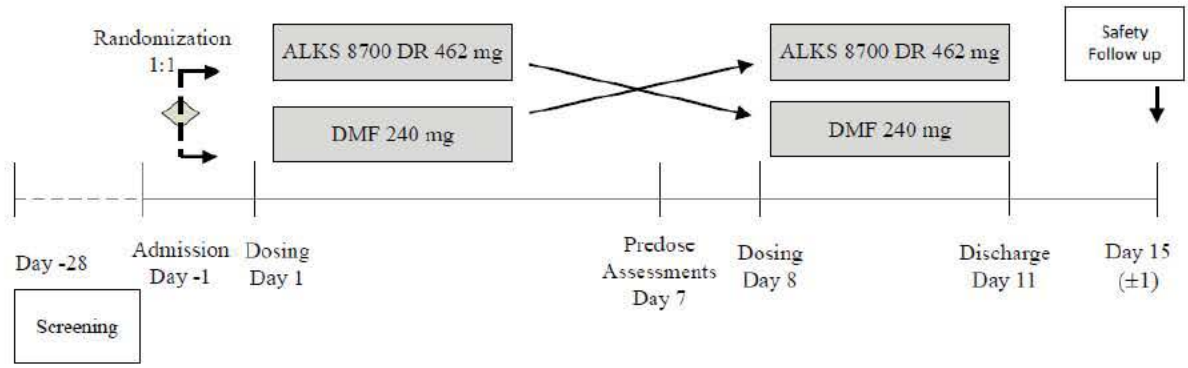

DMF=dimethyl fumarate; DR=delayed release

Number of Subjects (Planned and Analyzed)

The study planned to randomize 36 subjects. The study enrolled 35 subjects, 18 of whom received ALKS 8700 462 mg followed by DMF 240 mg, and 17 of whom received DMF 240 mg followed by ALKS 8700 462 mg. All 35 subjects completed the study and were included in the safety population and PK population.

Diagnosis and Main Criteria for Inclusion

All subjects enrolled in this study were judged by the investigator to be healthy volunteers who met all inclusion criteria and met no exclusion criteria. A notable exclusion criterion was clinically significant GI symptoms in the 30 days prior to randomization.

Demographics

The demographics of Study ALK8700-A103 are shown in the table below. Note that there was not a placebo arm in this study.

Table 9. Reviewer Table. Demographic Characteristics, ALK8700-A103

Demographic Parameters	ALKS 8700 462 mg and DMF 240mg (n=35)
Sex	
Male	10 (29%)
Female	25 (71%)

Reference ID: 4504656

Demographic Parameters	ALKS 8700 462 mg and DMF 240mg (n=35)
Age (years)	
Mean (SD)	34.0 (7.7)
Min, max	19, 50
Race	
White	23 (66%)
Black or African American	12 (34%)
Body Mass Index	
Body Mass Index (kg/m^2) (SD)	27.5 (2.7)

Duration of Treatment

The duration of ALK8700-A103 was up to 44 days, including up to 28 days of screening, an inpatient stay from Day -1 to Day 11, and a follow-up visit on Day 15.

Safety Results

There were no deaths or serious adverse events (SAE) noted during Study ALK8700-A103.

There were 59 TEAEs experienced by 24 subjects in ALK8700-A103. Except for one subject who experienced three TEAEs of moderate severity after receiving DMF, the other TEAEs in Study ALK8700-A103 were classified as mild. The TEAEs of moderate severity in that subject were flushing, postural dizziness, and vasovagal syncope; however, it appears that the vasovagal syncope was miscoded as presyncope in the ADAE dataset for this study. Another subject developed presyncope that was considered to be mild in severity after receiving DRF. Both of these subjects completed the study.

Table 10. Reviewer Table, Safety Results ALK8700-A103

Adverse Event (Preferred Term)	ALKS 8700 DR 462 mg	DMF 240 mg
Flushing	14	18
Dizziness	3	1
Nausea	1	2
Abdominal distension	1	1
Abdominal pain	1	1
Constipation	2	0
Diarrhea	0	2

Other than a significant creatine kinase (CK) elevation in subject (b) (6) (1931 U/L) attributed to exertion (changing a flat tire), review of the vital sign and laboratory data was otherwise deemed to be unrevealing of a significant safety signal.

Reference ID: 4504656

Reviewer Comment: The TEAE's experienced with DRF in Study ALK 8700-A103 seem consistent with what would be expected with DMF.

5.3.4 Study ALK8700-A104

Study Title: A Phase 1 Study To Assess The Comparative Bioavailability of Monomethyl Fumarate Following Administration of ALKS 8700 and Dimethyl Fumarate in Healthy Subjects Under Fed Conditions

Study Center
PPD Inc., 7551 Metro Center Dr, Suite 200, Austin, TX, 78744 (USA)

Study Objective
The primary objective of this study was to evaluate the comparative bioavailability of MMF following a single oral dose of ALKS 8700 versus DMF in healthy adults in fed conditions.

The secondary objective of this study was to evaluate the safety and tolerability of ALKS 8700 following single oral administration in fed conditions.

Methodology
This was a single-center, randomized, balanced, crossover design, double-blind study to evaluate the comparative bioavailability of 462 mg ALKS 8700 to 240 mg DMF in fed conditions when administered in a standard 2-sequence, 2-treatment cross-over design. A single dose of study drug was administered on Day 1 and Day 3.

Figure 5. Applicant Figure. ALK8700-A104 Study Design

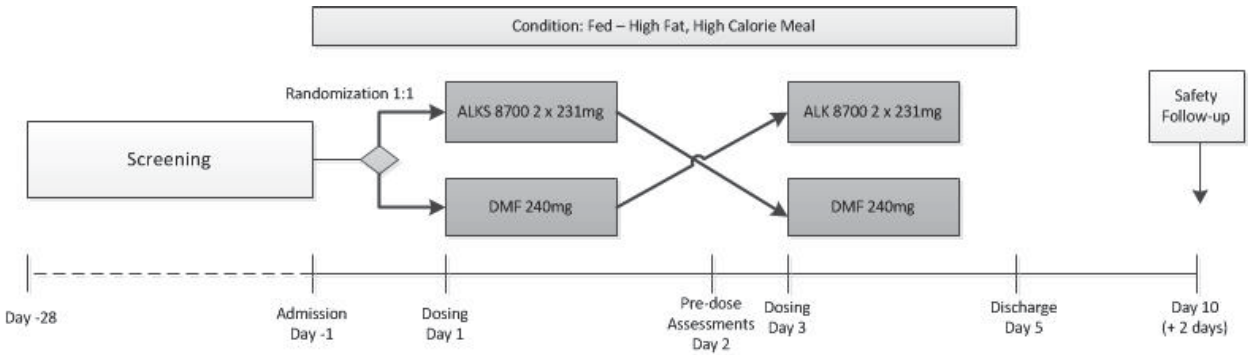

Number of Subjects (Planned and Analyzed)
A total of 42 subjects were randomized in the study; 21 subjects received ALKS 8700 462 mg followed by DMF 240 mg in sequence 1 and 21 subjects received DMF 240 mg followed by ALKS

Reference ID: 4504656

8700 462 mg in sequence 2. All 42 subjects completed the study and were included in both the safety population and the PK population.

Diagnosis and Main Criteria for Inclusion

All subjects enrolled in this study were between 18 and 55 years of age (inclusive) with body-mass-index ≥18.0 and ≤32.0 kg/m^2 and were judged by the investigator to be healthy volunteers who met all inclusion criteria and met no exclusion criteria.

Demographics

The demographics of Study ALK8700-A104 are shown in Table 11 below.

Table 11., Reviewer Table. Demographic Characteristics, ALK8700-A104

Demographic Parameters	ALKS 8700 462 mg and DMF 240mg (n=42)
Sex	
Male	27 (64%)
Female	15 (36%)
Age (years)	
Mean (SD)	35.9 (9.3)
Min, max	21, 51
Race	
White	30 (71%)
Black or African American	11 (26%)
Asian	1 (2%)
Body Mass Index	
Body Mass Index (kg/m^2) (SD)	26.3 (3.2)

Duration of Treatment

The duration of ALK8700-A104 was up to 38 days, including up to 28 days of screening, an inpatient stay from Day -1 to Day 5, and a follow-up visit on approximately Day 10.

Safety Results

There were no deaths or serious adverse events (SAE) noted during Study ALK8700-A104. There were 35 TEAE experienced by 19 subjects in the study. All of the TEAE were classified as being mild in severity.

Table 12. Reviewer Table, Safety Results ALK8700-A104

Adverse Event (Preferred Term)	ALKS 8700 DR 462 mg	DMF 240 mg
Flushing	10	13
Headache	3	1

Reference ID: 4504656

Subject (b) (6) in the ALKS 8700 treatment group experienced a TEAE of muscle enzyme increased (16,605 U/L), and this subject's aspartate aminotransferase was over 3 times the upper limit of normal (ULN) at 228 U/L; this event was not felt to be related to the study drug as the subject reportedly had a recent history of strenuous muscular activity. A TEAE of ventricular extrasystoles in Subject (b) (6) in the ALKS 8700 treatment group was attributed to a previously undiagnosed pre-existing condition. Review of the vital sign and laboratory data was otherwise deemed to be unrevealing of a concerning safety signal.

Reviewer Comment: The TEAE's experienced with DRF in Study ALK 8700-A104 seem consistent with what would be expected with DMF. The lack of GI TEAE's suggests that taking ALK8700 with food may mitigate this side effect, as has been observed with DMF.

5.3.5 Study ALK8700-A105

Study Title
A Single-Center, Open-Label, Fixed-Sequence, 2-Period Study to Evaluate the Absorption, Metabolism, and Excretion of Single Doses of Unlabeled ALKS 8700 With and Without Promoiety-Labeled [^{14}C]-ALKS 8700 in Healthy Male Subjects

Study Center
PPD Inc., 7551 Metro Center Dr, Suite 200, Austin, TX, 78744 (USA)

Study Objective
The primary objectives of the study were

- To investigate the PK of ALKS 8700 and its metabolites following a single oral administration of ALKS 8700 with and without promoiety-labeled [^{14}C]-ALKS 8700 to healthy male subjects.
- To evaluate the absorption, metabolism, and excretion of promoiety-labeled [^{14}C]-ALKS 8700 administered as a single 462-mg oral dose (containing approximately 100 µCi of [^{14}C]-ALKS 8700) to healthy male subjects.

The secondary objective of the study was

- To assess safety and tolerability of ALKS 8700 in healthy male subjects.

Methodology
ALK8700-105 was a Phase 1, single-center, open-label, fixed-sequence, 2-period study of DRF in healthy males. In Period 1, subjects were administered a single dose of unlabeled ALKS 8700 462mg; one week later (Period 2), subjects were administered a single dose of ^{14}C-labelled ALKS 8700.

Reference ID: 4504656

Figure 6. Applicant Figure. ALK8700-A015 Study Design

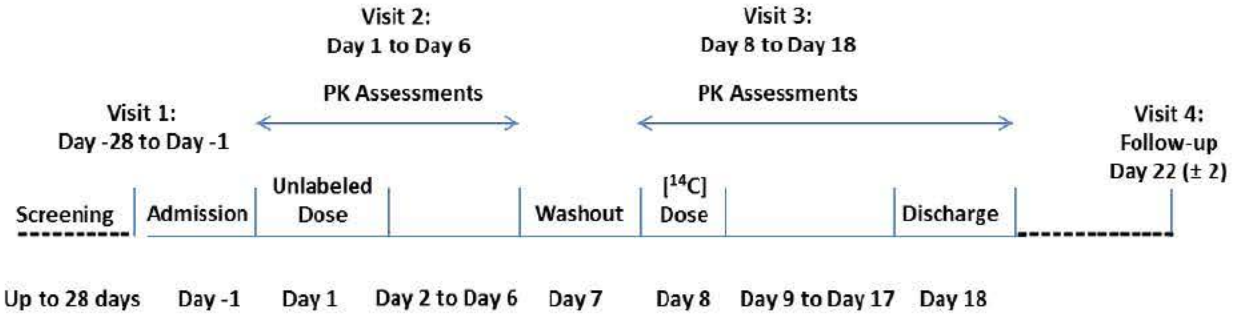

Number of Subjects (Planned and Analyzed)

Ten subjects were enrolled in ALK8700-A105, and all 10 subjects completed the study and were included in the safety and PK analysis.

Diagnosis and Main Criteria for Inclusion

All subjects enrolled in this study were between 18 and 55 years of age (inclusive) with body-mass-index ≥18.0 and ≤32.0 kg/m^2 and were judged by the investigator to be healthy volunteers who met all of the inclusion criteria but none of the exclusion criteria.

Demographics

All 10 subjects in ALK8700-A105 were male. The mean age of the study population was 31.2 (standard deviation 7.9) years. Six of the subjects were black, and 4 were white. The mean body mass index of the group was 26.6 ± 3.6 kg/m^2.

Duration of Treatment

The study consisted of a screening period (Days –28 through –2), admission (Day –1), a treatment period (Days 1 through 18), and an outpatient follow-up assessment (Day 22 ± 2 days).

Safety Results

There were no deaths or serious adverse events (SAE) noted during Study ALK8700-A105. Nineteen TEAEs were reported by 8 subjects, and all were classified as mild in severity.

Table 13. Reviewer Table, Safety Results ALK8700-A105

Adverse Event (Preferred Term)	ALKS 8700 DR 462 mg
Flushing	10
Abdominal discomfort	2
Abdominal pain	2
Constipation	2

Reference ID: 4504656

Adverse Event (Preferred Term)	ALKS 8700 DR 462 mg
Nasopharyngitis	2

Review of the vital sign and laboratory data was unrevealing of a concerning safety signal.

Reviewer Comment: The TEAE's experienced with ALKS 8700 in Study ALK 8700-A105 seem consistent with what would be expected with DMF.

5.3.6 Study ALK8700-A106

Study Title
A Phase 1 Study to Determine the Influence of Co-Ingestion of Alcohol on the Pharmacokinetics of ALKS 8700 in Healthy Subjects

Study Center
INC Research Toronto, Inc., Toronto, Ontario, Canada

Study Objective
The primary objective of ALK8700-A106 was to determine the influence of coingestion of alcohol on the PK of ALKS 8700 in healthy adults. The secondary objectives were to evaluate the safety and tolerability of ALKS 8700 in the presence and absence of alcohol in healthy adults.

Methodology
Eligible healthy subjects who consumed an average of 7-21 drinks per week were admitted to administer an alcohol tolerability test in which they were given ~240mL of 40% ethanol (i.e., vodka) to be ingested over 10 minutes on an empty stomach. Subjects who tolerated this test without significant adverse events were eligible to continue in the study, an open-label, three-period, six-sequence, crossover study. During each period (on Days 1, 8, and 15) of the study, "a single oral dose of ALKS 8700 462 mg (two capsules of 231 mg) was administered at approximately the same time each morning with 240 mL (8 fluid ounces) of either distilled water, 5% v/v ethanol–distilled water solution, or 40% v/v ethanol solution." Pre- and post-dose samples were collected for PK analyses.

Reference ID: 4504656

Figure 7. Applicant Figure. ALK8700-A106 Study Design

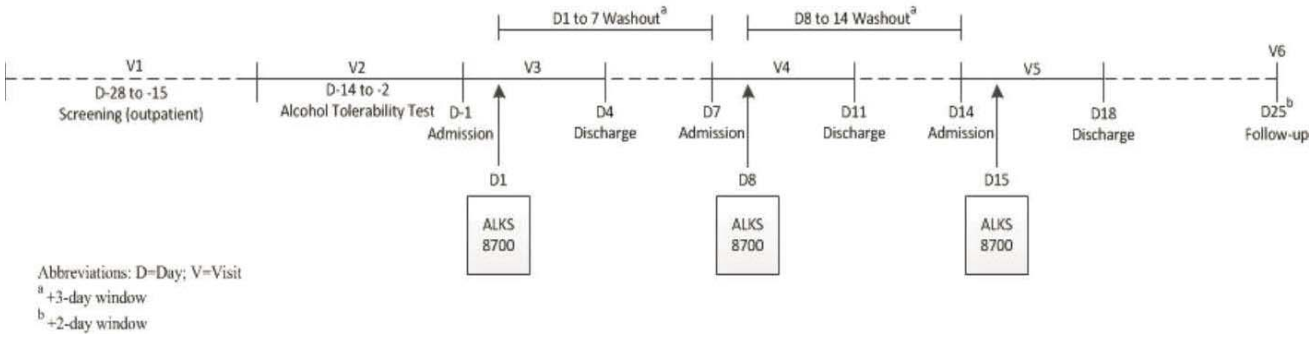

Number of Subjects (Planned and Analyzed)
Per the CSR, "42 subjects entered the alcohol tolerability test of the study, which represents 52.5% of the total number of subjects screened. Of these 42 subjects, 35 passed the test, six failed, and one withdrew consent. Of the 35 subjects who passed the alcohol tolerability test, two withdrew consent and two became ineligible; therefore, 31 subjects were randomized to treatment."

"Of the 31 subjects who received at least one dose of study drug, 30 (96.8%) completed the study (i.e., completed the three treatment periods and the follow-up visit). One subject (3.2%) discontinued early from Treatment Period 2 due to the occurrence of AEs."

Diagnosis and Main Criteria for Inclusion
All subjects enrolled in this study were between 18 and 55 years of age (inclusive) with body-mass-index ≥22.0 and ≤32.0 kg/m^2 , consumed an average of 7-21 alcoholic drinks per week (including five or more drinks on one occasion in last 30 days), and were judged by the investigator to be otherwise healthy volunteers who met all inclusion criteria and met no exclusion criteria.

Demographics
The average age of the subjects in ALK8700-A106 was 42.4 ± 9.4 years, and 81% of the subjects were male. Nineteen (62%) of the 31 subjects were white, ten (32%) were black, and one was Asian. The average BMI of the subjects was 26.2 ± 2.6 kg/m^2.

Duration of Treatment
Per the CSR, the "study duration was approximately 7 to 8 weeks, which included a Screening period (up to 4 weeks), three inpatient Treatment periods, each separated by a 7-day washout period (+3 days), and a Follow-up visit (approximately 7 days [+2 days] after discharge from Period 3). The 7-day washout between doses started the day of dosing (on Days 1 and 8) during the inpatient stay and continued after discharge from the inpatient facility between periods."

Reference ID: 4504656

Safety Results

There were no deaths or serious adverse events (SAE) noted during Study ALK8700-A106. One subject was withdrawn from the study due to an TEAE (serum creatine phosphokinase [9354 U/L] and creatinine elevation [138umol/L]) that was not deemed to be related to the study drug since it reportedly followed an increase in physical activity. There were 184 TEAEs reported by 29 subjects. All of the TEAE were classified as mild in severity except for one event of dizziness that was classified as moderate in severity. The table below delineates TEAE that were reported more than twice, although many of these appear to be at least potentially attributable to the coadministration of alcohol.

Table 14. Reviewer Table, Safety Results ALK8700-A106.

Adverse Event (Preferred Term)	ALKS 8700 DR 462 mg
Flushing	34
Feeling hot	24
Pruritus	17
Poisoning (Intoxication)	14
Dizziness	13
Paresthesia	9
Headache	8
Nausea	6
Myalgia	4
Somnolence	4
Burning sensation	3
Hyperhidrosis	3

5.3.7 Study ALK8700-A107

Study Title

A Phase 1 Study to Investigate the Effect of ALKS 8700 on the Pharmacokinetics of Digoxin in Healthy Subjects

Study Center

PPD Development LP, 7551 Metro Center Dr, Suite 200, Austin, TX, 78744 (USA)

Study Objective

The primary objective of this study was to determine the effect of ALKS 8700 on the pharmacokinetics (PK) of digoxin in healthy adults. The secondary objectives were to evaluate the PK of ALKS 8700 in healthy adults and to evaluate the safety and tolerability of ALKS 8700 and digoxin in healthy adults.

Reference ID: 4504656

Methodology

ALK8700-A107 was a Phase 1, single-center, open label study. After admission on Study Day -1, subjects received a dose of digoxin 0.25mg followed by a 10-day washout (Period 1). On the morning of Study Day 11, subjects received a dose of ALKS 8700 462mg followed by digoxin 0.25mg. Subjects also received ALKS 8700 on the evening of Study Day 11 and twice daily for Study Days 12-15 (Period 2). Blood samples were collected throughout the study for digoxin and ALKS 8700 PK analyses.

Figure 8. Applicant Figure. ALK8700-A107 Study Design

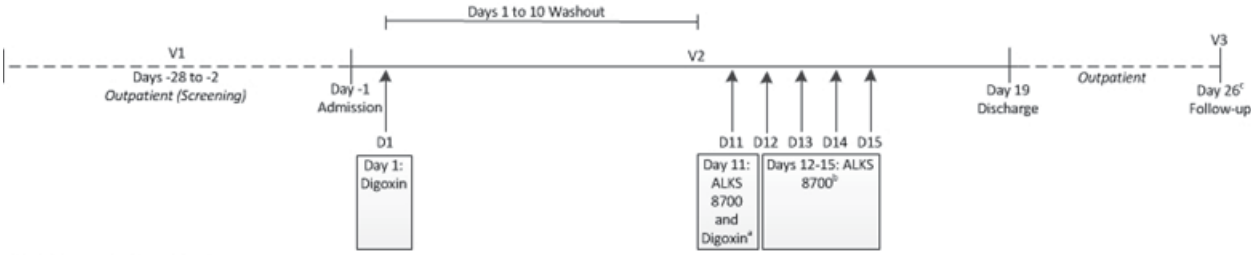

Abbreviations: D=Day; V=Visit
[a] Dosing on Day 11: ALKS 8700 will be administered in the morning, and approximately 30 minutes after digoxin will be administered. The second dose of ALKS 8700 will be administered in the evening
[b] Dosing on Days 12-15: ALKS 8700 will be administered twice daily
[c] +2 day window

Number of Subjects (Planned and Analyzed)

ALK8700-A107 enrolled 24 healthy adult subjects as planned. Twenty-three subjects completed the study, because one subject discontinued the study due to a toothache.

Diagnosis and Main Criteria for Inclusion

All subjects enrolled in this study were between 18 and 55 years of age (inclusive) with body-mass-index ≥18.0 and ≤32.0 kg/m^2 and were judged by the investigator to be healthy volunteers who met all inclusion criteria and met no exclusion criteria.

Demographics

The average age of the subjects in ALK8700-A107 was 32.4 ± 8.7 years, and 50% of the subjects were male. Nineteen (62%) of the 31 subjects were white, ten (32%) were black, one was Asian, and one was from the Pacific Islands. The average BMI of the subjects was 28.4 ± 3.0 kg/m^2.

Duration of Treatment

Per the CSR, "The study duration for a given subject was approximately 8 weeks, which included an up to 4-week Screening period, a 20-day inpatient treatment period, and a Follow-up visit (approximately 7 days after discharge)."

Reference ID: 4504656

Safety Results

There were no deaths or serious adverse events (SAE) noted during Study ALK8700-A107. One subject discontinued from the study due to an TEAE (toothache) that was most likely not related to the study drug. The table below delineates TEAE that occurred more than once in ALKS 8700-A107.

Table 15. Reviewer Table, Safety Results ALK8700-A107.

Adverse Event (Preferred Term)	ALKS 8700 DR 462 mg
Flushing	16
Dermatitis contact	5
Headache	3
Abdominal discomfort	2
Abdominal pain	2
Diarrhea	2
Micturition urgency	2
Myalgia	2

A review of the vital sign and laboratory data of ALK8700-A107 was unrevealing of a significant safety signal.

Reviewer Comment: The TEAE's experienced with ALKS 8700 in Study ALK 8700-A107 seem consistent with what would be expected with DMF.

5.3.8 Study ALK8700-A108

Study Title

A Phase 1 Study of the Pharmacokinetics, Safety and Tolerability of ALKS 8700 in Subjects with Renal Impairment

Study Centers: 3 US sites managed by an independent CRO, (b) (4)

Study Objective

Per the CSR, the "The objective of this study was to compare the PK, safety, and tolerability of ALKS 8700 in subjects with mild, moderate, and severe renal impairment versus healthy control subjects following single-dose administration."

Methodology

This open-label study consists of 4 cohorts, including healthy subjects and those with mild, moderate, or severe renal impairment, in which subjects will receive a single dose of ALKS 8700 DR 462 mg. Comparative PK and safety assessments were performed.

Reference ID: 4504656

Number of Subjects (Planned and Analyzed)
Per the CSR, "Thirty-two subjects were enrolled into this study, with 8 subjects in each cohort and at least 3 subjects of either sex."

Diagnosis and Main Criteria for Inclusion
This study enrolled healthy volunteers and subjects with mild, moderate, or severe renal impairment with estimated glomerular filtration rate (eGFR) of 60-89, 30-59, or < 30 mL/min/1.73*m^2. Subjects were to be between 18 and 79 years of age with a BMI between 18.0 and 40.0 kg/m^2. Investigators were to ensure that subjects met all of the inclusion criteria and none of the exclusion criteria for the study.

Demographics
The average age of the subjects in ALK8700-A108 was 65.1 ± 8.0 years, and sixteen (50%) of the subjects were female. Twenty-five (78%) of the 32 subjects were white, six (19%) were black, and one was Native American. The average BMI of the subjects was 29.4 ± 4.1 kg/m^2.

Duration of Treatment
Per the CSR, the "study duration for a participating subject was approximately 6 weeks, including a screening period of up to 4 weeks, one 10-day in-clinic period, and a follow-up visit (approximately 7 days after discharge)."

Safety Results
There were no deaths or serious adverse events (SAE) noted during Study ALK8700-A108. No subjects discontinued the study due to an AE. Twenty-six TEAE were reported by 18 subjects – all but 4 of the TEAE were classified as mild. The moderate TEAE included one event each of flushing, headache, flatulence, and vomiting. Events that were reported more than once are shown in the table below.

Table 16. Reviewer Table, Safety Results ALK8700-A108.

Adverse Event (Preferred Term)	ALKS 8700 DR 462 mg
Flushing	11
Dermatitis contact	2
Diarrhea	2
Flatulence	2

With the obvious caveat that many of the subjects in ALK8700-A108 had chronic renal impairment, a review of the vital sign and laboratory data for this study was otherwise unrevealing of a significant safety signal.

Reference ID: 4504656

Reviewer Comment: The TEAE's experienced with DRF in Study ALK 8700-A108 seem consistent with what would be expected with DMF (or in subjects with renal impairment).

5.3.9 Study ALK8700-A109

Study Title
A Phase 1 Study to Assess the Comparative Bioavailability, Safety and Tolerability of Monomethyl Fumarate Following Administration of ALKS 8700 and Dimethyl Fumarate in Healthy Subjects When Taken with Meals of Varying Fat and Caloric Content

Study Center
PPD Inc., 7551 Metro Center Dr, Suite 200, Austin, TX, 78744 (USA)

Study Objective
Per the CSR, the "primary objective of ALK8700-A109 was to compare the PK of monomethyl fumarate (MMF) following a single dose of ALKS 8700 administered after a low fat/low calorie or medium fat/medium calorie meal relative to a single dose of dimethyl fumarate (DMF) administered fasted in healthy adults.

The secondary objectives were as follows:

- To evaluate the PK of MMF following a single dose of DMF immediately after a high fat / high calorie meal relative to a single dose of DMF administered to fasted healthy adults.
- To evaluate the safety and tolerability of ALKS 8700 and DMF with and without food in healthy adults."

Methodology
Per the CSR, ALK8700-A109 "was a Phase 1, single-center, open-label, randomized, 4-period, 4-sequence crossover study designed to evaluate the effect of fat and caloric content of an accompanying meal on the PK of MMF following a single dose of ALKS 8700 relative to a single dose of DMF administered in healthy adults in fasted condition." In each period, administration of one of the following occurred: DMF 240mg under fasted conditions, DMF 240mg with a high-fat/high calorie meal, ALKS 8700 462mg doses with a low fat/low calorie meal, or ALKS 8700 462mg dosed with a medium fat/medium calorie meal.

Reference ID: 4504656

Figure 9. Applicant Figure. ALKS8700-A109 Study Design

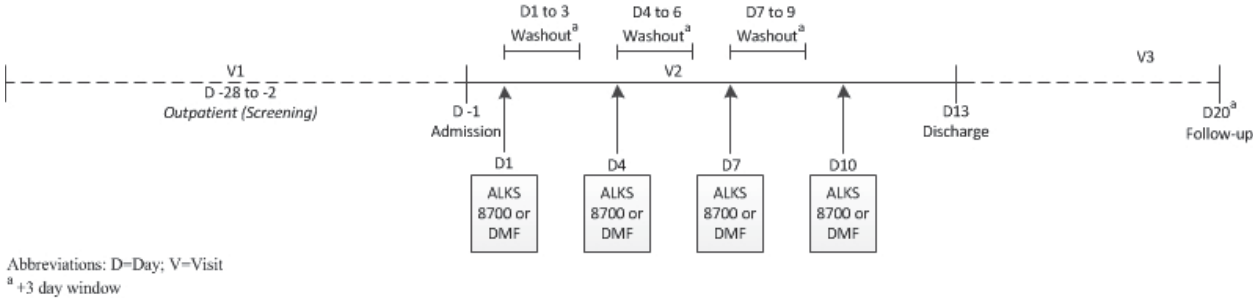

Number of Subjects (Planned and Analyzed)
Forty-eight (48) healthy adult subjects were randomized in ALK8700-A109. Two subjects dropped out of the study, one due to a TEAE (papular rash) and the other due to a "family emergency." All 48 subjects contributed data to the PK and safety analyses.

Diagnosis and Main Criteria for Inclusion
All subjects enrolled in this study were between 18 and 55 years of age (inclusive) with body-mass-index ≥18.0 and ≤32.0 kg/m^2 and were judged by the investigator to be healthy volunteers who met all inclusion criteria and met no exclusion criteria.

Demographics
The average age of the subjects in ALK8700-A109 was 34.0 ± 9.9 years. Twenty-six of the 48 (54%) subjects were female and 22 were male (46%). Thirty-one (65%) of the subjects were white, and seventeen (35%) were black. The average BMI of the subjects was 27.7 ± 2.7 kg/m^2.

Duration of Treatment
Per the CSR, the "study duration was approximately 7 weeks, which included a Screening period (up to 4 weeks), one 2-week Inpatient period, and a Follow-up visit approximately 7 days after discharge."

Safety Results
No deaths or SAEs occurred in ALK8700-A109. As above, one subject discontinued the study due to a papular rash. One subject experienced transaminase and gamma-glutamyltransferse (GGT) elevations that were coded as a TEAE; the events resolved and improved (respectively) over time. Two subjects had temporary CK elevations that were attributed to "vigorous" exercise.

There were 100 TEAE, all of which were classified as mild, reported by 33 subjects. The table below lists TEAEs that were reported by 2 or more subjects.

Reference ID: 4504656

Table 17. Reviewer Table. ALKS8700-A109 Treatment Emergent Adverse Events

Adverse Event (Preferred Term)	ALKS 8700 462 mg (low fat/calorie)	ALKS 8700 462 mg (medium fat / calorie)	DMF 240mg (fasted)	DMF 240 mg (high fat / calorie)
Flushing	16	19	23	9
Headache	1	2	6	2
Dizziness	0	0	3	0
Abdominal discomfort	0	0	2	0
Nausea	0	1	1	0
Maculo-papular rash	0	0	1	1

Except for the two subjects with CPK elevation and the one subject with transaminase elevation noted above, a review of the laboratory data for this study was unrevealing of a concerning safety signal. Assuming that the one value of '11' for systolic blood pressure is a data entry error, review of the vital sign data for this study was also unrevealing of a significant safety signal.

Reviewer Comment: The TEAE's experienced with DRF in Study ALK 8700-A109 seem consistent with what would be expected with DMF.

5.3.10 Study ALK8700-A110

Study Title
A Phase 1 Study to Evaluate the Effect of Multiple Doses of ALKS 8700 on the QTc Interval in Healthy Volunteers

Study Center
1 site (Vince & Associates Clinical Research, Inc) managed by an independent CRO, (b) (4)

Study Objective
Primary: "To evaluate the effects of multiple doses of therapeutic and supratherapeutic oral dose strengths of ALKS 8700 on the heart rate-corrected QT interval using Fridericia's formula (QTcF)"

Secondary:

- "To evaluate the effect of ALKS 8700 on other electrocardiogram (ECG) parameters: heart rate (HR), PR and QRS intervals, and T-wave morphology and U-wave presence

Reference ID: 4504656

- To demonstrate sensitivity of the study to detect a small QT effect using moxifloxacin as a positive control
- To evaluate the safety and tolerability of ALKS 8700
- To evaluate the pharmacokinetic/pharmacodynamic (PK/PD) relationship between plasma concentrations of the metabolites MMF and RDC 6567 and ECG parameters"

Methodology

Per the CSR synopsis, "this was a single-center, Phase 1, randomized, double-blind study with ALKS 8700 in healthy male and female subjects, which was conducted as a placebo- and positive- (moxifloxacin) controlled, multiple-dose, parallel group study with a 'nested crossover' design for the moxifloxacin/placebo comparison."

Figure 10. Applicant Figure. ALK8700-A110 Study Design.

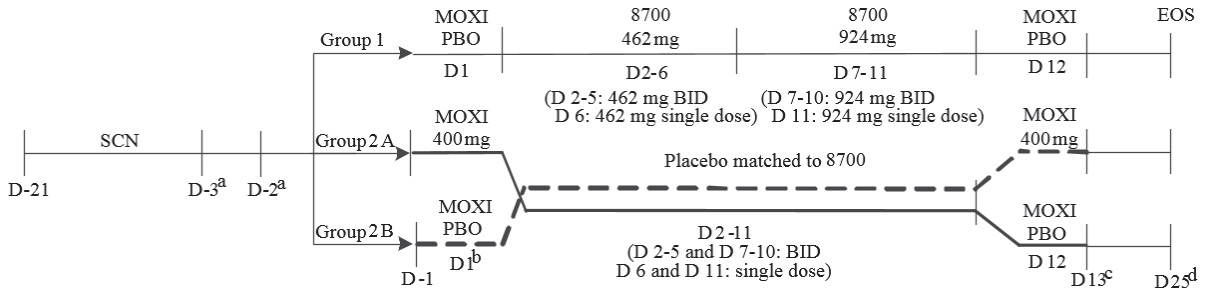

Number of Subjects (Planned and Analyzed)

ALK8700-A110 planned to enroll 64 subjects, including at least 21 women. The study enrolled 65 subjects, 53 of whom completed treatment and 52 of whom completed the study. Data from all subjects contributed to the safety analysis, but four subjects were excluded from the PK analysis.

Diagnosis and Main Criteria for Inclusion

All subjects enrolled in this study were nonsmokers between 18 and 45 years of age (inclusive) with body-mass-index ≥18.0 and ≤30.0 kg/m^2 and were judged by the investigator to be healthy volunteers who met all inclusion criteria (including the absence of any ECG abnormalities) and met no exclusion criteria.

Demographics

The demographic characteristics of the subjects in Study ALK8700-A110 follow in the table below.

Reference ID: 4504656

Table 18. Reviewer Table. Demographic Characteristics, ALK8700-A110

Demographic Parameters	ALKS 8700 (n=31)	Placebo (n=34)
Sex		
Male	20 (65%)	18 (53%)
Female	11 (35%)	16 (47%)
Age (years)		
Mean (SD)	31.4 (7.1)	31.0 (6.3)
Min, max	19,45	18,43
Race		
White	10 (32%)	7 (21%)
Black or African American	21 (68%)	25 (74%)
Other	0	2 (6%)
Body Mass Index		
Body Mass Index (kg/m^2) (SD)	25.5 (3.2)	25.0 (3.2)

Duration of Treatment

Per the CSR synopsis, "the Study duration was approximately 8 weeks, including 28 days for Screening, 15 days Inpatient, and 12 (±2) days for Safety follow-up (End of Study)."

Safety Results

No deaths or SAEs occurred in ALK8700-A110, but one subject withdrew from the study after experiencing a TEAE (hypersensitivity reaction) to ALKS 8700. Eighty-four TEAE were reported by 30 subjects; 72 (86%) of the TEAE were classified as mild in severity, and 12 (14%) were deemed moderate in severity. All but one of the TEAE of moderate severity were deemed to be probably or definitely not related to the study drug; the TEAE of moderate severity that was deemed to be possibly related to the study medication was a headache. TEAEs that occurred in 2 or more individuals are shown in Table 19 below. Review of the vitals (one subject with significant tachycardia) and laboratories (including one subject with aminotransferase elevation ≥ three times the upper limit of normal, another with an elevation in serum creatinine, and two subjects with CPK elevations) were without a clear pattern of abnormalities.

Table 19. Reviewer Table. ALKS8700-A110 Treatment Emergent Adverse Events

Adverse Event (Preferred Term)	ALKS 8700 DR (n=31)	Placebo (n=34)
Flushing	13	1
Dermatitis contact	4	3
Headache	2	4
Constipation	3	1
Diarrhea	4	0

Reference ID: 4504656

Adverse Event (Preferred Term)	ALKS 8700 DR (n=31)	Placebo (n=34)
Nausea	3	1
Alanine aminotransferase increased	2	1
Aspartate aminotransferase increased	2	1
Pruritus	3	0
Blood creatine phosphokinase increased	1	1
Dizziness	1	1
Hypersensitivity	2	0
Neutrophil count decreased	2	0
Oropharyngeal pain	1	1
Upper respiratory tract infection	1	1
White blood cell count decreased	2	0

Reviewer Comment: Although these Phase 1 studies are relatively small studies of short duration, the safety of diroximel fumarate appears similar to that of the referenced product (Tecfidera), with flushing and GI symptoms being the most commonly reported AEs. In the figure below, this reviewer attempts to integrate the AEs potentially attributable to diroximel fumarate from these ten Phase 1 studies. Of note, an AE could have been reported more than once by a subject, so percentages are not given in the table below. The high number of AEs in Study A106 likely relates to the co-administration of a large volume of alcohol.

Reference ID: 4504656

Figure 11. Reviewer Table. Phase 1 AEs Potentially Attributable to Diroximel Fumarate

	001.1 n=42	001.2 n=16	001.3 n=32	A102B n=61	A103 N=35	A104 N=42	A105 N=10	A106 N=31	A107 N=24	A108 n=32	A109 N=48	A110 N=31
Flushing	24	8	13	30	14	10	10	34	16	11	35	13
Diarrhea	4		6	1					2	2		4
Nausea	2		2	4	1			6			1	3
Flatulence	3									2		
Constipation		1		1	2		2					3
Abd Pain	2			2	1		4		4		2	
Headache			4	4		3		8	3		3	2
Dizziness				2	3			13			3	1
Pruritis				2				17				3
Nasopharyngitis							2					
Feeling hot				1				24				
Poisoning								14				
Paresthesia								9				
Contact Dermatitis									5	2		4
ALT increase												2

5.3.11 Study ALK8700-A301

Study Title
A Phase 3 Open Label Study to Evaluate the Long-term Safety and Tolerability of ALKS 8700 in Adults with Relapsing Remitting Multiple Sclerosis

Study Centers
103 sites (61 in United States, 9 in Poland, 9 in Ukraine, 5 in Bulgaria, 5 in Germany, 5 in Serbia, 3 in Belgium, 2 in Canada, Russia, and Spain), managed by an independent CRO, (b) (4)

Study Objective
As per the iCSR for ALK8700-A301, the study objectives were as follows:

1) "To evaluate the long-term safety and tolerability of ALKS 8700 for up to 96 weeks of treatment in adult subjects with RRMS
2) To evaluate treatment effect over time in adult subjects with RRMS treated with ALKS 8700"

Methodology
ALK8700-A301 is a multi-center, open-label, single-armed study in which subjects with relapsing MS receive up to 96 weeks of diroximel fumarate. Most subjects enrolling in this study were de novo, although some rolled over from the 5-week ALK8700-A302 study comparing the GI

Reference ID: 4504656

tolerability of ALKS 8700 and DMF. De novo subjects received one capsule of DRF 231 mg twice daily for one week, after which they took 2 DRF capsules (432 mg total) twice daily for the remainder of the study. Rollover subjects started with DRF 462 mg twice daily. Subjects were allowed to take the capsules with or without food but were instructed to avoid taking the study drug with a high-fat, high-calorie meal, because the MMF C_{max} after taking DRF was 26% lower than that after taking DMF in this state.

Figure 12. Applicant Figure. ALK8700-A301 Study Design

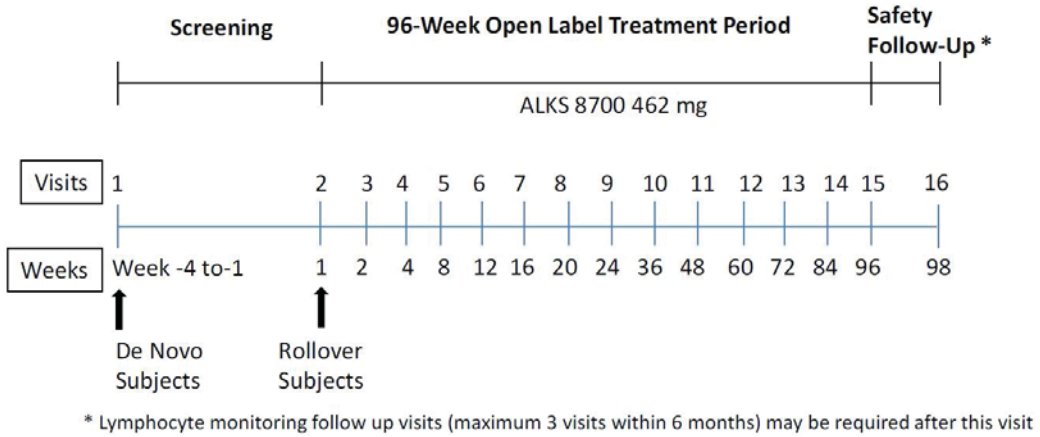

All sexually-active subjects agreed to the use of 2 methods of contraception for the duration of the study and for 30 days after the final dose of study drug, although women with a documented history of hysterectomy, bilateral tubal ligation, or bilateral salpingo-oophorectomy, post-menopausal women, and men with a history of a vasectomy (and confirmed azoospermia) were exempt from this requirement.

Number of Subjects (Planned and Analyzed)

This study is on-going. As of the cutoff-date for the interim CSR (30Mar2018), 696 subjects had been enrolled in the study. The subsequently-submitted 120-day safety update reports that 888 subjects had been enrolled in the study as of 30Nov2018, but further data is not available on these additional subjects.

Inclusion Criteria

The inclusion criteria for ALK8700-A301, separated by de novo subjects and those rolling over from ALK8700-A302, are delineated below.

For De Novo subjects:

1) "Was willing and able to provide informed consent
2) Was capable of understanding and complying with the protocol

Reference ID: 4504656

3) Agreed to use an acceptable method of contraception for the duration of the study and for 30 days after any study drug administration or was surgically sterile or post-menopausal
4) Was a male or female adult aged 18 to 65 years, inclusive, at screening
5) Had a confirmed diagnosis of RRMS according to the revised 2010 McDonald Criteria
6) Had EDSS score of 0.0 to 6.0 at screening and Visit 2
7) Was neurologically stable with no evidence of relapse within 30 days prior to Visit 2"

For Rollover subjects:

1) "Was willing and able to provide informed consent
2) Was capable of understanding and complying with the protocol
3) Agreed to use an acceptable method of contraception for the duration of the study and for 30 days after any study drug administration or was surgically sterile or post-menopausal
4) Completed the full Treatment Period of any eligible study of ALKS 8700 within 7 days of Visit 2"

Exclusion Criteria

The inclusion criteria for ALK8700-A301, separated by de novo subjects and those rolling over from ALK8700-A302, are delineated below.

For De Novo subjects:

1) "Had any finding that in the view of the Investigator or the Medical Monitor would compromise the safety of the subject or affect their ability to adhere to the protocol visit schedule or fulfill visit requirements, or made the subject unsuitable for participation in the study (including overall clinical assessment)
2) Had been diagnosed with primary progressive, secondary progressive, or progressive relapsing MS as defined by Lublin and Reingold (1996)
3) Had a history of clinically significant cardiovascular, pulmonary, GI (e.g., inflammatory bowel disease and peptic ulcer disease), dermatologic, psychiatric, neurologic (other than MS), endocrine, renal, and/or other major disease that would preclude participation in a clinical study
4) Had a history of clinically significant recurring or active GI symptoms (e.g., nausea, diarrhea, dyspepsia, and/or constipation) within 3 months of screening, including symptoms that required the initiation of symptomatic medical treatment (e.g., initiation of a medication to treat gastroesophageal reflux disease) or a change in symptomatic medical treatment (e.g., an increase in dose) within 3 months of screening
5) Had a history of malignancy, unless an exception was granted by the Medical Monitor (e.g., subjects with basal cell carcinoma that had been completely excised prior to study entry remained eligible)
6) Had a clinically significant medical condition or observed abnormality at screening (e.g., clinically significant physical examination finding, vital sign result, electrocardiogram [ECG] result, or laboratory test result)

Reference ID: 4504656

7) Had a history of a myocardial infarction, including a silent myocardial infarction identified on ECG, or unstable angina
8) Had a history of clinically significant drug or alcohol abuse within the past year (per Investigator judgment)
9) Had a positive serology test for hepatitis B surface antigen, hepatitis C antibody, or human immunodeficiency virus antibody at screening
10) Had any of the following abnormal blood tests at screening:
    - Alanine aminotransferase (ALT) or aspartate aminotransferase (AST) ≥2× the upper limit of normal (ULN)
    - Thyroid-stimulating hormone level >10% of the ULN at screening
    - Estimated glomerular filtration rate (eGFR) ≤60 mL/min/1.73 m2 (using the Chronic Kidney Disease Epidemiology Collaboration equation)
    - Lymphocyte count <0.9 × 109/L
11) Had any of the following abnormal urine tests at screening:
    - Beta-2 microglobulin >0.3 µg/mL
    - Albumin to creatinine ratio >200 mg/g
12) Had a clinically significant history of suicidal ideation or suicidal behavior occurring in the past 12 months as assessed by the Columbia-Suicide Severity Rating Scale (C-SSRS) at screening
13) Had previously discontinued treatment with Tecfidera due to tolerability issues and/or lack of efficacy
14) Had a history of treatment with or had received any of the following:
    - Total lymphoid irradiation, cladribine, T-cell or T-cell receptor vaccination, total body irradiation, or total lymphoid irradiation at any time
    - Stem cell transplantation at any time
    - Mitoxantrone or other immunosuppressant agents (e.g., cyclosporine, cyclophosphamide, methotrexate, mycophenolate) within 2 years prior to Visit 2
    - Teriflunomide within 2 years of Visit 2, unless the serum/plasma concentration of teriflunomide was <0.020 µg/mL (<20 ng/mL) prior to Visit 2 (an accelerated elimination procedure for teriflunomide with cholestyramine was permitted during screening)
    - Natalizumab within 2 months prior to Visit 2 or any prior use of alemtuzumab
    - Fingolimod within 90 days prior to Visit 2
    - Daclizumab within 6 months prior to Visit 2
    - B-cell targeted therapies for the treatment of MS (e.g., ocrelizumab, rituximab) within 12 months of screening; greater than 12 months of screening was permissible with evidence that the CD19 cells had returned to within normal range (per local laboratory reference range)
    - Eligibility related to prior treatment with an investigational drug and/or a commercially available drug for the treatment of MS not listed above within the past 24 months was determined on a case-by-case basis by the Medical Monitor
    - Steroids, with the exception of topical or inhaled steroids, or intravenous immunoglobulin within 30 days prior to Visit 2

Reference ID: 4504656

15) Had current or prior participation in a clinical study within 3 months of screening
16) Were pregnant or breastfeeding or planned to become pregnant or began breastfeeding at any point during the study and for 30 days after any study drug administration
17) Were employed by Alkermes, CRO, or study site (permanent, temporary contract worker, or designee responsible for the conduct of the study) or were immediate family of an Alkermes, CRO, or study site employee. Immediate family was defined as a spouse, parent, sibling or child, whether biological or legally adopted."

For Rollover subjects

1) "Had any finding(s) that in the view of the Investigator or Medical Monitor would compromise the safety of the subject, affect their ability to adhere to the protocol visit schedule or to fulfill visit requirements, or make the subject unsuitable for participation in the study (including overall clinical assessment)
2) Were pregnant or breastfeeding or planned to become pregnant or began breastfeeding at any point during the study and for 30 days after any study drug administration
3) Were employed by Alkermes, CRO, or study site (permanent, temporary contract worker, or designee responsible for the conduct of the study), or were immediate family of an Alkermes, CRO, or study site employee. Immediate family was defined as a spouse, parent, sibling or child, whether biological or legally adopted."

Reviewer Comment: These inclusion and exclusion criteria appear to be reasonable and appropriate.

Demographics

Table 20 delineates the demographics of the subjects enrolled in ALK8700-A301.

Table 20. Reviewer Table. Demographic Characteristics, ALK8700-A301

Demographic Parameters	ALKS 8700 (n=696)
Age (years)	
Mean (SD)	41.9 (11.0)
Median	42
Min, max	18,65
Sex	
Male	191 (27.4%)
Female	505 (72.6%)
Race	
White	638 (91.7%)
Black or African American	48 (6.9%)
Other	10 (1.4%)
Ethnicity	

Reference ID: 4504656

Demographic Parameters	ALKS 8700 (n=696)
Not Hispanic or Latino	668 (96.0%)
Hispanic or Latino	28 (4.0%)
Region	
US	283 (40.7%)
Non-US	413 (59.3%)
Body Mass Index	
Body Mass Index (kg/m^2) (SD)	26.4 (6.3)

Source: ADSL

Reviewer Comment: The demographics of the subjects in ALK8700-A301 appear consistent with those in other studies of RMS. Almost 60% of the subjects were from outside the US.

Table 21 delineates the MS disease characteristics of the subjects enrolled in ALK8700-A301.

Table 21. Reviewer Table. MS Disease Characteristics, ALK8700-A301

Disease Characteristics	ALKS 8700 (n=696)
Baseline EDSS	
Mean (SD)	2.7 (1.5)
Median	2.5
<4 (%)	543 (78.0%)
≥4 (%)	153 (22.0%)
Years since MS Diagnosis (years)	
Mean (SD)	7.6 (7.3)
Median	6
Min, max	0,44
Prior MS Medications	
Mean (SD)	1.7 (1.7)
Median	1
Min, max	0,11
Relapses in last 12 months	
Mean (SD)	0.8 (0.8)
Median	1
Min, max	0,5
Baseline GdE lesions	
Mean (SD)	1.2 (4.0)
Median	0
Min, max	0,61

Source: ADSL

Reference ID: 4504656

Reviewer Comment: The disease characteristics of the subjects in ALK8700-A301 appear consistent with those in other studies of RMS. An Information Request was sent to the Sponsor because the maximum number of prior MS medications appeared unusual and this reviewer was unable to reproduce the descriptive statistics for the number of prior MS medications reported in Table 9 of the CSR (mean 1.2, standard deviation 1.23, median 1.0, minimum 0, maximum 8); the Sponsor replied as follows on 17Jun2019:

> *"While NUMPTRT field in the ADSL dataset contains prior disease-modifying treatments (DMTs) as intended, it also contains non-DMT medications recorded by clinical study sites using the 'Other' free text box on the 'Multiple Sclerosis Prior Treatment History' eCRF. Accordingly, to identify and categorize only DMTs, data generated from the "Multiple Sclerosis Prior Treatment History" eCRF was entered into an external Excel spreadsheet and a medical review was performed to identify prior DMTs from non-DMTs. Prior DMT information from the Excel spreadsheet was used to calculate the descriptive statistics for "Prior DMT(s) for MS" presented in Table 9 of the ALK8700-A301 interim Clinical Study Report (iCSR)."*

The reported mean number of prior MS medications (1.2) seems smaller than would be expected in the MS population at large. This may relate to a population of subjects who are relatively early in their disease course or to a lack of access to the full armamentarium of drugs for RMS.

Duration of Treatment

ALK8700-A301 is ongoing at the time of this review. Table 22 contains summary statistics regarding the study duration as of the cut-off date for the interim iCSR (30Mar2018).

Table 22. Reviewer Table. ALKS8700-A301 Study Duration.

Duration in Study (Days)	
Mean (SD)	359.4 (167.0)
Median	419
Min, max	1,692

Source: ADSL TRTDURD field

Efficacy Results

As an open-label, single-armed study, ALK8700-A301 does not add much evidence to support the efficacy of ALKS 8700; however, the reported subject level annualized relapse rate (ARR) of 0.17 with ALKS 8700 in this study is similar to the ARRs achieved by the pivotal trials of the referenced product (Tecfidera).

Reference ID: 4504656

Deaths

Four deaths occurred in Study A301: two of these were reported in the interim CSRs submitted with the initial NDA, and two were included in the 120-day safety update.

- One subject fell out of a 4th story window. Per report, there was no evidence to suggest that this was a suicide, and this death was not deemed to be related to the study drug.
- One subject died of hypertensive cardiac disease, which was not deemed to be due to the study drug.
- One subject died of a cardiac arrest, which was not deemed to be due to the study drug. Reportedly, EKGs obtained before the fatal event were deemed to be "normal."
- One subject died of bilateral bacterial pneumonia, which was not deemed to be due to the study drug because the subject had "normal" lymphocyte counts.

Reviewer Comment: This review agrees that the first two listed deaths are unlikely to be related to the study drug. Since the fumaric acids do not currently have a known safety signal for cardiac dysrhythmias, the case of cardiac arrest seems unlikely to be related to DRF, especially as prior EKG's were reportedly normal; however, awareness of some safety signals may require many years of exposure to the drug. Because lymphopenia is reported with MMF and because Spencer et al, 2015 suggest a differential effect on lymphocyte subsets, specifically a reduction in CD8+ T-cells which could yield immune suppression despite a "normal" range value in overall lymphocyte count, this reviewer is not convinced that DRF did not play a role in the death from bilateral bacterial pneumonia.

Serious Adverse Events (SAE)

Of the 3,748 TEAE reported in ALK8700-A301, only 72 met the criteria for being serious, and these occurred in 52 subjects. Table 23 delineates the serious adverse events (SAEs) that occurred more than once in Study ALK8700-A301; most of these SAEs were MS relapses, which are an indication for hospital admission in many countries.

Reviewer Comment: MS relapse was by far the most common SAE in Study ALK8700-A301.

Table 23. Reviewer Table. Serious adverse events (SAE) in ALK8700-A301

Preferred Term	N (%)
Multiple sclerosis relapse	35 (5.0%)
Flushing	2 (0.3%)
Respiratory failure	2 (0.3%)
Suicidal ideation	2 (0.3%)

Reference ID: 4504656

Preferred Term	N (%)
VIIIth nerve injury	2 (0.3%)

One of the cases of respiratory failure was in a 21-year-old subject who experienced cough, weakness, hyperthermia, and shortness of breath. He was initially treated as an outpatient with cefixime, but he later presented to an Emergency Department and was found to have a right sided bi-lobar pneumonia and a left-sided hydrothorax, for which he was hospitalized. Testing for HIV and Mycobacterium tuberculosis was negative. The study drug was held during the hospitalization but resumed after the subject was discharged.

> *Reviewer Comment: Although the Investigator considered the events of pneumonia and respiratory failure to be probably not related to the study drug, lymphocyte changes with DRF, particularly CD8+ lymphopenia, may increase the risk of infection.*

The other case of respiratory failure occurred in a 35 yo subject with a history of asthma and tobacco use who developed status asthmaticus and was admitted to the hospital. Reportedly, the subject had sick contacts at home who had symptoms of an upper respiratory infection. Note is made of a third case for which respiratory failure was not coded but is reported in the description of another SAE: this case involves a 24 yo subject who was involved in a motor vehicle accident (MVA) and sustained multiple injuries., including multiple rib fractures, a right diaphragm injury, a right hemothorax, and a left pneumothorax. Reportedly, the subject appeared to be intoxicated at the scene of the accident.

> *Reviewer Comment: Although the Investigator considered the case of respiratory failure in the setting status asthmaticus to be definitely not related to the study drug, this reviewer wonders if an upper respiratory infection (URI) could have been a precipitating factor and if the risk of a URI was increased by the use of DRF. The respiratory issues with the subject who experienced an MVA is unlikely to be related to the study drug given the description of the injuries sustained, and the report of intoxication at the scene of the accident.*

One of the subjects with suicidal ideation was a 49 yo man with a history of depression, anxiety, and panic attacks was hospitalized after presenting with "depression, anger, and fleeting suicidal thoughts without a plan," and feeling hopeless and helpless. Reportedly, this subject was not taking his antidepressant medications. The Investigator assess the event as "definitely not related to study drug," but the subject withdrew from the study. The other event of suicidal ideation occurred in a 40 yo woman who reportedly did not have a history of depression or suicidal ideation; however, she reported "symptoms of crying spells and staying in bed most of the day" after her daughter moved out of the house unexpectedly. Although the Investigator deemed that the event was not related to the study drug, the subject was

Reference ID: 4504656

withdrawn from the study. There was a case of a suicide attempt in a 35yo subject with a substance-induced psychotic disorder.

> *Reviewer Comment: Depression and anxiety are very common (but under-recognized) in people with MS, and all of these cases had confounding factors; therefore, it is reasonable to suggest that these two events of suicidal ideation (and the suicide attempt) may not be related to the study drug.*

The cases of "VIII nerve injury" involved a 40 yo woman who developed a "strong" headache and then felt dizzy and unstable and was speaking incoherently. Neurology and otorhinolaryngology suspected a central etiology to her symptoms; reportedly a CT scan showed "old ischemic lesions in the borderline circulation zones, bitemporal cortical atrophy, and an arachnoid cyst in the right temporal" pole.

> *Reviewer Comment: The SAE of "VIII nerve injury" is reported twice for the same subject. The investigator considered this event related to MS, which is reasonable, although the findings on the subject's head CT suggests that cerebrovascular disease may be another plausible etiology of her symptoms. Either potential etiology does not appear directly related to the study drug.*

Treatment Emergent Adverse Events (TEAE)

Table 24 contains a summary of the treatment emergent adverse events (TEAE) submitted in the ADAEA dataset submitted in the NDA for Study ALK8700-A301.

Table 24. Reviewer Table. TEAE in ALK8700-A301

AEDECOD	n (%)
Flushing	237 (34.1)
MS relapse	107 (15.4%)
Nasopharyngitis	85 (12.2%)
Diarrhea	75 (10.8%)
URI	74 (10.6%)
UTI	53 (7.6%)
Pruritis	53 (7.6%)
Headache	48 (6.9%)
Nausea	47 (6.8%)
Fatigue	44 (6.3%)
Erythema	42 (6.0%)
Sinusitis	36 (5.2%)
ALT increase	34 (4.9%)
Arthralgia	33 (4.7%)

Reference ID: 4504656

AEDECOD	n (%)
Dizziness	31 (4.5%)
Abdominal pain	31 (4.5%)
Lymphopenia	31 (4.5%)
Paresthesia	31 (4.5%)

Reviewer Comment: Table 24 suggests that flushing, MS relapses, infections, GI intolerance, and headache are the most common TEAE's associated with ALKS 8700. Although interpretation is limited by the lack of a comparator arm, these TEAE's appear similar to what would be expected with DMF.

Table 24 summarizes AEDECOD from the ADAEA dataset, in which the same AE may be reported multiple times for the same subject or in which similar AEs may be coded somewhat differently. An AE summary in which an AE is only counted once per subject and in which related AEs are grouped together may give a clearer picture of the safety of a medication; the results of the Office of Drug Evaluation-1 (ODE-1) safety analysis tool follow in Table 25.

Table 25. Reviewer Table. ODE-1 Analysis of TEAE in ALK8700-A301

Preferred Term	N (%)
Flushing, feeling hot, erythema, generalized erythema[1]	305 (44%)
infection, all	297 (43%)
URI, cold, rhinitis, upper resp tract infection, flu-like illness	211 (30%)
multiple sclerosis relapse, multiple sclerosis[1]	112 (16%)
diarrhea, colitis, enteritis, proctitis, gastroenteritis, C-diff	92 (13%)
abdominal pain, distension, bloating, spasm, IBS, megacolon	87 (13%)
dyspepsia, N, V, indigestion, epigastric pain, gastritis, duoden	70 (10%)
asthenia, fatigue, malaise, weakness, narcolepsy	69(10%)
Pruritis	64 (9%)
infection, viral	63 (9%)
Headache	61 (9%)
UTI	60 (9%)
leukopenia (neutropenia and/or lymphopenia)	60 (9%)
Nausea, vomiting	60 (9%)
fall, dizziness, balance disorder	58 (8%)
fall, dizziness, balance disorder, gait disturbance, difficulty walking	58 (8%)
somnolence, fatigue, sedation	53 (8%)
Lymphopenia	49 (7%)
GOT, GPT, GGTP, LFTs	42 (6%)

Reference ID: 4504656

Preferred Term	N (%)
arthralgia, arthritis, arthrosis	39 (6%)
bronchitis, bronchiolitis, tracheitis, alveolitis, bronchiectasis	33 (5%)

[1] Queries added to this tool for MS relapses and flushing.

Reviewer Comment: Although it is not surprising that infection TEAEs appear more common with combining similar TEAE codings together, the frequency of the other TEAEs seen with DRF in ALK8700-A301 appear consistent with the known safety of the referenced product, Tecfidera, including a high incidence of flushing and GI side effects. Certainly, the utility of a safety analysis in the open-label, single-armed study is somewhat limited but does not suggest the emergence of any new, unexpected safety issues with DRF.

TEAE leading to discontinuation

There were 47 TEAE that led subjects to discontinue Study ALK8700-A301. Table 26 delineates the TEAE leading to discontinuation that occurred more than once in this study.

Table 26. Reviewer Table, TEAE leading to discontinuation of ALK8700-A301

Preferred Term	N (%)
Multiple sclerosis relapse	7 (1.0%)
Flushing	4 (0.6%)
Lymphopenia	4 (0.6%)
Liver function test increased	2 (0.3%)
Urticaria	2 (0.3%)

Reviewer Comment: The TEAE leading subjects to discontinue Study ALK8700-A301 are adverse events that are expected with the referenced product, Tecfidera.

Severe TEAE

Most of the TEAE that occurred in ALK8700-A301 were classified as mild or moderate in severity; only 67 of the 3,748 TEAE were graded as severe in intensity. Table 27 delineates the TEAEs that were classified as severe and that occurred more than once in this study .

Table 27. Reviewer Table. TEAE graded as severe in ALK8700-A301

Preferred Term	N (%)
Multiple sclerosis relapse	6 (0.9%)
Arthralgia	4 (0.6%)
Dizziness	4 (0.6%)
Flushing	4 (0.6%)

Reference ID: 4504656

Preferred Term	N (%)
Back pain	3 (0.4%)
Diarrhea	3 (0.4%)
Depression	2 (0.3%)
Fall	2 (0.3%)
Fatigue	2 (0.3%)
Generalized erythema	2 (0.3%)
Neck pain	2 (0.3%)

Reviewer Comment: Few TEAE in ALK8700-A301 were deemed to be severe in etiology, and many of these seem to be either expected given the known side effect profile of the referenced product (Tecfidera) or attributable to the underlying disease.

Vital Signs

The mean (and standard deviation) change from baseline for systolic blood pressure was -0.3 (11.6) mm Hg and for diastolic blood pressure was 0.1 (8.8) mm Hg. The change from baseline in heart rate was 1.9 (9.9). This reviewer was able to replicate the contents of Table 28 showing the number of subjects with significant change in blood pressure or heart rate.

Reference ID: 4504656

Table 28. Applicant Table. Number of Subjects with Significant Change in Vital Signs

Parameter/PCS Criteria	De Novo (N=593) n/m (%)	Rollovers From A302 Part A		All Subjects (N=696) n/m (%)
		ALKS 8700 (N=53) n/m (%)	DMF (N=50) n/m (%)	
Systolic Blood Pressure				
Low: ≤90 mmHg and decrease ≥20 mmHg	14/581 (2.4)	0/52 (0)	2/49 (4.1)	16/682 (2.3)
High: ≥180 mmHg and increase ≥20 mmHg	3/582 (0.5)	0/52 (0)	0/50 (0)	3/684 (0.4)
Diastolic Blood Pressure				
Low: ≤50 mmHg and decrease ≥15 mmHg	8/580 (1.4)	1/52 (1.9)	2/49 (4.1)	11/681 (1.6)
High: ≥105 mmHg and increase ≥15 mmHg	5/581 (0.9)	1/52 (1.9)	1/50 (2.0)	7/683 (1.0)
Heart Rate				
Low: ≤50 bpm and decrease ≥15 bpm	5/579 (0.9)	0/51 (0)	0/50 (0)	5/680 (0.7)
High: ≥120 bpm and increase ≥15 bpm	1/582 (0.2)	0/52 (0)	0/50 (0)	1/684 (0.1)

Abbreviations: DMF=dimethyl fumarate; m=number of subjects with non-PCS value with respect to the specific PCS criterion at baseline and at least one post-baseline assessment; N=total number of subjects; n=number of subjects who met the PCS criteria; PCS=potentially clinically significant.

Reviewer Comment: The changes from baseline in systolic blood pressure, diastolic blood pressure, and heart rate appear to be minimal after starting DRF.

Lymphopenia

A reduction in lymphocyte counts, including lymphopenia, is an adverse event of special interest as it is known to occur with the referenced product, Tecfidera. Figure 13 shows the change in lymphocytes counts in Study ALK8700-A301, at least until 30Mar2018. The applicant's analysis also suggests that 32.7% of subjects shifted from a normal / high lymphocyte counts to a low lymphocyte count. Table 29 shows the number of subjects with lymphopenia in ALK8700-A301 stratified by the degree of lymphopenia.

Reference ID: 4504656

Figure 13. Applicant Figure. Change in lymphocyte counts in ALK 8700-A301

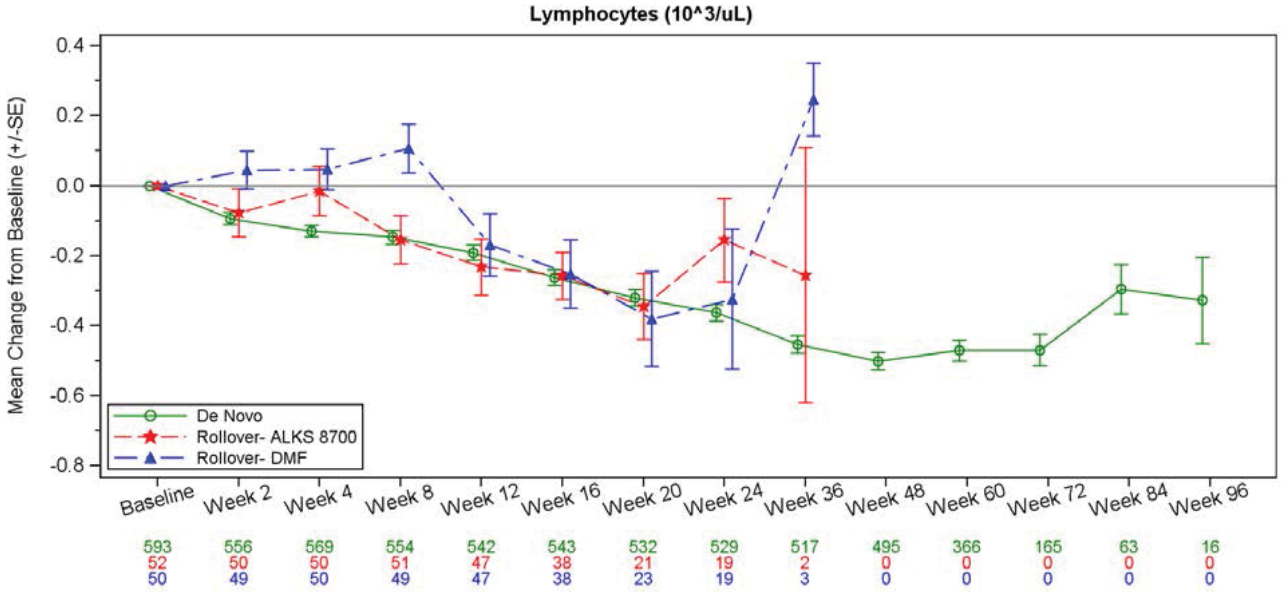

Table 29. Applicant Table. Lymphopenia with ALKS 8700 stratified by grade

Parameter	De Novo (N=593) n/m (%)	Rollovers From A302 Part A: ALKS 8700 (N=53) n/m (%)	Rollovers From A302 Part A: DMF (N=50) n/m (%)	All Subjects (N=696) n/m (%)
<0.91 × 10^9/L	220/579 (38.0)	14/52 (26.9)	6/50 (12.0)	240/681 (35.2)
<0.8 × 10^9/L	151/579 (26.1)	11/52 (21.2)	2/50 (4.0)	164/681 (24.1)
<0.5 × 10^9/L	36/579 (6.2)	1/52 (1.9)	1/50 (2.0)	38/681 (5.6)
Lymphopenia by NCI-CTCAE Grade[a]				
Grade 1	63/579 (10.9)	3/52 (5.8)	4/50 (8.0)	70/681 (10.3)
Grade 2	115/579 (19.9)	10/52 (19.2)	1/50 (2.0)	126/681 (18.5)
Grade 3	35/579 (6.0)	1/52 (1.9)	1/50 (2.0)	37/681 (5.4)
Grade 4	1/579 (0.2)	0/52 (0)	0/50 (0)	1/681 (0.1)

Abbreviations: DMF=dimethyl fumarate; LLN=lower limit of normal range; m=number of subjects in each column with at least one post-baseline assessment in the treatment period; N=total number of subjects; n=number of subjects among which met each lymphopenia grade; NCI-CTCAE=National Cancer Institute-Common Terminology Criteria for Adverse Events.

[a] NCI-CTCAE Lymphopenia grades: Grade 1 (<LLN - 0.8 × 10^9/L); Grade 2 (<0.8 - 0.5 × 10^9/L); Grade 3 (<0.5 - 0.2 × 10^9/L); and Grade 4 (<0.2 × 10^9/L).

Reviewer Comment: Similar to the referenced product, it appears that ALKS 8700 may have a risk of lymphopenia; however, most of the cases of lymphopenia were grade 1-3.

Reference ID: 4504656

Because ALK8700-A301 is a single-armed, open-label study, this reviewer cannot conclude whether the incidence of lymphopenia is different than would be expected with Tecfidera; however, an adequate pharmacologic bridge between ALKS 8700 and the referenced product would allow scientific inferences to be made. As with the referenced product, the paucity of serious infections with ALKS 8700, including in those with lymphopenia, is somewhat reassuring, although there have been cases of progressive multifocal leukoencephalopathy (PML) in subjects taking Tecfidera over longer periods of administration and therefore a potential risk of PML exists for DRF in the post-marketing setting as well.

Transaminase Elevations

Transaminase elevation is also an adverse event of special interest as it is known to occur with the referenced product, Tecfidera. Table 30 shows the number of subjects with potentially clinically significant elevations in liver function parameters in Study ALK8700-A301, at least until 30Mar2018; this reviewer is able to reproduce the results of this table but notes that one subject who rolled over from ALK-8700-A302 had a baseline bilirubin of 3.2 mg/dL.

Table 30. Applicant Table. Clinically significant liver function abnormalities in ALK8700-A301

Parameter	De Novo (N=593) n (%)	Rollovers From A302 Part A		All Subjects (N=696) n (%)
		ALKS 8700 (N=53) n (%)	DMF (N=50) n (%)	
ALT				
>3 × ULN	14 (2.4)	1 (1.9)	1 (2.0)	16 (2.3)
>5 × ULN	7 (1.2)	0	0	7 (1.0)
>10 × ULN	2 (0.3)	0	0	2 (0.3)
AST				
>3 × ULN	9 (1.5)	0	0	9 (1.3)
>5 × ULN	5 (0.8)	0	0	5 (0.7)
>10 × ULN	2 (0.3)	0	0	2 (0.3)
ALP				
>3 × ULN	0	0	0	0
>5 × ULN	0	0	0	0
>10 × ULN	0	0	0	0
Total Bilirubin				
>1.5 × ULN	4 (0.7)	0	0	4 (0.6)
>2 × ULN	0	0	0	0
Hy's Law Criteria[a]	0	0	0	0

Abbreviations: ALP=alkaline phosphatase; ALT=alanine aminotransferase; AST=aspartate aminotransferase; DMF=dimethyl fumarate; N=total number of subjects; n=number of subjects with abnormal results; ULN=upper limit of normal.
[a] Total bilirubin ≥2 × ULN and ALT or AST ≥3 × ULN

Reference ID: 4504656

Reviewer Comment: Similar to the referenced product, it appears that ALKS 8700 infrequently causes elevations in laboratory signs of liver injury. Because ALK8700-A301 is a single-armed, open-label study, this reviewer cannot conclude whether the incidence of transaminase elevations is different than would be expected with Tecfidera (or placebo), although the values above are reminiscent of those seen with the referenced product. An adequate pharmacologic bridge between DRF and the referenced product would suggest equivalence of the risk of liver injury between the referenced product and ALKS 8700.

The Clinical Pharmacology review notes a 36% increase in the exposure of a major metabolite (HES) in subjects with mild renal impairment as defined by an estimated glomerular filtration rate (eGFR) of 60 to 89 mL/min/1.73m^2); this exposure is increased by a factor of 2-3 in subjects with moderate or severe renal impairment, but these subjects were to be excluded from Study A301. To determine if this increased exposure to HES is clinically relevant, an Information Request was sent on 7/24/2019 asking the Sponsor to provide a summary of TEAE and SAEs that had occurred in ALK8700-A301 stratified by eGFR category (60 to 89 mL/min/1.73m^2 and >= 90 mL/min/1.73m^2). There was no appreciable difference in SAE, and the TEAEs are delineated in Figure 14.

Reference ID: 4504656

Figure 14. Sponsor Table. TEAE stratified by eGFR category in ALK8700-A301

System Organ Class Preferred Term	Diroximel Fumarate GFR ≥90 (normal) N=689 n (%)	Diroximel Fumarate GFR 60 to 89 (mild impairment) N=199 n (%)
Blood and lymphatic system disorders	71 (10.3)	22 (11.1)
Lymphopenia	45 (6.5)	18 (9.0)
Gastrointestinal disorders	197 (28.6)	68 (34.2)
Diarrhoea	72 (10.4)	22 (11.1)
Nausea	47 (6.8)	14 (7.0)
Constipation	24 (3.5)	11 (5.5)
General disorders and administration site conditions	130 (18.9)	38 (19.1)
Fatigue	52 (7.5)	10 (5.0)
Infections and infestations	270 (39.2)	84 (42.2)
Nasopharyngitis	80 (11.6)	16 (8.0)
Upper respiratory tract infection	71 (10.3)	19 (9.5)
Urinary tract infection	47 (6.8)	27 (13.6)
Sinusitis	29 (4.2)	18 (9.0)
Investigations	135 (19.6)	49 (24.6)
Alanine aminotransferase increased	31 (4.5)	13 (6.5)
Musculoskeletal and connective tissue disorders	146 (21.2)	60 (30.2)
Arthralgia	32 (4.6)	16 (8.0)
Muscle spasms	16 (2.3)	14 (7.0)
Back pain	29 (4.2)	11 (5.5)
Nervous system disorders	272 (39.5)	71 (35.7)
Multiple sclerosis relapse	121 (17.6)	23 (11.6)
Headache	51 (7.4)	16 (8.0)
Dizziness	38 (5.5)	6 (3.0)
Paraesthesia	28 (4.1)	11 (5.5)
Skin and subcutaneous tissue disorders	153 (22.2)	45 (22.6)
Pruritus	43 (6.2)	16 (8.0)
Erythema	41 (6.0)	6 (3.0)
Vascular disorders	215 (31.2)	70 (35.2)
Flushing	197 (28.6)	61 (30.7)
Hypertension	5 (0.7)	11 (5.5)

Reference ID: 4504656

Reviewer Comment: Overall, the distribution of TEAEs does not appear significantly different between subjects with normal renal function and those with mild renal impairment. The increase in the frequency of hypertension and urinary tract infection in subjects in subjects with an eGFR between 60 to 89 mL/min/1.73m^2 is likely attributable to the underlying renal impairment and the increased age of this cohort of subjects. The increases in arthralgia and muscle spasms are somewhat more difficult to explain but may potentially relate to electrolyte disturbances.

5.3.12 Study ALK8700-A302

Study Title
A Phase 3 Study in Subjects with Relapsing-Remitting Multiple Sclerosis to Evaluate the Tolerability of ALKS 8700 and Dimethyl Fumarate

Study Centers
65 sites, 59 of which are in the United States and 6 of which are in Poland

Study Objective
In addition to continuing to evaluate the safety and tolerability of ALKS 8700 in adults with RMS, ALK 8700-A302 will also evaluate "the utility of 2 GI symptom scales (Individual GI Symptom and Impact Scale [IGISIS] and Global GI Symptom and Impact Scale [GGISIS]) and endpoints derived from the scales in assessing GI tolerability in adult subjects with RRMS after administration of ALKS 8700 or DMF."

Methodology
ALK8700-A302 is a 2-part, multicenter, randomized, double-blind study in which adult subjects with RMS are randomized 1:1 to either ALKS 8700 or DMF. Part A and Part B of the study are identical. Part A of the study has been completed, so its data is submitted with this NDA; Part B of the study is ongoing. This study will utilize the IGISIS and GGISIS to compare the GI tolerability of ALKS 8700 and DMF.

Subjects will take the initial dose of the assigned study medication (231 mg of ALKS 8700 or 120 mg of DMF twice daily) for one week before increasing to the maintenance dose (462 mg or 240 mg, respectively) of the study medication. The GI scales will be administered to subjects during the last week of the 4-week screening period and during the 5 weeks that subjects take the study medication. After completing the treatment phase of the study, subjects will return for a 2-week follow-up visit. Subjects completing ALK8700-A302 have the option of rolling over into the ALK8700-A301 study.

Reference ID: 4504656

Reviewer Comment: The objective and the methodology of Study ALK8700-A302 appears reasonable and appropriate, although this review is not aware that the IGISIS and GGISIS have been validated in subjects with MS.

Figure 15. Applicant Figure. ALK8700-A302 Study Design

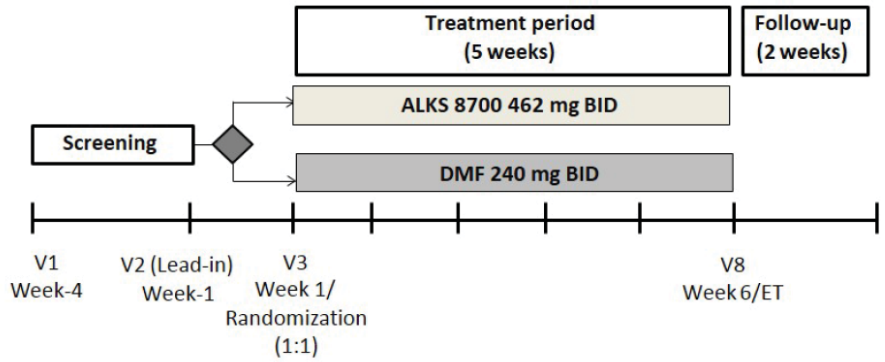

Abbreviations: BID=twice daily; DMF=dimethyl fumarate; ET=early termination; V=visit.
Subjects completing the 5-week treatment period will either continue into the ALK8700-A301 long-term safety study or enter the safety follow-up period and return to Visit 9.

Number of Subjects (Planned and Analyzed)

A total of 118 subjects (of the 120 planned) received study medication in Part A of ALK8700-A302. It is anticipated that 300 subjects will be randomized 1:1 to ALKS 8700 or DMF in Part B of the study.

Inclusion Criteria

For inclusion in ALK8700-A302, subjects were required to meet all of the criteria below:

1. "Was willing and able to provide informed consent
2. Was capable of understanding and complying with the protocol
3. Were male or female adults aged 18 to 65 years, inclusive, at screening (Visit 1)
4. Had a confirmed diagnosis of RRMS according to the revised 2010 McDonald criteria
5. Had a baseline Expanded Disability Status Scale (EDSS) score of 0.0 to 6.0 at screening (Visit 1) and randomization (Visit 3)
6. Was neurologically stable with no evidence of relapse within 30 days prior to randomization (Visit 3)
7. Had agreed to use an acceptable method of contraception for the duration of the study and for 30 days after any study drug administration, was surgically sterile or post-menopausal"

Reviewer Comment: The aforementioned inclusion criteria appear reasonable and appropriate.

Exclusion Criteria

Reference ID: 4504656

Any of the following was regarded as a criterion for exclusion from the study:

1. "Had any finding(s) that, in the view of the Investigator or the Medical Monitor, would compromise the safety of the subject, affect the subject's ability to adhere to the protocol visit schedule or to fulfill visit requirements, or would make the subject unsuitable for participation in the study (including overall clinical assessment)
2. Had a diagnosis of primary progressive, secondary progressive, or progressive relapsing MS, as defined by Lublin and Reingold (1996)
3. Had a history of clinically significant cardiovascular, pulmonary, GI (including inflammatory bowel disease, peptic ulcer disease and irritable bowel syndrome), dermatologic, psychiatric, neurologic (other than MS), endocrine, renal and/or other major disease that would preclude participation in a clinical study
4. Had a history of GI surgery (except appendectomy that occurred more than 6 months prior to screening; other prior surgeries may have been permitted based on Medical Monitor approval)
5. Had a history of clinically significant recurring or active GI symptoms (e.g., nausea, diarrhea, dyspepsia, constipation) within 3 months of screening
6. Chronic use (≥7 days) of medical therapy to treat any GI symptoms within 1 month of screening, unless an exception was granted by the Medical Monitor
7. Had a clinically significant medical condition or observed abnormality at screening (e.g., clinically significant physical examination finding, vital sign result, electrocardiogram (ECG) result, or laboratory test result)
8. Had 2 or more IGISIS individual symptom intensity scores ≥3 during the 1-week lead-in evaluation period prior to randomization (Visit 3)
9. Had completed <75% of the IGISIS and/or GGISIS e-diary entries scheduled to be completed during the lead-in period prior to randomization (Visit 3) unless an exception was granted by the Medical Monitor
10. Had a history of malignancy, unless an exception was granted by the Medical Monitor (e.g., subjects with basal cell carcinoma that was completely excised prior to study entry could remain eligible)
11. Had a history of a myocardial infarction, including a silent myocardial infarction identified on ECG, or unstable angina
12. Had a history of clinically significant drug or alcohol abuse within the past year prior to screening (per Investigator judgment)
13. Had a positive serology test for hepatitis C antibody, hepatitis B surface antigen , or human immunodeficiency virus antibody at screening (Visit 1)
14. Had any of the following abnormal blood tests at screening (Visit 1):
    - Alanine aminotransferase (ALT) or aspartate aminotransferase (AST) ≥2 times the upper limit of normal (ULN)
    - Thyroid-stimulating hormone (TSH) level higher than the ULN by 10% or more at screening
    - Estimated glomerular filtration rate ≤60 mL/min/1.73 m2 (using the Chronic Kidney Disease Epidemiology Collaboration equation)
    - Lymphocyte count <0.9 x 103/µL

Reference ID: 4504656

15. Had any of the following abnormal urine tests at screening (Visit 1):
    - Beta-2 microglobulin >0.3 µg/mL
    - Albumin to creatinine ratio >200 mg/g
16. Had a clinically significant history of suicidal ideation or suicidal behavior in the last 12 months as assessed by the Columbia-Suicide Severity Rating Scale (C-SSRS) at screening (Visit 1)
17. Had a history of treatment with or had received the following:
    - Fumaderm®, Tecfidera, total lymphoid irradiation, cladribine, T-cell or T-cell receptor vaccination, total body irradiation or total lymphoid irradiation at any time
    - Stem cell transplantation at any time
    - Mitoxantrone or other immunosuppressant agents (e.g., cyclosporine, cyclophosphamide, methotrexate, mycophenolate) within 2 years prior to randomization (Visit 3)
    - Teriflunomide within 2 years of Visit 2, unless the serum/plasma concentration of teriflunomide was <0.020 µg/mL (<20 ng/mL) to randomization (Visit 3) (an accelerated elimination procedure for teriflunomide with cholestyramine was permitted during screening)
    - Natalizumab within 8 weeks prior to randomization (Visit 3), or any prior use of alemtuzumab
    - Fingolimod within 90 days prior to randomization (Visit 3)
    - Daclizumab within 6 months prior to Visit 3
    - B-cell targeted therapies for the treatment of MS (e.g., ocrelizumab, rituximab) within 12 months of screening; greater than 12 months of screening was permissible with evidence that the CD19 cells had returned to within normal range (per local lab reference range)
    - Eligibility related to prior treatment with an investigational drug and/or a commercially available drug for the treatment of MS not listed above within the past 24 months was to be determined on a case-by-case basis by the Medical Monitor
    - Steroids, with the exception of topical or inhaled steroids, or IV immunoglobulin within 30 days prior to randomization (Visit 3)
18. Current or prior participation in a clinical trial within 3 months of screening (Visit 1)
19. Was pregnant or breastfeeding or planned to become pregnant or begin breastfeeding at any point during the study and for 30 days after any study drug administration
20. Unwillingness or inability to comply with the requirements of the protocol, including the presence of any condition (physical, mental, or social) that was likely to affect the subject's ability to comply with the protocol
21. Was employed by Alkermes, the CRO, or a study site (permanent, temporary contract worker, or designee responsible for the conduct of the study) or was immediate family of an Alkermes, CRO, or study site employee. Immediate family was defined as a spouse, parent, sibling, or child, whether biological or legally adopted"

    Reviewer Comment: The aforementioned exclusion criteria appear reasonable and appropriate.

Reference ID: 4504656

Demographics

Of the 120 subjects randomized in Part A of ALK8700-A302, 118 (59 in each treatment arm) received at least one dose of the assigned study medication. The demographic characteristics of the subjects is outlined in Table 31, and their baseline disease characteristics are summarized in Table 32.

Table 31. Reviewer Table. Demographic Characteristics, ALK8700-A302 Part A

Demographic Parameters	ALKS 8700 (n=59)	DMF (n=59)
Age (years)		
Mean (SD)	45.6 (11.1)	43.8 (10.0)
Median	48	44
Min, max	24,65	20,64
Sex		
Male	15 (25.4%)	12 (20.3%)
Female	44 (74.6%)	47 (79.7%)
Race		
White	50 (84.7%)	54 (91.5%)
Black or African American	8 (13.6%)	4 (6.8%)
Other	1 (1.7%)	1 (1.7%)
Ethnicity		
Not Hispanic or Latino	57(96.6%)	58 (98.3%)
Hispanic or Latino	2 (3.4%)	1 (1.7%)
Region		
US	45 (76.3%)	45 (76.3%)
Non-US	14 (23.7%)	14 (23.7%)
Body Mass Index		
Body Mass Index (kg/m^2) (SD)	27.7 (6.2)	28.6 (7.4)

Table 32. Reviewer Table. MS Disease Characteristics, ALK8700-A302 Part A

Disease Characteristics	ALKS 8700 (n=59)	DMF (n=59)
Baseline EDSS		
Mean (SD)	2.8 (1.5)	3.0 (1.6)
Median	3	3
<4 (%)	46 (78.0%)	40 (67.8%)
≥4 (%)	13 (22.0%)	19 (32.2%)
Years since MS Diagnosis (years)		

Reference ID: 4504656

Disease Characteristics	ALKS 8700 (n=59)	DMF (n=59)
Mean (SD)	7.6 (8.8)	8.0 (7.4)
Median	6	7
Min, max	0,44	0,23
Prior MS Medications		
Mean (SD)	1.5 (1.4)	1.4 (1.3)
Median	1	1
Min, max	0,9	0,5
Relapses in last 12 months		
Mean (SD)	0.7 (0.8)	0.6 (0.8)
Median	1	0
Min, max	0,3	0,5
Baseline GdE lesions		
Mean (SD)	0.8 (2.0)	1.0 (2.6)
Median	0	0
Min, max	0,9	0,3

Reviewer Comment: The baseline and disease characteristics of the subjects in Part A of ALK8700-A302 appear well-balanced and consistent with those in other studies of RMS.

Duration of Treatment

As noted above, the duration of ALKS8700-A302 is 8 weeks, including a 4-week screening period, 5 weeks of treatment, and a 2-week follow-up visit.

Efficacy Results

Because this application is utilizing the 505(b)(2) regulatory pathway and will rely on the efficacy of the refence listed drug (Tecfidera), it is not required to contain efficacy data; indeed, interim data from this small, 5-week study would contribute little to substantial evidence of effectiveness even if efficacy data were required.

Although endpoints were not prespecified for Part A of ALK 8700-A302, the gastrointestinal tolerability of DRF was assessed by administering the IGISIS and GGISIS via e-dairies. Given the exploratory nature of these endpoints for Part A of this ongoing study, this reviewer did not replicate the results of these analyses but instead pasted an excerpt of the sponsor's conclusions below.

- "The overall results from the IGISIS and GGISIS GI diaries were comparable between subjects treated with ALKS 8700 and DMF, with no statistically significant differences using observed diaries. Statistical comparisons using data

Reference ID: 4504656

from the IGISIS and GGISIS instruments, however, were intended to be exploratory.

- Generally, the results for the IGISIS and GGISIS numerically favored the ALKS 8700 group. However, the mean scores and mean differences between groups were small. In addition, the mean number and percent of days with maximum symptom scores >0 for either GI tolerability instrument were low, which complicates the interpretation of the data derived from these instruments.
- Although the mean number of days with any IGISIS individual symptom intensity score ≥3 numerically favored the group treated with ALKS 8700, the result was not statistically significant. In addition, the majority of subjects (67.8% and 58.6% of subjects in the ALKS 8700 and DMF groups, respectively) did not have any IGISIS individual GI symptom score >3."

Deaths

No deaths were reported in Part A of Study ALK8700-A302.

Serious Adverse Events (SAE)

SAE were reported by three subjects in Part A of Study ALK8700-A302, and two of these were MS relapses considered to be moderate in severity but for which the subjects were hospitalized. One of the MS relapses occurred in the DRF arm of the study, and the other occurred in the DMF arm. The third reported SAE occurred in the DRF arm of the study and involved a 55 yo male subject with a history of hypertension and obesity who was diagnosed with atrial fibrillation on Day 21 of the study after reporting dyspnea, midsternal chest pain radiating to his neck, and palpitations and being found to have an elevated heart rate by the Investigator. He was sent to the Emergency Department, where an EKG showed atrial fibrillation with a heart rate of 150 beats per minute. Thyroid Stimulating Hormone (TSH) and troponins were normal. The subject was given adenosine and started on aspirin, diltiazem, amlodipine, and olmesartan medoxomil; he was also instructed to discontinue his armodafinil. He was also given a dose of IV ceftriaxone for a concomitant upper respiratory tract infection. Subsequently, a cardiologist switched the diltiazem to metoprolol. The Investigator did not consider this event related to the study drug, which was continued.

Reviewer Comment: This reviewer agrees that the atrial fibrillation does not appear to be related to the study drug. Of note, the narrative of this case states that armodafinil was stopped, so it is unclear why this stimulant was not considered to be a potential alternative cause for this event.

Treatment Emergent Adverse Events (TEAE)

Table 33 contains a summary of the treatment emergent adverse events (TEAE) submitted in the ADAEA dataset submitted in the NDA for Part A of Study ALK8700-A302.

Reference ID: 4504656

Table 33. Reviewer Table. TEAE in ALKS 8700-A302, Part A

AEDECOD	DRF 462 mg N=59 (%)	DMF 240 mg n=59 (%)	RR
Flushing	20 (34%)	24 (41%)	0.8
Nausea	12 (20%)	10 (17%)	1.2
Diarrhea	12 (20%)	10 (17%)	1.2
Erythema	5 (8%)	8 (14%)	0.6
Abdominal pain, upper	3 (5%)	10 (17%)	0.3
Pruritis	4 (7%)	5 (8%)	0.8
UTI	4 (7%)	4 (7%)	1.0
Fatigue	4 (7%)	4 (7%)	1.0
Nasopharyngitis	4 (7%)	4 (7%)	1.0
Headache	1 (2%)	6 (10%)	0.2
Feeling hot	3 (5%)	3 (5%)	1.0
Vomiting	3 (5%)	3 (5%)	1.0
ALT increase	2 (3%)	3 (5%)	0.7
Generalized erythema	2 (3%)	2 (3%)	1.0

Reviewer Comment: The frequency and nature of the TEAE's in ALK8700-A302 appears comparable between the two treatment groups and similar to what would be expected with the referenced product, Tecfidera.

Table 33 summarizes AEDECOD from the ADAEA dataset, in which the same AE may be reported multiple times for the same subject or in which similar AEs may be coded somewhat differently. An AE summary in which an AE is only counted once per subject and in which related AEs are grouped together may give a clearer picture of the safety of a medication; the results of the Office of Drug Evaluation-1 (ODE-1) safety analysis tool follow in Table 34.

Reference ID: 4504656

Table 34. Reviewer Table. ODE-1 Safety Analysis, ALK8700-A302, Part A

Preferred Term	DRF 462 mg n=59	DMF 240mg n=59	RR
Flushing, feeling hot, erythema, generalized erythema[1]	28 (47%)	33 (56%)	0.8
diarrhea, colitis, enteritis, proctitis, gastroenteritis, C-diff	14 (23.7%)	12 (20.3%)	1.2
dyspepsia, N, V, indigestion, epigastric pain, gastritis, duoden	14 (23.7%)	11 (18.6%)	1.3
Nausea, vomiting	14 (23.7%)	11 (18.6%)	1.3
infection, all	14 (23.7%)	9 (15.3%)	1.6
abdominal pain, distension, bloating, spasm, IBS, megacolon	12 (20.3%)	14 (23.7%)	0.9
URI, cold, rhinitis, upper resp tract infection, flu-like illness	9 (15.3%)	4 (6.8%)	2.3
asthenia, fatigue, malaise, weakness, narcolepsy	4 (6.8%)	7 (11.9%)	0.6
Pruritis	4 (6.8%)	6 (10.2%)	0.7
UTI	4 (6.8%)	4 (6.8%)	1.0
somnolence, fatigue, sedation	4 (6.8%)	4 (6.8%)	1.0
GOT, GPT, GGTP, LFTs	2 (3.4%)	3 (5.1%)	0.7
multiple sclerosis, multiple sclerosis relapse	2 (3.4%)	2 (3.4%)	1.0
fever, rigors	2 (3.4%)	1 (1.7%)	2.0
rash, eruption, dermatitis	2 (3.4%)	1 (1.7%)	2.0
paresthesia, hypoesthesia	2 (3.4%)	1 (1.7%)	2.0
nephrosis, proteinuria, nephropathy	2 (3.4%)	1 (1.7%)	2.0
Pneumonia	2 (3.4%)	(0%)	-
Constipation	2 (3.4%)	(0%)	-
Headache	1 (1.7%)	6 (10.2%)	0.2
infection, viral	14 (23.7%)	12 (20.3%)	1.2

Reviewer Comment: Although the number of subjects in Part A of ALK8700-A302 is relatively low, the TEAE's seen with DRF appear comparable to those seen with DMF and include a high incidence of flushing and GI side effects. Given the short, 5-week duration of ALK8700-A302, it is not surprising that there were very few MS relapses reported.

TEAE Leading to Study Discontinuation

There were 4 TEAE that led subjects to discontinue Part A of Study ALK8700-A302. Table 35 delineates the TEAE leading to discontinuation that occurred more than once in this study.

Reference ID: 4504656

Table 35. Reviewer Table, TEAE leading to discontinuation of ALK8700-A302, Part A

Preferred Term		DRF 462 mg N=59	DMF 480 mg N=59
Vomiting		1	1
Abdominal pain		0	1
Diarrhea		0	1

Reviewer Comment: There was only one TEAE leading to study discontinuation associated with DRF, and the TEAE in this case (vomiting) is one that is also known to occur with the referenced product, Tecfidera.

Severe TEAE

Most of the TEAE that occurred in Part A of ALK8700-A302 were classified as mild or moderate in severity; only 10 of the 394 TEAE were graded as severe in intensity. Table 35 delineates the TEAEs that were classified as severe and that occurred more than once in this study.

Table 36. Reviewer Table. TEAE graded as severe in ALK8700-A302, Part A

Preferred Term	DRF 462 mg N=59	DMF 480 mg N=59
Flushing	0	4 (6.8%)
Abdominal pain	1 (1.7%)	0
Atrial fibrillation	1 (1.7%)	0
Headache	0	1 (1.7%)
Nausea	1 (1.7%)	0
Pneumonia	1 (1.7%)	0
Vomiting	1 (1.7%)	0

Reviewer Comment: Flushing and GI symptoms are common with both DRF and the referenced product. The case of atrial fibrillation is discussed above in the SAE section.

Vital Signs

The mean (and standard deviation) change from baseline for systolic blood pressure in Part A of Study ALK8700-A302 was -1.1 (12.8) mm Hg and for diastolic blood pressure was -1.9 (9.9) mm Hg. The change from baseline in heart rate was 2.7 (10.3). This reviewer was able to replicate the contents of Table 37 showing the number of subjects with significant change in blood pressure or heart rate.

Reference ID: 4504656

Table 37. Applicant Table. Number of Subjects with Significant Change in Vital Signs

Parameter / PCS Criteria	Treatment Groups		All Subjects (N=118) n/m (%)
	ALKS 8700 (N=59) n/m (%)	DMF (N=59) n/m (%)	
Systolic Blood Pressure			
Low: ≤90 mmHg and decrease ≥20 mmHg	1/58 (1.7)	1/57 (1.8)	2/115 (1.7)
High: ≥180 mmHg and increase ≥20 mmHg	0/58	0/58	0/116
Diastolic Blood Pressure			
Low: ≤50 mmHg and decrease ≥15 mmHg	0/58	1/58 (1.7)	1/116 (0.9)
High: ≥105 mmHg and increase ≥15 mmHg	3/58 (5.2)	1/58 (1.7)	4/116 (3.4)
Heart Rate			
Low: ≤50 bpm and decrease ≥15 bpm	0/56	0/58	0/114
High: ≥120 bpm and increase ≥15 bpm	2/58 (3.4)	0/58	2/116 (1.7)

Abbreviations: DMF=dimethyl fumarate; m=number of subjects with non-PCS baseline with respect to the specific PCS criterion and at least one post-baseline assessment; N=total number of subjects; n=number of subjects among which met the PCS criteria; PCS=potentially clinically significant.

Lymphopenia

A reduction in lymphocyte counts, including lymphopenia, is an adverse event of special interest as it is known to occur with the referenced product, Tecfidera. Although the interim CSR for Part A of ALK8700-A302 suggests that there were no cases of lymphopenia, this reviewer found three subjects on ALKS 8700 who had Grade 2 lymphopenia and five subjects on ALKS 8700 who had Grade 1 lymphopenia. The lowest lymphocyte count for a subject on ALKS 8700 in the ADLB dataset is 0.74 x 10^9/L. Figure 16 is extracted from the CSR for ALK8700-A302 and shows the mean change from baseline in lymphocyte count during the study.

Reference ID: 4504656

Figure 16. Applicant Figure. Mean Change in Lymphocytes - Part A of ALK8700-A302

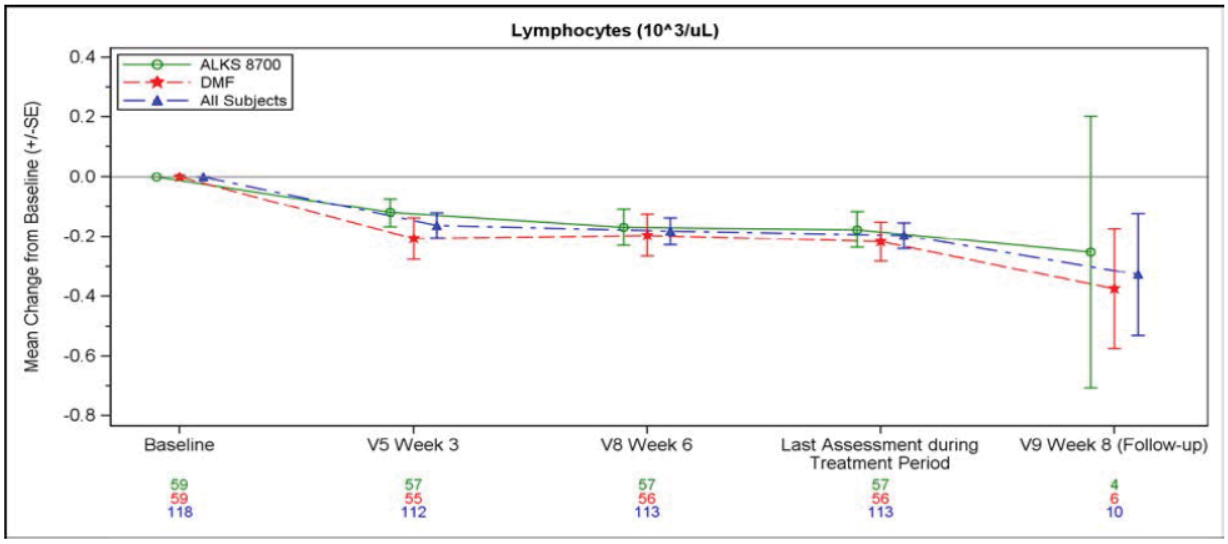

Abbreviations: DMF=dimethyl fumarate; SE=standard error.

Transaminase Elevations

Transaminase elevation is also an adverse event of special interest because it is known to occur with the referenced product, Tecfidera. As per Figure 17 and Table 38, transaminase elevations were quite uncommon in Part A of ALK 8700-A302. There were no Hy's law cases in Part A of Study ALK8700-A302.

Figure 17. Applicant Figure. Mean Change in AST - Part A of ALK8700-A302

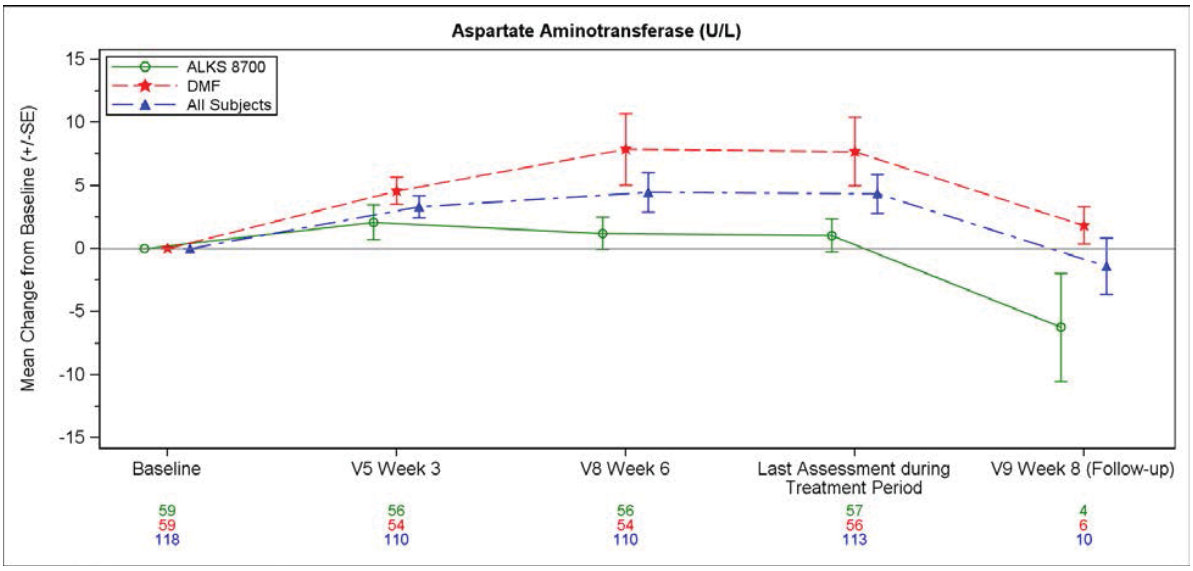

Reference ID: 4504656

Table 38. Applicant Table. Significant liver function abnormalities in ALK8700-A302, Part A

Parameter / PCS Criteria	Treatment Groups		All Subjects (N=118) n (%)
	ALKS 8700 (N=59) n (%)	DMF (N=59) n (%)	
ALT			
>3 × ULN	0	3 (5.1)	3 (2.5)
>5 × ULN	0	0	0
>10 × ULN	0	0	0
AST			
>3 × ULN	0	3 (5.1)	3 (2.5)
>5 × ULN	0	0	0
>10 × ULN	0	0	0
TALP			
>3 × ULN	0	0	0
>5 × ULN	0	0	0
>10 × ULN	0	0	0
Total Bilirubin			
>1.5 × ULN	0	1 (1.7)	1 (0.8)
>2 × ULN	0	1 (1.7)	1 (0.8)
Hy's Law criteria	0	0	0

Abbreviations: ALP=alkaline phosphatase; ALT=alanine aminotransferase; AST=aspartate aminotransferase; DMF=dimethyl fumarate; ULN=upper limit of normal range; N=total number of subjects; n=number of subjects with abnormal results; PCS=potentially clinically significant.

Reviewer Comment: The rates of lymphopenia and transaminase elevation are low but appear comparable between the DRF and the DMF arms of Part A of Study ALK8700-A302.

6. Review of Relevant Individual Trials Used to Support Efficacy

NDA 211855 was submitted via the 505(b)(2) regulatory pathway, so clinical efficacy studies were not performed with diroximel fumarate, which instead relies on PK bridging studies to Tecfidera to allow use of the clinical efficacy findings for this referenced product.

The following table is reprinted from the Clinical Review for NDA 204063 and demonstrates the key efficacy findings leading to the approval of Tecfidera.

Reference ID: 4504656

Table 39. Efficacy results of annualized relapse rate and proportion relapsing, intention to treat population of Tecfidera pivotal trials

Trial 301				Trial 302				
Endpoint	Placebo	240 mg bid	240 mg tid	Endpoint	Placebo	240 mg bid	240 mg tid	GA
Proportion relapsing*	**0.461**	**0.270 p<0.0001**	**0.260 p<0.0001**	**ARR**	**0.401**	**0.224 p<0.0001**	**0.198 p<0.0001**	**0.286 p<0.0001**
ARR	0.364	0.172 p<0.0001	0.189 p<0.0001	Proportion relapsing	0.41	0.291 p=0.002	0.241 p<0.001	0.321 p=0.0097

*Bolded row above represents results for the primary endpoint of the trial

Source: Clinical Review of NDA 204063 authored by Heather Fitter, M.D., page 94

7. Integrated Review of Effectiveness

7.1. Assessment of Efficacy Across Trials

As previously noted, this NDA is a 505(b)(2) application and therefore relies on the adequacy of a pharmacokinetic bridge to MMF (active metabolite of the referenced product, Tecfidera) instead of efficacy data to provide substantial evidence of effectiveness. This claim of equivalence appears justified based on the pharmacokinetic data and nonclinical literature submitted in support of this NDA; however, it remains possible that diroximel fumarate will be shown to have demonstrably different efficacy than that of the referenced product in the future. With an adequate pharmacologic bridge to the reference product, it seems reasonable that any observed difference in efficacy would be attributable to DRF or HES. Reports of relapses, increased lesion burden, and accumulating disability that are out of proportion to those reported with Tecfidera should be noted and evaluated further to confirm the postulated equivalency or to ascertain whether there are clinically relevant differences in the clinical outcomes of treatment with ALKS 8700 versus the referenced product.

7.1.1. Other Relevant Benefits

There do not appear to be any additional benefits with DRF other than what is claimed for the referenced product, Tecfidera.

7.2. Integrated Assessment of Effectiveness

The efficacy of DRF is predicted to be equivalent to that of the referenced product, Tecfidera.

Reference ID: 4504656

8. Review of Safety

8.1. Safety Review Approach

This NDA utilizes the 505(b)(2) regulatory pathway and relies on the referenced product (Tecfidera) to partially inform the safety of DRF. The Applicant submitted data for ten completed Phase 1 studies and two on-going Phase 3 studies. These studies are reviewed independently in Section 5, because in the submitted materials for the pre-NDA meeting, the Applicant proposed not pooling AE data for any of the Phase 1 or 3 studies, and FDA concurred with this approach.

8.2. Review of the Safety Database

8.2.1. Overall Exposure

The overall exposure to ALKS 8700 includes subjects from the ten completed Phase 1 studies and the two on-going Phase 3 studies discussed in Section 5; as per agreement with FDA, pooling of these studies was not performed.

Per the CSR for the largest Phase 3 study (ALK8700-A301), "Mean exposure to study drug for the De Novo, ALKS 8700 Rollover, and DMF Rollover groups was 398.2, 131.3, and 139.9 days, respectively; no subject in the Rollover groups had reached Week 48 of the study by the data cutoff date (30 Mar 2018), and only 15 subjects in the De Novo group had reached Week 96."

8.2.2. Relevant characteristics of the safety population:

The demographic (and disease) characteristics of the subjects in the ten completed Phase 1 and two on-going Phase 3 studies of ALKS 8700 are in Section 5.

8.2.3. Adequacy of the safety database:

The adequacy of the safety database for ALKS 8700 is not relevant because this application relies on the previously accepted safety of the referenced drug, Tecfidera.

8.3. Adequacy of Applicant's Clinical Safety Assessments

8.3.1. Issues Regarding Data Integrity and Submission Quality

There are no apparent issues regarding data integrity and submission quality. The application is of sufficient quality to permit review. This reviewer was able to replicate the safety findings made by the Applicant using the data sets supplied in the application and those obtained by Information Requests.

Reference ID: 4504656

8.3.2. Categorization of Adverse Events

The definition, recording, and follow-up of AEs were specified in the protocol for study ALK8700-A301 as follows:

> "any untoward medical occurrence in a patient or clinical investigation subject administered a pharmaceutical product … which may or may not have a causal relationship with the investigational treatment, may include any clinical or laboratory change that does not commonly occur in that subject and is considered clinically significant. … data collection will begin after a subject signs the ICF and will continue until completion of the safety follow-up visit (Visit 16). Any AE or SAE having an onset after the safety follow-up visit will not be collected or reported unless the investigator feels that the event may be related to the study drug ... All AEs will be followed until resolution, until deemed stable by the investigator, or until the subject is deemed by the investigator to be lost to follow-up."

Out-of-range laboratory values that were deemed to be clinically significant by the investigator were recorded as AEs. Of note, MS disability progression was not deemed to be an AE unless the event met criteria for a serious adverse event (SAE), as defined below. Pregnancy was also not considered an AE, although pregnant subjects were withdrawn from the study.

An SAE is defined as "any AE, occurring at any dose and regardless of causality that results in one or more of the following:

- Death
- Is life-threatening. The subject is at immediate risk of death from the reaction as it occurs. This does not include reaction that, had it occurred in a more severe form, might have caused death.
- Requires inpatient hospitalization or prolongation of existing hospitalization. Hospital admission for elective surgery scheduled prior to study entry is not considered an SAE.
- Results in disability/incapacity (e.g., a substantial disruption of a person's ability to conduct normal life functions)
- Is a congenital anomaly/birth defect."

AEs were graded by severity (mild, moderate, or severe), and their relationship to the study drug was assessed (definitely related, probably related, possibly related, probably not related, definitely not related). AEs that occurred or worsened after the first dose of the study medication were classified as treatment-emergent adverse events (TEAE). Reported terms were coded to preferred terms (PT) and system organ class (SOC) categories using the Medical Dictionary for Regulatory Activities (MedDRA) version 20.1.

Reference ID: 4504656

Reviewer Comment: The methods to categorize, record, and code AEs and SAEs appear reasonable and appropriate, as does the follow-up of AEs. There does not appear to be significant "lumping" and "splitting" of adverse events.

8.3.3. Routine Clinical Tests

The schedule of events for the largest study, ALK8700-A301, is shown in Figure 18. The schedule of events for the other Phase 3 study, ALK8700-A302, consists of essentially the same assessments, albeit with the addition of the IGISIS and GGISIS.

Reference ID: 4504656

Figure 18. Applicant Table. Schedule of Assessments, ALK8700-A301

Visit	Screening	96-Week Open-Label Treatment[1]																
	1[2]	2[3]	TC[15]	3	TC[15]	4	5	6	7	8	9	10	11	12	13	14	15/ ET	16 Follow-up
Day	-28 to -1	1	8 (±2)	15 (±3)	22 (±2)	29 (±3)	57 (±5)	85 (±5)	113 (±5)	141 (±5)	169 (±5)	253 (±5)	337 (±5)	421 (±5)	505 (±5)	589 (±5)	673 (±5)	687 (±5)
Week	-4 to -1	1		2		4	8	12	16	20	24	36	48	60	72	84	96	98
Informed Consent[4]	X																	
Eligibility Criteria Review	X	X[5]																
Demographics and Medical History	X																	
Physical Exam[6]	X	X[5]		X		X	X	X	X	X	X	X	X	X	X	X	X	X
Height[7]	X																	
Weight	X	X[5]				X	X	X			X	X	X	X	X	X	X	X
Urine Pregnancy Test	X	X[5]		X		X	X	X	X	X	X	X	X	X	X	X		
Serology Testing[8]	X																	
Biochemistry, Urinalysis[9], and Hematology	X	X[5]		X		X	X	X	X	X	X	X	X	X	X	X	X	X
Vital Signs[10]	X	X[5]		X		X	X	X	X	X	X	X	X	X	X	X	X	X
Standard 12-Lead ECG	X	X[5]		X		X	X	X			X	X	X		X		X	X
Pharmacokinetic Sampling[11]		X[5]		X		X	X											
Brain MRI[12]		X[13]											X				X	
Timed 25-Foot Walk	X	X[5]						X			X	X	X	X	X	X	X	
EDSS	X	X[5]						X			X	X	X	X	X	X	X	
SF-12		X[5]									X		X		X		X	
EQ-5D-5L		X[5]									X		X		X		X	
C-SSRS[14]	X	X[5]		X		X	X	X	X	X	X	X	X	X	X	X	X	X
Concomitant Medication Review	X	X	X[15]	X	X[15]	X	X	X	X	X	X	X	X	X	X	X	X	X
Adverse Event (AE) Monitoring	X	X	X[15]	X	X[15]	X	X	X	X	X	X	X	X	X	X	X	X	X
Study Drug Dispensation		X		X		X	X	X	X	X	X	X	X	X	X	X		
Study Drug Accountability				X		X	X	X	X	X	X	X	X	X	X	X	X	
Emergency Treatment Card[18]		X		X		X	X	X	X	X	X	X	X	X	X	X	X	

Abbreviations: C-SSRS=Columbia-Suicide Severity Rating Scale; ECG=electrocardiogram; EDSS=Expanded Disability Status Scale; EQ-5D-5L=EuroQol Group health outcome measure 5-level version; ET=early termination; MRI=magnetic resonance imaging; SF-12=12-item Short Form health survey; TC=telephone call.

Reviewer Comment: The safety assessment methods and time points for these assessments seem reasonable and appropriate for the population and indication that are being investigated.

Reference ID: 4504656

8.4. Safety Results

As this is a 505(b)(2) application, the safety of diroximel fumarate should be partially defined by that of the referenced product, Tecfidera, if an adequate pharmacologic bridge is established between the two drugs. The safety results of the ten completed Phase 1 studies and the 2 on-going Phase 3 studies of DRF are reviewed in Section 5; as per agreement with FDA, pooling of these studies was not performed. The review of these studies includes sections on deaths, serious adverse events, treatment emergent adverse events (overall and those classified as severe), discontinuations due to adverse events, vital signs, lymphocyte counts, and transaminases. Since DRF is a small molecule, immunogenicity studies are not applicable. As noted in Section 5.3.10, Study ALK8700-A110 utilized placebo and a positive control (moxifloxacin) to assess the effect of DRF on QTc interval; the QT-IRT group was consulted to review this study, and their review concurred that "no significant QTc prolongated effect of diroximel fumarate was detected in this QT assessment."

8.5. Analysis of Submission-Specific Safety Issues

Not applicable. As a 505(b)(2) application, the safety of DRF is at least partially derived from the referenced product, Tecfidera; however, the review of the individual studies in Section 5 explore the safety signals identified with the referenced product.

8.6. Safety Analyses by Demographic Subgroups

Not applicable. The data from the ten completed Phase 1 studies and the two on-going Phase 3 studies of DRF were not pooled, and as a 505(b)(2) application, the safety of DRF is at least partially derived from the referenced product, Tecfidera.

8.7. Specific Safety Studies/Clinical Trials

Not applicable. As a 505(b)(2) pathway submission, this NDA derives its safety database support from the application for the referenced product, Tecfidera.

8.8. Additional Safety Explorations

8.8.1. Human Carcinogenicity or Tumor Development

Not applicable.

8.8.2. Human Reproduction and Pregnancy

Not applicable.

8.8.3. Pediatrics and Assessment of Effects on Growth

Reference ID: 4504656

Not applicable.

8.8.4. Overdose, Drug Abuse Potential, Withdrawal, and Rebound

Not applicable.

8.9. Safety in the Postmarket Setting

8.9.1. Safety Concerns Identified Through Postmarket Experience

Not applicable. DRF is not currently marketed anywhere in the world, and so no postmarketing safety experience is available for review.

8.9.2. Expectations on Safety in the Postmarket Setting

The expectations regarding safety are that the safety profile of diroximel fumarate will be identical to that of the referenced product, Tecfidera.

8.9.3. Additional Safety Issues From Other Disciplines

No other safety issues were communicated at the time of submission of this review.

9. Advisory Committee Meeting and Other External Consultations

An Advisory Committee meeting was not deemed necessary for this NDA.

10. Labeling Recommendations

10.1. Prescription Drug Labeling

The labeling has not been finalized at the time of this review, but the expectation is that the approved labeling will be essentially identical to the approved labeling for the referenced product, Tecfidera, albeit with the following caveats based on findings from the clinical pharmacology review:

- When DRF was administered with a high-fat/high-calorie meal, the mean C_{max} for MMF was 26% lower compared to that of DMF administered under the same conditions;

Reference ID: 4504656

therefore, administration with Vumerity with a high-fat, high-calorie meal should be avoided.

- Because there was a significant decrease in the C_{max} of MMF when DRF was given with 40% alcohol, administration of Vumerity with alcohol should be avoided.
- Vumerity is not recommended in patients with moderate or severe renal impairment due to a significant increase in the exposure to a DRF major metabolite (HES).

10.2. Nonprescription Drug Labeling

This section is not applicable.

11. Risk Evaluation and Mitigation Strategies (REMS)

A REMS is not required for the safe use of diroximel fumarate in adult patients with RMS. There are no new identified safety issues where a REMS would be expected to mitigate identified risks. Tecfidera, the listed drug, did not have a REMS at the time of its approval in March 2013.

12. Postmarketing Requirements and Commitments

Because this is a 505(b)(2) application, ALKS 8700 may rely on the post-marketing requirements and commitments of the referenced product (Tecfidera) to inform labelling. The following post-marketing requirements currently remain in effect for Tecfidera:

2014-1: Deferred pediatric trial under PREA: A randomized, controlled, parallel group superiority trial in pediatric patients ages 10 through 17 years to evaluate the pharmacokinetics of dimethyl fumarate, and the safety and efficacy of dimethyl fumarate compared to an appropriate control for the treatment of relapsing forms of multiple sclerosis.

PMR 2014-6: A large, long-term, prospective observational study in adult patients with relapsing multiple sclerosis, with the primary objective of determining the nature and incidence of serious infections including opportunistic infections, leiomyomata, malignancies including renal cell cancers, and other serious adverse events including serious renal and hepatic events and other medically significant events occurring with marketed use of Tecfidera (dimethyl fumarate). The study should include characterization of the finding of urinary ketones. A minimum of 5000 multiple sclerosis patients treated with Tecfidera (dimethyl fumarate) should be enrolled and followed for a minimum of 5 years. The final protocol should reflect agency agreement and be submitted prior to starting the study.

Reference ID: 4504656

13.Appendices

13.1. References

Barkhof F. MRI in multiple sclerosis: Correlation with expanded disability status scale (EDSS). *Mult Scler* 1999; 5(4): 283-286.

Compston A, Coles A. Multiple Sclerosis. Lancet 2008; 372: 1502-1517.

Confavreux C, Vukusic S, Moreau T, Adeleine P. Relapses and progression of disability in multiple sclerosis. N Engl J Med 2000; 343:1430-8.

Confavreux C, Vukusic S, Adeleine P. Early clinical predictors and progression of irreversible disability in multiple sclerosis: an amnesic process. Brain 2003; 126: 770-782.

Confavreux C, Vukusic S. Age at disability milestones in multiple sclerosis. Brain 2006; 129: 595-605.

Correale J, Gaitan MI, Ysrraelit MC, Fiol MP. Progressive multiple sclerosis: from pathogenic mechanisms to treatment. Brain 2017, 140: 527-546.

Fox RJ, Miller DH, Phillips JT, Hutchinson M, Havrdova E, Kita M, Yang M, Raghupathi K, Novas M, Sweetser MT, Viglietta V, and Dawson KT. Placebo-controlled Phase 3 study of oral BG-12 or glatiramer in multiple sclerosis. N Engl J Med 2012; 367:1087-1097.

Gold R, Kappos L, Arnold DA, Bar-Or A, Giovannoni G, Selmaj K, Tornatore C, Sweetser MT, Yang M, Sheikh SI, and Dawson KT. Placebo-controlled Phase 3 study of oral BG-12 for relapsing multiple sclerosis. N Engl J Med 2012; 367:1098-1107.

Kurtzke JF. On the evaluation of disability in multiple sclerosis. Neurology 1961; 11:686-694.

Lublin FD, Baier M, Cutter G. Effect of relapses on development of residual deficit in multiple sclerosis. Neurology 2003;61:1528-32.

Lublin FD, Reingold SC, Cohen JA, Cutter GR, et al. Defining the clinical course of multiple sclerosis: the 2013 revisions. Neurology 2014, 83: 278-86.

Mahad DH, Trapp BD, Lassmann H. Pathological mechanisms in progressive multiple sclerosis. Lancet Neurol 2015; 14: 183-193.

Reference ID: 4504656

Paz Soldan MM, Novotna M, Abou Zeid N, et al. Relapses and disability accumulation in progressive multiple sclerosis. Neurology 2015; 84:81-8.

Polman CH, Reingold SC, Banwell B, et al. Diagnostic criteria for multiple sclerosis: 2010 revisions to the McDonald criteria. Ann Neurol 2011; 69:292-302.

Reich DS, Lucchinetti CF, Calabresi PA. Multiple Sclerosis. N Engl J Med 2018; 378:169-180.

Sormani MP, Bonzano L, Roccatagliata l, Cutter GR, Mancardi GL, and Bruzzi P. Magnetic resonance imaging as a potential surrogate for relapses in multiple sclerosis: A meta-analytic approach. *Ann Neurol* 2009; 65: 268-275.

Sormani MP, Bonzano L, Roccatagliata l, Mancardi GL, Uccelli A, and Bruzzi P. Surrogate endpoints for EDSS worsening in multiple sclerosis: A meta-analytic approach. Neurology 2010; 75(4): 302-309.

Sormani MP, Bruzzi P. MRI lesions as a surrogate for relapses in multiple sclerosis: a meta-analysis of randomised trials. Lancet Neurol 2013; 12: 669-676.

Spencer CM, Crabtree-Hartman EC, Lehmann-Horn K, Cree BAC, Zamvil SS. Reduction of $CD8^+$ T lymphocytes in multiple sclerosis patients treated with dimethyl fumarate. Neurol Neuroimmunol Neuroinflamm 2015; 2(3): e76.

Thompson AJ, Banwell BL, Barkhof F, Carroll WM, Coetzee T, Comi G, et al. Diagnosis of multiple sclerosis: 2017 revisions of the McDonald criteria. Lancet Neurol 2018; 17(2): 162-173.

Tremlett H, Yousefi M, Devonshire V, Rieckmann P, Zhao Y. Impact of multiple sclerosis relapses on progression diminishes with time. Neurology 2009; 73(20): 1616-1623.

Wallin M, Culpepper WC, Campbell JD, Nelson LM, et al. “The prevalence of multiple sclerosis in the United States: A population based healthcare database approach.” Neurology 2019: 92(10): e1029-e1040.

Weinshenker BG, Bass B, Rice GP, et al. The natural history of multiple sclerosis: a geographically based study. I. Clinical course and disability. Brain 1989;112:133-46.

Yadav SK, Soin D, Ito K, Dhib-Jalbut S. Insight into the mechanism of action of dimethylfumarate in multiple sclerosis. J Mol Med (Berl) 2019; 97(4):463-472.

Reference ID: 4504656

13.2. Financial Disclosure

Covered Clinical Study (Name and/or Number): the ten Phase 1 and two Phase 3 studies reviewed in Section 5

Was a list of clinical investigators provided:	Yes ☒	No ☐ (Request list from Applicant)
Total number of investigators identified: 139		
Number of investigators who are Sponsor employees (including both full-time and part-time employees): 0		
Number of investigators with disclosable financial interests/arrangements (Form FDA 3455): 1		
If there are investigators with disclosable financial interests/arrangements, identify the number of investigators with interests/arrangements in each category (as defined in 21 CFR 54.2(a), (b), (c) and (f)): Compensation to the investigator for conducting the study where the value could be influenced by the outcome of the study: 0 Significant payments of other sorts: 1 Proprietary interest in the product tested held by investigator: 0 Significant equity interest held by investigator in Sponsor: 0 Sponsor of covered study: 0		
Is an attachment provided with details of the disclosable financial interests/arrangements:	Yes ☒	No ☐ (Request details from Applicant)
Is a description of the steps taken to minimize potential bias provided:	Yes ☒	No ☐ (Request information from Applicant)
Number of investigators with certification of due diligence (Form FDA 3454, box 3) 0		
Is an attachment provided with the reason: N/A	Yes ☐	No ☐ (Request explanation from Applicant)

Reference ID: 4504656

APPEARS THIS WAY ON ORIGINAL

Reference ID: 4504656

This is a representation of an electronic record that was signed electronically. Following this are manifestations of any and all electronic signatures for this electronic record.

/s/

DAVID E JONES
10/10/2019 02:08:12 PM

PAUL R LEE
10/10/2019 06:16:17 PM