CENTER FOR DRUG EVALUATION AND RESEARCH

Approval Package for:

Application Number: 020280/S008

Trade Name: GENOTROPIN

Generic Name: SOMATROPIN (rDNA ORIGIN) FOR INJECTION

Sponsor: PHARMACIA ANDUPJOHN, INC.

Approval Date: 10/31/97

CENTER FOR DRUG EVALUATION AND RESEARCH

APPLICATION: 020280/S008

CONTENTS

	Included	Pending Completion	Not Prepared	Not Required
Approval Letter	X			
Tenative Approval Letter				
Approvable Letter				
Final Printed Labeling				
Medical Review(s)	X			
Chemistry Review(s)	X			
EA/FONSI				
Pharmacology Review(s)	X			
Statistical Review(s)	X			
Microbiology Review(s)				
Clinical Pharmacology Biopharmaceutics Review(s)	X			
Bioequivalence Review(s)				
Administrative Document(s)	X			
Correspondence	X			

CENTER FOR DRUG EVALUATION AND RESEARCH

Application Number: 020280/S008

APPROVAL LETTER

DEPARTMENT OF HEALTH & HUMAN SERVICES

Public Health Service

Food and Drug Administration
Rockville MD 20857

NDA 20-280/S-008

Pharmacia and Upjohn Inc.
Attention: Susan M. Mondebaugh, Ph.D.
Director, Regulatory Affairs
7000 Portage Road
Kalamazoo, MI 49001-0199

OCT 31 1997

Dear Dr. Mondebaugh:

Please refer to your supplemental new drug application dated November 1, 1996, received November 4, 1996, submitted under section 505(b) of the Federal Food, Drug, and Cosmetic Act for Genotropin™ [somatropin (rDNA origin) for injection].

We acknowledge receipt of your submissions dated December 4, 1996, April 30, March 13, May 16, June 2, July 2 and 10, August 14, 15, and 18, and October 31 (fax), 1997. The User Fee goal date for this application is November 4, 1997.

The supplemental application provides for the additional use of Genotropin for long-term replacement therapy in adults with growth hormone deficiency as demonstrated by an appropriate GH stimulation test.

We have completed the review of this supplemental application, including the submitted draft labeling, and have concluded that adequate information has been presented to demonstrate that the drug product is safe and effective for use as recommended in the draft labeling in the submission (fax) dated October 31, 1997. Accordingly, the supplemental application is approved effective on the date of this letter.

The final printed labeling (FPL) must be identical to the draft labeling submitted (fax) on October 31, 1997.

Please submit 20 copies of the FPL as soon as it is available, in no case more than 30 days after it is printed. Please individually mount ten of the copies on heavy-weight paper or similar material. For administrative purposes, this submission should be designated "FINAL PRINTED LABELING" for approved supplemental NDA 20-280/S-008. Approval of this submission by FDA is not required before the labeling is used.

Should additional information relating to the safety and effectiveness of the drug become available, revision of that labeling may be required.

In addition, please submit three copies of the introductory promotional material that you propose to use for this product. All proposed materials should be submitted in draft or mock-

up form, not final print. Please submit one copy to this Division and two copies of both the promotional material and the package insert directly to:

Food and Drug Administration
Division of Drug Marketing, Advertising and Communications, HFD-40
5600 Fishers Lane
Rockville, Maryland 20857

Should a letter communicating important information about this drug product (i.e., a "Dear Doctor" letter) be issued to physicians and others responsible for patient care, we request that you submit a copy of the letter to this NDA and a copy to the following address:

MEDWATCH, HF-2
FDA
5600 Fishers Lane
Rockville, MD 20852-9787

We remind you that you must comply with the requirements for an approved NDA set forth under 21 CFR 314.80 and 314.81.

If you have any questions, please contact Michael F. Johnston, R.Ph., Project Manager, at (301) 827-6423.

Sincerely yours,

/S/ 10/31/97

APPEARS THIS WAY
ON ORIGINAL

Solomon Sobel, M.D.
Director
Division of Metabolic and Endocrine Drug Products (HFD-510)
Office of Drug Evaluation II
Center for Drug Evaluation and Research

cc: Original NDA 20-280
HFD-510/Div. files
HFD-510/SSobel/EGalliers/GFleming/SMalozowski/RSteigerwalt/DHertig/
WBerlin/SMoore/MJohnston
HFD-870/HAhn/RShore
HFD-715/Nevius
HFD-002/ORM (with labeling)
HFD-102/Office Director
HFD-101/L.Carter
DISTRICT OFFICE
HF-2/Medwatch (with labeling)
HFD-92/DDM-DIAB (with labeling)
HFD-40/DDMAC (with labeling)
HFD-613/OGD (with labeling)
HFD-735/DPE (with labeling) - for all NDAs and supplements for adverse reaction changes.
HFI-20/Press Office (with labeling)

APPEARS THIS WAY
ON ORIGINAL

Drafted by: Miohnston10.XX.97/

APPROVAL (AP)

APPEARS THIS WAY
ON ORIGINAL

FINAL PRINTED LABELING HAS NOT BEEN SUBMITTED TO THE FDA.

DRAFT LABELING IS NO LONGER BEING SUPPLIED SO AS TO ENSURE ONLY CORRECT AND CURRENT INFORMATION IS DISSEMINATED TO THE PUBLIC.

CENTER FOR DRUG EVALUATION AND RESEARCH

APPLICATION NUMBER: 020280/S008

CLINICAL PHARMACOLOGY AND BIOPHARMACEUTICS REVIEW(S)

CLINICAL PHARMACOLOGY & BIOPHARMACEUTICS REVIEW

NDA: 20-280/SE1-008	**SUBMISSION DATE (TYPE):**	**11/01/96** **03/13/97 (BB)** **04/30/97 (BB)**
BRAND NAME:	**Genotropin™**	
GENERIC NAME:	**somatropin [rDNA origin] for injection; rhGH**	
REVIEWER:	**Robert M. Shore, Pharm.D.**	
SPONSOR:	**Pharmacia & Upjohn,** **Kalamazoo, MI**	
TYPE OF SUBMISSION:	**Supplement - New or Modified Indication**	

OCT - 9 1997

SYNOPSIS:

Genotropin™ (somatropin [rDNA origin] for injection;rhGH) is currently approved for the long-term treatment of pediatric patients who have growth failure due to an inadequate secretion of endogenous growth hormone. The sponsor is seeking an indication for long-term replacement therapy in adults with GHD of either childhood- or adult-onset etiology. Currently, there are 3 concentrations on the U.S. market: 4 IU/mL, 15 IU/mL, and 36 IU/mL. The 4 IU/mL is neither compositionally nor proportionally identical to the higher strengths; the 15 IU/mL and 36 IU/mL are compositionally similar but not proportional. Pharmacokinetic data in the original approved NDA indicated that the 4 IU/mL and 16 IU/mL formulations were not bioequivalent. There is no data on the bioequivalence of the 36 IU/mL formulation with the other formulations.

Four pharmacokinetic studies were submitted in this supplement. Overall, there is considerable variability in the pharmacokinetics of rhGH. Pharmacokinetic parameters are comparable between healthy adults, AGHD patients, and GHD children. The dose used in the pharmacokinetic studies (0.03 mg/kg) was larger than the highest dose proposed for use in adults (0.01 mg/kg/day). Bioavailability of the SC dose is similar between male and female AGHD patients. Intra-patient variability after repeated administration of rhGH was 15% for AUC_{0-t} and 45% for C_{max}. Two pilot studies demonstrated a lack of bioequivalence between the 4 IU/mL marketed formulation and developmental formulations (8 IU/mL and 32 IU/mL).

RECOMMENDATION:

The Office of Clinical Pharmacology and Biopharmaceutics/Division of Pharmaceutical Evaluation II has reviewed (NDA) 20-280/SE1-008 submitted 11/01/96, 03/13/97, and 04/30/97. The overall Human Pharmacokinetic Section is acceptable to OCPB. Comments (p. 12) and labeling comments (p. 12) should be sent to the sponsor as appropriate.

APPEARS THIS WAY
ON ORIGINAL

Table of Contents **Page**

SYNOPSIS 1
RECOMMENDATION 1
TERMS AND ABBREVIATIONS 3
BACKGROUND 3
PROTOCOL INDEX 4
DRUG FORMULATION 5
ANALYTICAL METHODOLOGY 5
HUMAN PHARMACOKINETICS AND BIOAVAILABILITY STUDIES 7
Bioavailability/Bioequivalence 9
Pharmacokinetics 11
Pharmacokinetic/Pharmacodynamic Relationships 11
COMMENTS 12

To Be Sent to the Sponsor 12
LABELING COMMENTS 12
Appendix 1: Complete Draft Labeling 15
Appendix 2: Study Summaries 29
Appendix 3: Formulation/Batch Information 43
Appendix 4: Assay Performance 53

(Complete Appendices and/or Attachments are available from DPE-II upon request)

APPEARS THIS WAY
ON ORIGINAL

TERMS AND ABBREVIATIONS:

20kD hGH .... 20 kiloDalton variant of human growth hormone which lacks amino acid residues 32-46
AGHD ..... adult growth hormone deficiency
$AUC_{(a-b)}$ ..... area under the plasma drug concentration-time curve from time a to time b
AUMC ..... area under the first moment curve
CI ..... confidence interval
CL ..... plasma clearance
Cmax ..... highest observed drug concentration
CV ..... coefficient of variation
F ..... bioavailability of drug
GHRD ..... growth hormone receptor deficiency
hFSH ..... human follicle stimulating hormone
hGH ..... human growth hormone (22 kD)
hLH ..... human luteinizing hormone
hPL ..... human placental lactogen (chorionic somatomammotropin, hCS)
hPRL ..... human prolactin
hTSH ..... human thyroid stimulating hormone
IM ..... intramuscular
IU ..... international unit (for somatropin 3 IU is approximately 1 mg)
IV ..... intravenous
k ..... elimination rate constant (lambda, λ)
LOD ..... limit of detection
LOQ ..... limit of quantitation
MAT ..... mean absorption time
MRT ..... mean residence time
mU ..... milli-international unit (1/1000 if an international unit)
ND ..... not determined
OCPB ..... Office of Clinical Pharmacology and Biopharmaceutics
PD ..... pharmacodynamic
PK ..... pharmacokinetic
rhGH ..... recombinant human growth hormone (22 kD)
SC ..... subcutaneous
T1/2 ..... apparent terminal half-life in serum
Tmax ..... time at which highest observed drug concentration (Cmax) occurs
Vd ..... apparent volume of distribution
Vss ..... apparent volume of distribution at steady-state

BACKGROUND:

Genotropin™ (somatropin [rDNA origin] for injection) is a polypeptide hormone of recombinant DNA origin. It has 191 amino acid residues and a molecular weight of 22,124 daltons. The amino acid sequence of the product is identical to that of human growth hormone of pituitary origin (somatropin). Genotropin™ is synthesized in a strain of *Escherichia coli* that has been modified by the addition of the gene for human growth hormone. Genotropin™ is a sterile white lyophilized powder intended for subcutaneous injection.

Genotropin™ is currently approved for the long-term treatment of pediatric patients who have growth failure due to an inadequate secretion of endogenous growth hormone. With this efficacy supplement, the sponsor is seeking an indication for long-term replacement therapy in adults with GHD of either childhood- or adult-onset etiology.

The sponsor (formerly Kabi Pharmacia) previously conducted four Biopharmaceutics studies of Genotropin™ rhGH that were included in the original submission (05/15/92) of NDA 20-280. All four studies were conducted

in Sweden and three are briefly summarized below (some information is from the Division of Biopharmaceutics review dated 02/10/94). Study TRN 85-040 used IM dosing with a different formulation and will not be referred to in this review, as the only approved route of administration is SC.

Study TRN 84-025 established that the pharmacokinetic profiles of Genotropin™ rhGH and met-hGH (somatonorm or somatrem; identical to pituitary hGH except for an additional methionine residue at the N-terminal) are similar when both are supplied as 4 IU/mL formulations and injected subcutaneously in healthy adult male volunteers . Each had a bioavailability of approximately 80% when compared to intravenously administered rhGH.

Study TRN 90-053 examined the bioequivalence of the 4 IU/mL and 16 IU/mL Genotropin™ rhGH formulations given by subcutaneous injection to healthy adult male volunteers. The $AUC_{(0-\infty)}$ and C_{max} values were statistically significantly higher (35% and 32%, respectively) for the 16 IU/mL formulation than for the 4 IU/mL formulation. Although the initial reviewer requested that the sponsor submit confidence intervals, none could be found in the responses.

Study TRN 87-050 examined the bioequivalence of the 4 IU/mL and 16 IU/mL Genotropin™ rhGH formulations when given by subcutaneous injection to children with GH deficiency. The C_{max} and $AUC_{(0-\infty)}$ values were higher (29% and 17%, respectively) for the 16 IU/mL formulation than for the 4 IU/mL formulation, but these differences were not statistically significant. Although the initial reviewer requested that the sponsor submit confidence intervals, none could be found in the responses.

From TRN 90-053 and TRN 87-050, the sponsor concluded that the 4 IU/mL and 16 IU/mL formulations are not bioequivalent. The Biopharm review from 02/10/94 does suggest that the medical officer evaluate the two formulations for therapeutic equivalence. However, the approved labeling does not address the issue of interchanging these formulations.

This efficacy supplement, SE1-008, contains four studies to be reviewed by OCPB, all of which included a 4 IU/mL formulation comparable to the U.S. market formulation after reconstitution. There are 6 primary clinical studies conducted in Europe identified by the sponsor to support the proposed indication. All of these clinical studies used a 16 IU/mL formulation

Currently, for somatropin, 3 IU are equivalent to 1 mg. This was changed about 1992, from 2.6 IU/mg.

PROTOCOL INDEX

Protocol Number	Title	Page
CTN 93-0195-002	Bioavailability of subcutaneously injected Genotropin™ 4 IU in growth hormone deficient adults	p.30
CTN 93-0195-001	Intra-individual variation of absorption kinetics of subcutaneously injected Genotropin™ 4 IU in adult growth hormone deficient subjects	p. 33
TRN 90-051 (Pilot Study)	A bioequivalence study of two different formulations of Genotropin™; 4 IU and 32 IU	p. 37
TRN 90-052 (Pilot Study)	A bioequivalence study of two different formulations of Genotropin™; 4 IU and 8 IU	p. 40

DRUG FORMULATION:

The 4 IU cartridge used in the CTN studies is the European market version, which is comparable to the 1.5 mg cartridge U.S. market version. The formulations are the same, both before and after reconstitution. The TRN studies used a formulation that is comparable to the after reconstitution, but the actual product consisted of two vials - one with lyophilized powder and the other with diluent. The 6 primary clinical trials conducted in Europe and submitted in this efficacy supplement used a 16 IU/mL cartridge formulation which is comparable to the U.S. 5.8 mg cartridge. The 8 IU and 32 IU developmental cartridge formulations are not currently marketed in the U.S. There is a 12 mg/mL cartridge and Pen12 unit recently approved (10/23/96) for the U.S. market; this formulation and device are not addressed in this submission. A bioequivalence waiver was submitted on 10/17/96 for this 12 mg/mL formulation, but was not reviewed by OCPB. However, the Chemist's review (dated 10/22/96) does state that in a verbal consultation with Biopharm and the Medical Officer, they indicated that "it is unlikely the increased concentration of rhGH in the formulation will affect the pharmacokinetics of the drug". Table 1 shows the different formulations. Batch information can be found in Appendix 3.

Table 1. Formulations after reconstitution

constituent	concentration per mL					
	1.5 mg cartridge	5.8 mg cartridge	16 IU cartridge (European)	12 mg cartridge	8 IU cartridge	32 IU cartridge
rhGH						
glycine						
mannitol						
sodium dihydrogen phosphate anhydrous						
disodium phosphate anhydrous						
M-cresol						

ANALYTICAL METHODOLOGY:

Table 2. Assay Parameters for GH

Table 3. Assay Parameters for GH

HUMAN PHARMACOKINETICS AND BIOAVAILABILITY STUDIES:

Table 4 summarizes the pharmacokinetic information generated in studies submitted in the approved NDA and Table 5 summarizes the pharmacokinetic data from this efficacy supplement. Studies which were submitted in support of this efficacy supplement are reviewed in the text.

APPEARS THIS WAY
ON ORIGINAL

Table4. Summary of approved NDA mean PK data+

Study No.	Dose (IU/kg)	Conc (IU/mL)	Cmax (mU/L)	Tmax (hr)	t1/2 (hr)	$AUC_{(0-\infty)}$ (mU•hr/L)	Vd[a] (L)	CL[b] (L/min)	Fabs (%)
TRN 84-025 (normal)	0.1 SC	4	53.3 <27>	5.2 <37>	2.0 <58>	513.5[c] <22>	43.0 <62>	0.20 <28>	77
	0.1 IV	4	ND	ND	0.4	668.8[c] <17>	7.2 <64>	0.20 <21>	-
TRN 87-050 (GHD)	0.1 SC	4	50.3	3.5	ND	317	ND	ND	-
	0.1 SC	16	64.7	3.5	ND	370	ND	ND	-
TRN 90-053 (normal)	0.1 SC	4	53.5 <53>	4.1 <27>	ND	285.4 <49>	ND	ND	-
	0.1 SC	16	70.9 <41>	4.0 <28>	ND	384.5 <31>	ND	ND	-

+ Reported as mean <CV%>
a Vd/F for SC; calculated as CL/k.
b CL/F for SC; calculated as Dose/$AUC_{(0-\infty)}$
c As per original NDA review, these values maybe overestimated due to the sampling schedule.

APPEARS THIS WAY ON ORIGINAL

Table 5. Summary of efficacy supplement PK data+

Study No.	Dose (IU/kg)	Conc (IU/mL)	Cmax (mU/L)	Tmax (hr)	t1/2 (hr)	$AUC_{(0-\infty)}$ (mU•hr/L)	Vd[b] (L)	CL[c] (L/min)	Fabs (%)
CTN 93-0195-002	0.1 SC	4	36.9[a] <46>	4.9	1.4 <38>	322.7* <41>	53.4 <77>	0.43 <56>	80.5
	0.05 IV	4	56.5[a] <36>	ND	ND	234.6* <37>	ND	0.33 <49>	-
CTN 93-0195-001	0.1 SC (first)	4	38.3[a] <80>	5.9 <28>	3.0 <48>	382.3[a] <37>	98.0[d,*] <65>	0.38[e] <37>	-
	0.1 SC (second)	4	37.5[a] <40>	6.6 <14>	2.2 <55>	385.3[a] <30>	72.9[d,*] <88>	0.36[e] <46>	-
TRN 90-051	0.1 SC	4	36.2 <53>	4.6 <32>	ND ND	303.5 <32>	ND ND	ND ND	- -
	0.1 SC	32	51.0[f] <37>	4.1 <29>	ND ND	396.6[f] <31>	ND ND	ND ND	- -
TRN 90-052	0.1 SC	4	31.5 <69>	5.7 <33>	ND ND	215.5 <50>	ND ND	ND ND	- -
	0.1 SC	8	28.3[g] <81>	5.1 <34>	ND ND	204.1[g] <59>	ND ND	ND ND	- -

+ Reported as mean <CV%>
a Baseline and dose-adjusted (0.1 IU/kg SC or 0.05 IU/kg IV).
b Vd/F for SC; calculated as CL/k.
c CL/F for SC; calculated as Dose/$AUC_{(0-\infty)}$.
d Reported incorrectly in the NDA.
e Reported as L•kg/hr in the NDA.
f Corrected for actual concentration of 29 IU/mL as per batch certificate
g Corrected for actual concentration of 7.4 IU/mL as per batch certificate
* calculated by reviewer.

I. Bioavailability/Bioequivalence

A. *Absolute Bioavailability*

The objectives of study CTN 93-0195-002 included the estimation of the absolute bioavailability of Genotropin™ rhGH given by subcutaneous administration and the investigation of the pharmacokinetics of rhGH after subcutaneous injection and intravenous infusion. The 4 IU/mL rhGH cartridge formulation was used.

Seventeen male and female patients with GH deficiency, aged and weighing participated in the study. However, only 15 of these patients were included in the pharmacokinetic calculations.

The study design consisted of an open-label subcutaneous injection of rhGH and an intravenous infusion of rhGH given in a randomized crossover sequence with an 8- to 41-day washout period between subcutaneous and intravenous administration. A single subcutaneous rhGH dose of 0.1 IU/kg was injected into the anterior upper lateral part of the right thigh of each patient. A single intravenous rhGH dose of 0.05 IU/kg was given as a 5-hour infusion to each patient. Serum profiles of GH were followed for 24 hours after the start of each rhGH administration. Serum GH concentrations were analyzed with the with

an LOQ of 0.1 mU/L. From the baseline-adjusted serum GH concentration versus time curves, the values of C_{max}, T_{max}, and $AUC_{(0-\infty)}$ were calculated (Table 5).

The SC injection of rhGH 0.1 IU/kg resulted in a mean C_{max} of 36.9 mU/L , and a mean T_{max} of 4.9 hr , . The 5-hour intravenous infusion of rhGH 0.05 IU/kg resulted in a mean C_{max} of 56.5 mU/L

The reported mean±SD $AUC_{(0-\infty)}$/dose for GH resulting from rhGH subcutaneous injection was 48.1±18.8 mU·hr/L and intravenous rhGH infusion was 58.4±19.8 mU·hr/L. However, these parameters were generated by the sponsor; Table 5 includes AUC values, calculated by the reviewer, for comparison to other studies. The estimated bioavailability of rhGH resulting from SC administration was 80.5%, and the 95% confidence interval ranged from 70.5% to 92.1%. This estimate of absolute bioavailability was the same for both genders (80.6% for males [n=7] and 80.5% for females [n=8]). From these results it was concluded that the absolute bioavailability of Genotropin™ 4 IU given by SC administration to adults with GH deficiency is approximately 80%, and is comparable to that of healthy volunteers (Study TRN 84-025).

B. Bioequivalence

Two pilot studies (TRN 90-051 and TRN 90-052) were conducted to examine the bioequivalence between two concentrated formulations (8 IU/mL and 32 IU/mL) and the 4 IU/mL formulation. These two pilot studies were identical in design, with the only difference being the test formulation. Both were two period, randomized, crossover, open-label studies with SC injections of 0.1 IU/kg rhGH, one from the 4 IU/mL vial formulation and one from the test formulation. There was a 1-week washout period between injections. Each study enrolled 24 healthy male subjects. Serum profiles of GH were followed for 12 hours after each rhGH administration. Pharmacokinetic parameters are reported in Table 5. Bioequivalence was evaluated by determining the mean of the log(test/reference) for $AUC_{(0-\infty)}$ and C_{max} for the two formulations, generating the 90% CI, then back-transforming these parameters. The results are in Table 6. Neither the 8 IU/mL nor the 32 IU/mL demonstrated bioequivalence with the 4 IU/mL formulation, with the 8 IU/mL slightly less, and the 32 IU/mL more, bioavailable than the 4 IU/mL

Table 6. Back-transformed Mean Ln(Ratio) and 90% Confidence Intervals for GH parameters

Parameter*	Comparison	Lower Limit	Mean	Upper Limit
$AUC_{(0-\infty)}$	8/4		0.90	
	32/4		1.31	
C_{max}	8/4		0.89	
	32/4		1.54	

* AUC and Cmax values corrected for actual formulation concentrations as per batch certificates.

C. Intra-individual Variability

The objective of study CTN 93-0195-001 was to evaluate the intra-individual variation in the pharmacokinetics of GH after two SC administrations of the same cartridge formulation of Genotropin™ 4 IU, when administered to adult GH deficient subjects.

Seventeen subjects of both sexes with GH deficiency, aged received Genotropin™ 0.1 IU/kg body weight SC twice, with a wash-out period of 7-15 days between injections. Blood samples were drawn

over a period of 30 hours and assayed for serum concentrations of GH and IGF-1.

Table 5 reports the pharmacokinetic parameters. The observed C_{max} for serum GH was reached after about 6 hours The half-life for the declining phase was about 2.6 hours Clearance/F (Dose/AUC) values were calculated over the two periods to 0.37 L/min The apparent MRT was calculated as AUMC/AUC and was reported as 9.6 hours However, calculating MRT in this manner assumes an IV administration and fails to account for the MAT from the SC site of administration, thus giving a falsely large MRT (i.e., MRTtotal = MRTiv + MAT). The Vd values (MRTtotal•CL/F) generated from these MRT were, also falsely large (mean 212 L).

The intra-individual CV% for AUC_{0-t} and C_{max} was estimated to be 15% and 45%, respectively. When the study results were handled as if the two administrations would have been two different formulations, only the variable AUC_{0-t} demonstrated a 90% confidence interval within 0.80-1.25 (Table 7).

Table #. Back-transformed Mean Ln(Ratio) and 90% Confidence Intervals for GH Parameters

Parameter	Lower Limit	Mean	Upper Limit
$AUC_{(0-t)}$		1.04	
C_{max}		1.09	

The serum IGF-I profiles as response to the administered Genotropin™ were similar in period 1 and 2, in each individual; the intra-individual CV for AUC_{0-t} was estimated to be 19% . The maximum concentration observed was on the average 183 ng/mL No correlation between the pharmacokinetics of GH and the pharmacodynamic response of IGF-1 has been explored in this study. However, no data on the IGF-1 assay were submitted.

II. Pharmacokinetics

A. Dose Ranging

As noted in the submission, a study (TRN 87-077/89-020) using a starting dose of about 0.5 IU/kg/week (0.16 mg/kg/week) showed efficacy in AGHD patients, but the side-effect profile suggested that future studies be conducted at a lower dosage regimen. In this study, the mean dose at 12-18 months follow-up was 0.21 IU/kg/week (0.07 mg/kg/week).

The primary clinical studies used a dosage regimen of 0.125 IU/kg/week (0.04 mg/kg/week) for four weeks, after which the dose was increased to 0.25 IU/kg/week (0.08 mg/kg/week). The dose could be individualized in response to side effects.

III. Pharmacokinetic/Pharmacodynamic Relationships

The relationship between GH and IGF-1 was not explored in this submission.

COMMENTS:

LABELING COMMENTS:

The following labeling changes should be sent to the sponsor:

PHARMACOKINETICS
Absorption
Following a 0.03 mg/kg subcutaneous (SC) injection in the thigh of the 1.3 mg/mL GENOTROPIN to adult GHD patients, approximately 80% of the dose was systemically available as compared with that available following intravenous dosing. Results were comparable in both male and female patients. Similar bioavailability has been observed in healthy adult male subjects.

The AGHD data is from study CTN 93-0195-002 of the supplement.

In healthy adult males, following an SC injection in the thigh of 0.03 mg/kg, the extent of absorption (AUC) of a concentration of 5.3 mg/mL GENOTROPIN was 35% greater than that for 1.3 mg/mL GENOTROPIN. The mean (± standard deviation) peak (C_{max}) serum levels were 23.0 (± 9.4) ng/mL and 17.4 (± 9.2) ng/mL, respectively.

These data are from study TRN 90-053 in the approved NDA. As per the Biopharm review of that approved NDA, these Cmax values were 70.9 ± 28.9 mU/L for the 5.3 mg formulation and 53.5 ± 28.4 mU/L for the 1.3 mg formulation. Using 4 IU = 1.3 mg, this reviewer re-calculated the above values.

In a similar study involving pediatric GHD patients, 5.3 mg/mL GENOTROPIN yielded a mean AUC that was 17% greater than that for 1.3 mg/mL GENOTROPIN. The mean C_{max} levels were 21.0 ng/mL and 16.3 ng/mL, respectively.

These data are from study TRN 87-050 in the approved NDA. As per the Biopharm review of that approved NDA, these Cmax values were 64.7 mU/L for the 5.3 mg formulation and 50.3 mU/L for the 1.3 mg formulation. Using 4 IU = 1.3 mg, this reviewer re-calculated the above values.

Adult GHD patients received two single SC doses of 0.03 mg/kg of GENOTROPIN at a concentration of 1.3

mg/mL, with a one- to four-week washout period between injections. Mean C_{max} levels were 12.4 ng/mL (first injection) and 12.2 ng/mL (second injection), achieved at approximately six hours after dosing.

> This data is from study CTN 93-0195-001 of the supplement. The reported mean Cmax values are 38.3 mU/L and 37.5 mU/L for the first and second injection, respectively. The above values were calculated using 4 IU = 1.3 mg.

There is no data on the bioequivalence between the 12 mg/mL formulation and either the 1.3 mg/mL or the 5.3 mg/mL formulations.

> No *in vitro* nor *in vivo* data has been submitted that would address bioequivalence between the 12 mg/mL formulation and the two lower strength formulations.

Distribution

The mean volume of distribution of GENOTROPIN following administration to GHD adults was estimated to be 1.3 (± 0.8)

> The volume calculation submitted in the supplement was incorrect (i.e., it assumed an IV bolus dose) and this reviewer re-calculated these values from the first period of study CTN 93-0195-001.

Metabolism

The metabolic fate of GENOTROPIN involves classical protein catabolism in both the liver and kidneys. In renal cells, at least a portion of the breakdown products are returned to the systemic circulation. The mean terminal half-life of intravenous GENOTROPIN in normal adults is 0.4 hours, whereas subcutaneously administered GENOTROPIN has a half-life of 3.0 hours in GHD adults. The observed difference is due to slow absorption from the subcutaneous injection site.

> For the IV dose, the 0.4 hr is from study TRN 84-025 which included only normal adults. There were no calculations submitted for the half-life of the IV dose from study CTN 93-0195-002 in AGHD. For the SC half-life, the data is from the first period of study CTN 93-0195-001 in AGHD.

Excretion

The mean clearance of subcutaneously administered GENOTROPIN in 16 GHD adult patients was 0.3 (± 0.11) L/hrs/kg.

Special Populations

Pediatric: The pharmacokinetics of GENOTROPIN are similar in GHD pediatric and adult patients.

Gender: No gender studies have been performed in pediatric patients; however, in GHD adults, the absolute bioavailability of GENOTROPIN was similar in males and females.

Race: No studies have been conducted with GENOTROPIN to assess pharmacokinetic differences among races.

Renal or hepatic insufficiency: No studies have been conducted with GENOTROPIN in these patient populations.

Table 1
Mean SC pharmacokinetic parameters in adult GHD patients

	Bioavailability (%) (N = 15)	T_{max} (hours) (N = 16)	CL/F (L/hr x kg) (N = 16)	Vss/F (L/kg) (N = 16)	$T_{½}$ (hours) (N = 16)
Mean (± SD)	80.5 *	5.9 (± 1.65)	0.3 (± 0.11)	1.3 (± 0.80)	3.0 (± 1.44)
95% CI	70.5 - 92.1	5.0 - 6.7	0.2 - 0.4	0.9 - 1.8	2.2 - 3.7

T_{max} = time of maximum plasma concentration
CL/F = plasma clearance
Vss/F = volume of distribution
$T_{½}$ = terminal half-life
SD = standard deviation
CI = confidence interval

* The absolute bioavailability was estimated under the assumption that the log-transformed data follow a normal distribution. The mean and standard deviation of the log-transformed data were mean = 0.22 (± 0.241).

All parameters in Table 1 are from the first period of study CTN 93-0195-001 except for the bioavailability which is from study CTN 93-0195-002.

Robert M. Shore, Pharm.D.
Division of Pharmaceutical Evaluation II
Office of Clinical Pharmacology and Biopharmaceutics
DATE

/S/ 10/09/97

RD initialed by Hae-Young Ahn, Ph.D., Team Leader 09/14/97

FT initialed by Hae-Young Ahn, Ph.D., Team Leader /S/ 10/9/97

cc: NDA 20-280/SE1-008 (orig., 1 copy), HFD-510(Malozowski, Johnston, Hertig, Berlin), HFD-340 (Vishwanathan), HFD-870(Shore, Ahn, M.Chen), CDR (Barbara Murphy).

"CM"

APPEARS THIS WAY ON ORIGINAL

CENTER FOR DRUG EVALUATION AND RESEARCH

APPLICATION NUMBER: 020280/S008

MEDICAL REVIEW(S)

Group Leader's Note

Genotropin (Somatropin)
for GH deficiency in adults

NDA 20-280
Pharmacia UpJohn

October 27, 1997

This is the second NDA for the indication of growth hormone deficient adults. The major issues involved in the review of this indication are addressed by the following questions:

1. Is there plausibility for treating GH adult deficient subjects?

Abundant evidence supports that adults who had GH deficiency as children have subnormal muscular strength, exercise tolerance, and psychosocial adjustment. Less evidence is available for adults who acquired GHD in adulthood because of organic hypothalamic- pituitary disease. Only two of the pivotal studies in this NDA were designed to demonstrate functional, i.e., treadmill performance, benefit, and no effect was found in either study. Early trial -020 did show an effect with a larger dose, but the safety profile was judged unacceptable. We can presume that actual patient benefits beyond body composition effects probably occur with GH therapy, but this has not been shown demonstrated in this NDA.

2. Has the appropriate population of subject been identified?

The sponsor took a practical, but less defined approach in identifying GHD with one of several standard GH stimulation tests. This approach should not be a problem for congenital GHD, but some tests such as GHRH and arginine stimulation have a fairly high false positive rate in the general adult population. In some cases, adults with a history of hypothalamic-pituitary disease may nonetheless have intact GH secretion despite an abnormal stimulation test. Consistent use of the insulin tolerance test (ITT) would have reduced the number of false positive diagnoses, but it is a hazardous and somewhat impractical procedure for routine use. From the standpoint of overestimating efficacy in the controlled studies, the high false positive rate for some of these tests is not a problem because their effect would be to reduce efficacy.

As in the previous NDA, the sponsor appropriately avoided subjects with GH hyposecretion unassociated with organic hypothalamic-pituitary disease. It has been established that GH secretion progressively declines with age. By the seventh decade

most normal adults will fail to respond to an ITT. An even greater number will fail to respond to other tests. IGF-1 levels also decline, but the correlation with ITT response is only partial. The clinical significance of this much more widespread condition is very controversial, and there are no data to justify treating such persons with GH. It is hoped that physicians will not be confused by this indication into treating them until data are provided that would support such treatment.

3. *Is the dose regimen appropriate?*

The sponsor arrived at the single dosage used in these studies by considering the results of smaller studies. In particular, the study mentioned above clearly resulted in unacceptable adverse connective tissue reactions. Though formal long term dose response studies were not performed by the sponsor, the recommended dose appears to be about right in terms of IGF-1 responses. The recommendation for dose adjustment is somewhat imprecise but as good as available data allow.

4. *Is there a means of identifying responders and non-responders prospectively and/or during treatment?*

Any category of adult patients may require dosage reductions due to edema or connected tissue symptoms though it appears that downward adjustments are more likely for the obese and the older patients and upward adjustments in the weight normalized dosage may be more likely for women. Physicians might logically assume that they can rely on IGF-1 levels particularly to adjust dosage downward but symptoms and signs should also be taken into account as is reflected in the labeling.

5. *Is the proposed labeling as revised adequate?*

Yes, except for the lack of specification of the period of time over which the dose should be titrated upward. Since the approach that was taken in the trials was to adjust at four weeks this should be added but to be conservative a band should be given, i.e., 4-8

APPEARS THIS WAY
ON ORIGINAL

Conclusions and Recommendations:

The sponsor had adequately demonstrated an acceptable benefit/risk relationship for GH treatment of adults with both the adult acquired and childhood forms of GH deficiency. The final drug product labeling contains the important information necessary for

physicians to identify appropriate subjects and treat them safely and effectively, within the limits of the therapy's efficacy.

I recommend that the NDA be approved.

/S/ 10/30/97

APPEARS THIS WAY
ON ORIGINAL

Alexander Fleming, M.D.

10/30/97

/S/

cc:
HFD-510
/NDA 20-280
/S.Sobel, S.Malozowski, E. Galliers

APPEARS THIS WAY
ON ORIGINAL

Index

	Page
Section One	
Introduction	
1. Introduction	1
2. Clinical Program Overview	3
3. Table of all Studies and Design of Studies	7
4. Population Description	9
5. Methods	16
6. Body Composition	19
7. Muscle Strength	22
8. Exercise Capacity	22
9. Cardiovascular Function	23
10. IGF-I	24
11 Subpopulation Body Composition by sex	25
12. Rationale for Dose Selection	26
Section Two	
Study 91-081-01	
1. Objectives	1
2. Patients, Materials and Methods	1
3. Results	3
4. Study Drugs	4
5. Efficacy	6
6. Safety	10
7. Discussion	21
8. Conclusion	22
Section Three	
Study 91-001	
1. Objectives	1
2. Patients, Materials and Methods	1
3. Results	4
4. Concomitant therapy	5
5. Efficacy	6
6. Safety	9
7. Discussion	13
8. Conclusion	14
Section Four	
Study 91-081-02	
1. Objectives	1
2. Patients, Materials and Methods	1
3. Results	5

4. Efficacy 9
5. Safety 13
6. Discussion 22
7. Conclusion 24

Section Five
Study 91-131-04
1. Objectives 1
2. Patients, Materials and Methods 1
3. Results 3
4. Efficacy 8
5. Safety 14
6. Discussion 22
7. Conclusion 24

Section Six
Study 91-131-08
1. Objectives 1
2. Patients, Materials and Methods 1
3. Therapy 3
4. Efficacy 9
5. Safety 14
7. Discussion 18
8. Conclusion 19

Section Seven
Study 92-8124-011
1. Objectives 1
2. Patients, Materials and Methods 1
3. Efficacy 5
4. Safety 9
5. Discussion 15
6. Conclusion 16

Section Eight
Summary and Recommendations
Summary and Recommendations 1

APPEARS THIS WAY
ON ORIGINAL

Section One

Introduction

APPEARS THIS WAY
ON ORIGINAL

1.0 INTRODUCTION

Pharmacia & Upjohn AB (Pharmacia) is submitting this supplement to NDA 20-280 for the use of recombinant human growth hormone (rhGH) as replacement therapy in adult growth hormone deficiency (AGHD). The information provided is to support the following initiation and dosing regimen:

> ***Genotropin is indicated for long-term replacement therapy in adults with GHD of either childhood- or adult-onset etiology. GHD should be confirmed by an appropriate growth hormone stimulation test.***
>
> ***The dosage of Genotropin must be adjusted for the individual patient. The recommended dosage at the start of therapy is not more than 0.04 mg/kg/week. The dose may be increased according to individual patient requirements to a maximum of 0.08 mg/kg/week, depending upon patient tolerance of treatment. It may be necessary to decrease the dose for patients who are older or obese.***

Most of the information presented in this review was taken directly from the sponsor submission. The outcomes, the analysis of the data and the interpretation of these results are not. Like other hormone deficiency states, growth hormone (GH) deficiency in adulthood is now recognized as a clinical entity. Hypopituitary patients who receive conventional triple-hormone replacement therapy with corticosteroids, thyroxine and sex hormones, and who are severely deficient in GH, have several characteristic features, such as increased abdominal fat mass, decreased lean body mass and dehydration. Similar patients, who also receive replacement therapy with GH, benefit from decrease in fat mass, increase in lean body mass, increase in total body water. These changes, which are the most apparent ones occurring early during treatment, reflect the lipolytic, anabolic and antinatriuretic actions of GH. Emerging information in the medical literature suggests that by continuing GH treatment the overall effect of body composition is maintained. Improvements in cardiac function and bone mass have also been reported comparing baseline values to GH exposure after 12 months, but these studies were not properly controlled.

To date, data are available from 51 clinical trials which have been conducted by Pharmacia in 1145 patients diagnosed with AGHD. In Pharmacia trials, 573 patients were randomized to receive Genotropin, and 572 were randomized to receive placebo. The Phase III trials were designed with an initial double-blind, placebo-controlled treatment period followed by an open-label extension treatment period in which all patients received Genotropin. The planned duration of study drug treatment ranged up to 18 months.

Based on the sponsor's evaluation of all the clinical trials sponsored by Pharmacia including a GCP inspection and identification of endpoints of special interest to FDA, six trials have been designated as primary placebo-controlled clinical trials. The sponsor considers all six trials to be scientifically sound and demonstrate the efficacy of Genotropin treatment in patients with AGHD.

Although some of these trials include endpoints which evaluate functional improvement, it is important to note that, **aside from body composition, none of the functional endpoints is statistically significant at the end of 6-month, double-blind treatment**. An early trial performed by Sönksen (TRN 87-077/89-020) at a higher dose (the dose usually selected for treatment of pediatric growth hormone deficiency) demonstrated an improvement in body composition along with improvement in functional measures at the end of 6-month, double-blind treatment. The results of this trial were first published in the New England Journal of Medicine in 1989. A statistically significant and clinically important improvement was observed for the Genotropin-treated patients compared to the placebo patients for many parameters including the following:

- lean body mass
- fat mass
- total body water
- maximal exercise performance
- muscle strength
- stroke volume
- left ventricular end diastolic dimension

Laboratory changes included

- total cholesterol
- LDL-cholesterol
- LDL:HDL-cholesterol ratio

Although efficacy was demonstrated in this trial, **the side effect profile suggested that future trials be conducted at a lower dosage regimen**. This information was used to select the dosage regimen for the Pharmacia Phase III trials, however, the results of this study are not part of the six pivotal studies.

The cutoff date for completed trials and trials for clinical trial efficacy data is June 30, 1995 and the cutoff date for the literature is August 31, 1995.

The data provided in this submission demonstrate the benefits of GH replacement therapy in adults with GH deficiency. This concept is consistent with the success of hormone replacement therapy in patients with other hormone deficiencies, such as thyroid hormone.

2.0 CLINICAL PROGRAM OVERVIEW

The extent of the clinical trial program necessitated grouping the studies into different categories:

- Completed Primary Trials,
- Other Completed Trials,
- Trials with Final Data File, and
- Ongoing Trials with 12-Month Data.

The above groups of trials include data from 1145 patients. Moreover, an additional 1886 patients are participating in other ongoing trials. This total of 3031 patients does not include the patient exposure from ongoing investigator-sponsored trials and the compassionate use program.

A completed trial is defined as a trial for which there is a Pharmacia-approved trial report. Ongoing trials include studies which meet the following criteria: the data file is final (clean file), the efficacy data have not been analyzed by Pharmacia and the efficacy data are not reported in the literature.

2.1 Prototype Clinical Trial Design

Most of the trials had the same study design. Patients were randomized to receive either Genotropin or placebo during a 6-month, double-blind study period. This period was followed by an open-label period of varying length in which all the patients received Genotropin. Trials were prospectively designed to have the study medication code broken after all patients had completed the 12-month core protocol. However, in some trials, the code was broken after all the patients had completed the 6-month, double-blind period. In several studies the patients continued their treatment in open-label extension after this period. Figure 1 depicts the design of these studies.

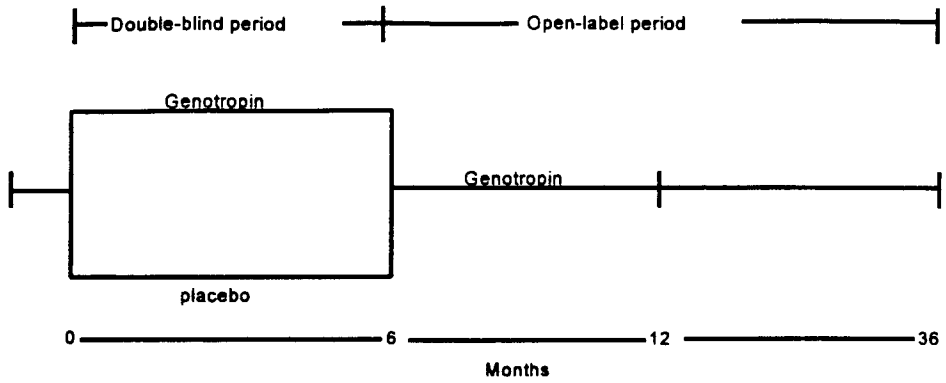

Figure 1. Prototype trial design with a 12-month core protocol.

In most of the trials, a starting dose of 0.0375 mg/kg/week for four weeks was used, after which the dose was increased to 0.75 mg/kg/week. This dose regimen was repeated for all patients after the double-blind placebo-controlled study period. The Genotropin dose administered could be individualized due to side effects. In addition, studies were performed to document pharmacological effects, pharmacokinetics and bioavailability of Genotropin in GH-deficient adult patients, and also to document the relationship between different doses and circulating levels of insulin-like growth factor I (IGF-I) and one of its binding proteins, IGF-BP3.

Each primary trial consisted of a parallel, randomized, 6-month, double-blind placebo-controlled treatment period followed by a 6-month, open-label Genotropin treatment period. Trials TRN 91-001/CTN 92-8124-016, TRN 91-081-01/CTN 92-8124-015, and TRN 91-081-02/CTN 93-8124-019 also included an additional open-label Genotropin treatment period of 12 months for the growth hormone treatment group and 18 months for the former placebo treatment group, to provide a total of 24 months of Genotropin treatment for each group. The efficacy review will be centered on the double blind section and the safety review will include all data available.

2.2 Phase III Protocol Admission Criteria

The protocol admission criteria for the phase III trials were as follows:

Inclusion Criteria

- GH deficiency (isolated or as part of hypopituitarism) likely to have existed for at least 24 months prior to inclusion.
- Stimulated maximum peak GH response less than 5 µg/L. Acceptable stimulation tests were arginine, glucagon, clonidine and insulin-induced hypoglycemia. Tests performed within five years prior to inclusion and after 20 years of age were accepted.
- Age
- Patients with multiple pituitary hormone deficiency on stable replacement therapy for at least 6 months.
- Informed consent obtained.

Exclusion Criteria

- Treatment with growth hormone during the last 12 months.
- Acute severe illness during the last 6 months.
- Pregnancy (to be excluded with test).
- Chronic severe liver disease (gamma-GT and/or ASAT (SGOT) and/or ALAT (SGPT) twice the upper limit of the normal range laboratory value.
- Chronic severe renal disease (S-creatinine higher than 120 micromoles/L or repeated positive test for hematuria or proteinuria).
- Supine blood pressure higher than 160 mm Hg systolic or higher than 100 mm Hg diastolic.
- Diabetes mellitus (Type I or II).
- History of malignancy (patients treated for cranial tumors or leukemia causing GH deficiency were accepted).

- Chronic medication, except pituitary replacement therapy, bromocriptine, contraceptives, and treatment of mild hypertension and mild asthma.

- Suspected non-cooperativeness.

- Known/suspected hypersensitivity to m-cresol.

2.3 Completed and Ongoing Trial Classification

In this summary, the efficacy results from growth hormone-deficient hypopituitary patients treated with Genotropin were derived from the clinical investigations listed in Table 1 and the literature.

Table 1. Trial classification

	Total		Studies with reports		Studies reported with ongoing extensions		Ongoing studies	
Type of trials	Number of Trials	Number of Centers	Number of Trials	Number of Centers	Number of Trials	Number of Centers	Number of Trials	Number of Centers
Multicenter	9	55	7	43	0	0	2	12
Multiple Independent	14	125	12	118	8	12	10	19
Single Center	28	28	14	14	0	0	14	14
Total	51	208	33	175	8	12	26	45

The six completed primary trials are listed in Table 2.

APPEARS THIS WAY
ON ORIGINAL

Table 2. Completed primary trials

Protocol/Report	Principal investigator/ Country	Number of patients enrolled	Double-blind (N)		All Genotropin (N)
			Genotropin	Placebo	
TRN 91-081-01/ CTN 92-8124-015 95 10 756	Rosen Sweden	25	12	13	25
TRN 91-081-02/ CTN 93-8124-019 95 10 679	Bramnert Sweden	23	12	11	23
TRN 91-001/ CTN 92-8124-016 95 10 410	Thoren Sweden	20	10	10	20
TRN 91-131-04 93 96 415	Monson/ Shalet UK	32	14	18	30
TRN 91-131-08 95 10 680	Monson/ Besser/Ross UK	52	27	25	52
CTN 92-8124-011 93 96 416	Holdaway New Zealand	20	10	10	19

3.0 TABLE OF ALL STUDIES AND DESIGN OF STUDIES

The abbreviations for the Table of All Studies are listed in Table 3.

APPEARS THIS WAY
ON ORIGINAL

Table 3. Table of all studies: Abbreviations

Section	Abbreviation
General	NA = Not available NAP= Not applicable
Type of Study and Control(s)	PD = Pharmacodynamic PC = Placebo Control
Study Design	DB = Double blind OL = Open label OE = Open-label extension R = Randomized PG = Parallel Group CO = Crossover NV = Normal volunteer control group
Duration of Dosing	W = Week(s) M = Month(s)

APPEARS THIS WAY
ON ORIGINAL

4.0 POPULATION DESCRIPTION

4.1 Demographic Characteristics

Demographic characteristics at baseline for the primary trials and all trials are presented in Table 4.

Table 4. Demographic characteristics for the primary trials and all trials

	Primary trials				All trials			
	Genotropin N=85		Placebo N=87		Genotropin N=573		Placebo N=572	
Characteristic	n	%	n	%	n	%	n	%
Sex								
Male	44	51.8	57	65.5	321	56.0	310	54.2
Female	41	48.2	30	34.5	252	44.0	262	45.8
Age (years)								
Mean±SD	42.4±10.6		41.4±10.9		40.5±11.9		39.7±12.4	
Range								
Weight (kg)								
Mean±SD	79.8±19.2		77.8±16.8		78.0±20.0		76.4±18.1	
Range								
Height (cm)								
Mean±SD	168±11		169±9		167±11		167±11	
Range								
Body Mass Index (BMI)								
Mean±SD	28.2±6.2		27.2±4.6		27.8±5.8		27.4±5.3	
Range								

APPEARS THIS WAY
ON ORIGINAL

Table 4. Demographic characteristics for the primary trials and all trials

	Primary trials				All trials			
	Genotropin N=85		Placebo N=87		Genotropin N=573		Placebo N=572	
Characteristic	**n**	**%**	**n**	**%**	**n**	**%**	**n**	**%**
Ethnic origin								
Caucasian	83	97.6	85	97.7	514	89.7	512	89.5
Black	0	0.0	0	0.0	3	0.5	2	0.3
Oriental	0	0.0	0	0.0	4	0.7	3	0.5
Other	2	2.4	2	2.3	3	0.5	4	0.7
Not asked for/not available	0	0.0	0	0.0	49	8.6	51	8.9

a) Includes primary trials.

The demographic characteristics at randomization for patients receiving Genotropin or placebo were similar for the primary trials and all trials. Patients were on the average approximately 40 years of age and the overwhelming majority were Caucasian. There were slightly more males than females in the trials.

The etiology of growth hormone deficiency for patients in the primary trials and all trials is presented in Table 5.

APPEARS THIS WAY
ON ORIGINAL

Table 5. Etiology of growth hormone deficiency for patients in the primary trials and all trials

	Primary trials				All trials[a]			
	Genotropin N=85		Placebo N=87		Genotropin N=573		Placebo N=572	
Etiology	**n**	**%**	**n**	**%**	**n**	**%**	**n**	**%**
Pituitary tumor	54	63.5	51	58.6	299	52.2	277	48.4
Craniopharyngiomas	12	14.1	15	17.2	69	12.0	84	14.7
Idiopathic causes	4	4.7	9	10.3	66	11.5	77	13.5
Trauma	2	2.4	1	1.1	11	1.9	11	1.9
Other causes	13	15.3	11	12.6	108	18.8	104	18.1
Information not available	0	0.0	0	0.0	20	3.5	19	3.3

a) Includes primary trials.

In both the primary trials and all trials, the etiology of the patients' growth hormone deficiency was most often pituitary tumor followed by craniopharyngioma.

4.2 Diagnostic Criteria - International Consensus Conference October 1994

Previously, the diagnosis of AGHD had been readily established based upon peak growth hormone response to provocative stimuli. Diagnosis of this condition was based upon demonstration of an abnormally low plasma level of growth hormone in the presence of associated clinical signs and symptoms.

AGHD was defined has having:

- Known hypothalamic-pituitary disease
- ITT peak GH response < 3 µg/L

In both the primary trials and all trials, the most frequently used stimulation test was the insulin tolerance test.

The stimulation test results are displayed in Table 6.

Table 6. Stimulation test results

	Primary trials				All trials[a]			
	Genotropin N=85		Placebo N=87		Genotropin N=573		Placebo N=572	
Stimulation test result	**n**	**%**	**n**	**%**	**n**	**%**	**n**	**%**
GH peak <3 μg/L	74	87.1	82	94.3	525	91.6	526	92.0
GH peak ≥3, <5 μg/L	11	12.9	5	5.7	42	7.3	37	6.5
GH peak ≥5, <8 μg/L	0	0.0	0	0.0	2	0.3	6	1.0
GH peak ≥8 μg/L	0	0.0	0	0.0	1	0.2	2	0.3
Results not available	0	0.0	0	0.0	3	0.5	1	0.2

a) Includes primary trials.

Ninety-two percent of 1145 patients in all trials and 91% of 172 patients in the primary trials had a maximum growth hormone concentration less than 3 μg/L. Thus, a vast majority who participated in the trials fulfilled the diagnostic criteria of profound growth hormone deficiency.

Adult onset is defined as onset of growth hormone deficiency in patients who were greater than 17 years of age.

Baseline characteristics of growth hormone deficiency for the primary trials and all trials are presented in Table 7.

APPEARS THIS WAY
ON ORIGINAL

Table 7. Baseline characteristics of growth hormone deficiency for primary trials and all trials

Characteristic	Primary trials				All trials[a]			
	Genotropin N=85		Placebo N=87		Genotropin N=573		Placebo N=572	
	n	%	n	%	n	%	n	%
Isolated GH deficiency/ Multiple hormone deficiency								
Isolated GH deficiency	13	15.3	14	16.1	74	12.9	77	13.5
Multiple pituitary hormone deficiency	72	84.7	73	83.9	493	86.0	486	85.0
Information not available	0	0.0	0	0.0	6	1.0	9	1.6
Adult/Childhood onset of GH deficiency								
Adult onset (> 17 years of age)	73	85.9	73	83.9	447	78.0	429	75.0
Childhood onset (≤ 17 years of age)	12	14.1	14	16.1	102	17.8	119	20.2
Information not available	0	0.0	0	0.0	24	4.2	24	4.2

a) Includes primary trials.

A majority of the patients had multiple pituitary hormone deficiency, and a majority had acquired their deficiency during adult life.

The etiology by onset of growth hormone deficiency for the primary trials is provided in Table 8.

APPEARS THIS WAY
ON ORIGINAL

Table 8. Etiology by onset of growth hormone deficiency for the primary trials

	Isolated GH deficiency				Multiple pituitary hormone deficiency			
	Adult onset N=21		Childhood onset N=6		Adult onset N=125		Childhood onset N=20	
Etiology	**n**	**%**	**n**	**%**	**n**	**%**	**n**	**%**
Pituitary Tumor	14	66.7	0	0.0	90	72.0	1	5.0
Craniopharyngioma	1	4.8	0	0.0	16	12.8	10	50.0
Idiopathic causes	0	0.0	4	66.7	3	2.4	6	30.0
Trauma	0	0.0	0	0.0	2	1.6	1	5.0
Other causes	6	28.6	2	33.3	14	11.2	2	10.0
Not available	0	0.0	0	0.0	0	0.0	0	0.0

As displayed in Table 8, the most common etiology of both multiple pituitary hormone deficiency and isolated growth hormone deficiency for adult onset patients in the primary trials was pituitary tumor.

As in the primary trials, most patients in all trials had multiple pituitary hormone deficiency, usually of adult onset. The most common etiology of both multiple pituitary hormone deficiency and isolated growth hormone deficiency for adult onset patients in all trials was pituitary tumor.

A majority of the patients had a deficiency of pituitary hormones in addition to growth hormone as displayed in Table 9.

APPEARS THIS WAY
ON ORIGINAL

Table 9. Deficiency of other pituitary hormones in addition to growth hormone for primary trials and all trials

	Primary trials				All trials[a]			
	Genotropin N=85		Placebo N=87		Genotropin N=573		Placebo N=572	
Deficiency	n	%	n	%	n	%	n	%
TSH	62	72.9	57	65.5	399	69.6	395	69.1
ACTH	59	69.4	59	67.8	394	68.8	376	65.7
Gonadotropin	68	80.0	68	78.2	437	76.3	437	76.4
ADH	17	20.0	17	19.5	125	21.8	133	23.3

a) Includes primary trials.

In both the primary trials and all trials, gonadotropin deficiency was the most common pituitary deficiency other than growth hormone. However, TSH and ACTH deficiency also occurred frequently.

4.3 Patient Disposition

The patient disposition in the primary trials and all trials for 0-6 months is presented in Table 10.

Table 10. Patient disposition in the primary trials and all trials

Trial Classification	Enrolled	Double-blind		Complete		Withdrawn	
		Genotropin	Placebo	Genotropin	Placebo	Genotropin	Placebo
Primary trials	172	85	87	78	84	7	3
All trials[a]	1145	573	572	516	537	57	35

a) Includes primary trials.

Of the 172 patients enrolled in the primary trials, 78 patients have completed the double-blind Genotropin treatment study period, 84 patients have completed the double-blind placebo treatment study period, and 10 patients were prematurely

terminated. Of the 1145 patients enrolled in all of the trials, 516 patients have completed the double-blind Genotropin treatment study period and 537 patients have completed the double-blind placebo treatment study period. Of the 1145 patients enrolled in all of the trials, 952 patients have completed the 6-12 month study period, 106 patients have completed the 12-18 month study period, and 192 patients have completed the 12- to 24-month study period.

5.0 METHODS

The data from all of the clinical trials and the literature were reviewed and evaluated. This section summarizes the evaluation of the methods used to measure the efficacy endpoints, a description of the databases which identify the location of information on specific topics and the actual results. Studies were performed at baseline and at fixed intervals. These intervals are described in detail in each study.

5.1 Endpoints

The endpoints evaluated in the clinical trials include both the signs and symptoms of AGHD.

The trials were designed to evaluate the signs of AGHD which include the following:

- Abnormal body composition
  - Increased fat mass,
  - Decreased lean body mass, and
  - Decreased total body water;
- Reduced muscle strength;
- Reduced exercise capacity;
- Decreased bone mass (osteopenia); and
- Increased cardiovascular risk factors (lipid metabolism).

The clinical program was not designed to collect the data to identify whether or not there was a clinically important functional improvement along with normalization of body composition and improvement in symptoms.

The parameters of interest and the endpoint variables for the completed trials that have been abstracted are listed in Table 11.

Table 11. Summary of endpoints abstracted

Parameter	Endpoint
Body composition	Fat mass Lean body mass Total lean body mass Trunk lean mass Trunk fat Lean/fat ratio Total body water
Functional measurements/Muscle strength	Muscle Strength: Quadriceps Isometric Muscle Force: Hip flexion Isometric Muscle Force: Hip extension Muscle function: Leg (quadriceps) Isometric muscle strength: Quadriceps Muscle strength: Hip abduction
Exercise capacity	Exercise performance Exercise performance, maximal Exercise performance, submaximal Work capacity Exercise capacity Exercise tolerance Maximum work load Heart rate
Pulmonary function	Ventilation volume Oxygen consumption Maximum oxygen uptake
Cardiovascular function	Left ventricular wall thickness Left ventricular wall mass Left ventricular mass (LVM) Left ventricular myocardial mass Ventricular mass Posterior wall thickness (PWTs) Stroke volume Cardiac output

APPEARS THIS WAY
ON ORIGINAL

5.2 Clinical Measurement

The methods used clinically to measure body composition, muscle function, exercise capacity, and cardiovascular function are summarized and described in the text and tables.

5.3 Data Organization

The study design and dosing information was collected for each trial.

A list of parameters generated from review of the reports and the publications was divided into primary and secondary parameters. All of the reports and publications were coded for information on the primary and secondary parameters. For the primary parameters, all the data for each time point were abstracted for presentation in this summary. The data for the secondary parameters were reviewed. The sponsor defined the clinically beneficial direction of change associated with each parameter.

For each parameter, in addition to the units and the method of measurement, the summary statistics (number of patients, mean, median, standard error, standard deviation, minimum and maximum) were collected for the baseline and each time point (duration of growth hormone treatment) and change from baseline for each treatment group. The results of the statistical analyses were abstracted for between and within treatment group comparisons. This included the statistical test used to evaluate treatment differences, the p-value, the direction of change from baseline, and the group favored for the between treatment analysis. Clinical improvement, as assessed by the investigator, also was abstracted.

6.0 BODY COMPOSITION

6.1 Measurements of Body Composition

Many procedures have been developed over the years for the determination of body composition (BC). Most of these have involved the determination of a known relatively constant parameter of a body compartment. The remaining parameters are then extrapolated from assumed relationships where objective measurement is not possible. Thus, these methods have a high degree of subjectivity. The procedures used in the six primary clinical trials evaluating the effects of growth hormone (GH) are shown in Table 12.

Table 12. Body composition: Methods of measurement

Methods	Study
Dual x-ray absorptiometry (DEXA)	TRN 91-001/CTN 92-8124-016, TRN 91-081-02/CTN 93-8124-019, TRN 91-131-04, TRN 91-131-08, CTN 92-8124-011
Two-compartment model with bioelectrical impedance analysis (BIA)	TRN 91-001/CTN 92-8124-016, TRN 91-081-01/CTN 92-8124-015, TRN 91-081-02/CTN 93-8124-019
Four-compartment model	TRN 91-081-01/CTN 92-8124-015, TRN 91-081-02/CTN 93-8124-019
Two-compartment potassium	TRN 91-081-02/CTN 93-8124-019

These techniques are compared in outline form in Table 13.

Table 13. Body composition: Comparison of methods of measurement

Methods	Validity
DEXA	Proven procedure for bone density.
CT	Well accepted and recognized method.
Two-compartment (BIA) and four-compartment models	Generally recognized and accepted. Objective measure of one component (in two-compartment model) and two components (in four-compartment model). Well accepted extrapolations.

6.1.1 DEXA

Transmission of energy through body tissues varies with the composition and density of each component. In this method, the energy is x-radiation produced by two monoenergic sources. The difference in transmission of energy then is used to calculate the composition. The original use of this technique was for the measurement of bone density of both peripheral and spinal locations. This is then adapted for either whole body, trunk, and/or peripheral limb measurement of other body components.

6.1.2 BIA

The Bioelectrical Impedance Analysis (BIA) method relies on the difference in electrical conductivity of fat-free mass in lean body mass and fat mass. In general, body fluids are responsible for electrical conduction and the cell membranes determine capacitance. The impedance can be divided into its geometrical components: resistance and reactance. In BIA, the resistance and reactance are measured by tetrapolar devices, which are now portable. BIA is used to calculate lean body mass and, thus, body fat and total body water in the two-compartment model on the basis of regression equations using anthropometric and BIA variables.

6.1.3 Computerized Tomography (CT)

Transmission of energy from x-radiation delineates specific body components in this technique. It is generally used in the thigh where areas of specific components can be delineated and compared to the total area surveyed.

6.1.4 Two-Compartment Model

In this technique the body fat (BF) and lean body mass (LBM) are calculated from the determination of the total body water (TBW) or the total body potassium (TBK). This assumes that the composition of the LBM remains constant and if potassium (K) is used for the calculation it assumes that intracellular K also remains constant. Total body water (TBW) is measured by bioelectric impedance (BIA) where a small electric current is passed through the body and a difference in transmission of current is seen between BF and LBM. TBW can also be determined from the measurement of K by whole body counting of the gamma radiation of naturally present K-40.

6.1.5 Four-Compartment Model

This technique involves the simultaneous measurement of TBW, TBK, and body weight (BW); from these the fat free extracellular solids (FFECS), the body cell mass (BCM), extracellular water (ECW), and BF are calculated as follows:

- BCM (kg) = $8.33 \times 10^{-3} \times$ TBK(mmol)
- Intracellular water (ICW)(kg) = 0.75 x BCM(kg)
- ECW (kg) = TBW(kg) - ICW(kg)
- FFECS (kg) = 0.12 BW_{norm}
- BF (kg) = BW - (BCM + ECW + FFECS)

Fat-free mass (or lean body mass) is the sum of BCM, ECW and FFECS.

BCM is calculated from K assuming constant intracellular K, a K to total body nitrogen (TBN) ratio of 3 mmol/g, and a protein content of 25%. TBW is calculated by the tritiated water method. TBN is determined from whole body counting of the gamma radiation produced by the decay of N^{14} to N^{15}.

6.1.6 Other Methods of Measurement

A number of additional techniques were also used. These techniques include skinfold thickness measurement, echography, microfat biopsies of the abdominal wall, dual-photon absorptiometry (DPA), infrared interactance, body fat computer, and underwater weighing. These techniques can be briefly summarized as follows:

• Skinfold Thickness	Pinched skinfolds measured with calipers and converted to percent body fat from body weight and height measurement. Means can be calculated from multiple sites.
• Echography	Measurement based on reflected energy from an x-ray source varying in intensity through differing tissues.
• Microfat Biopsies of Abdominal Wall	The number and morphology of fat cells evaluated with biopsies of abdominal wall and mid-thigh fat layers.
• Dual-Photon Absorptiometry (DPA)	Similar to DEXA but with a radioactive isotope energy source, usually gadolinium.
• Infrared Interactance	Spectrometric analysis of reflected waves obtained by infrared emission of 700-1100 nm wave length. Analyzed with a body fat computer.
• Underwater Weighing	Calculation of estimation of percent body fat based upon water displacement by submerging whole body in a tank.

7.0 MUSCLE STRENGTH

7.1 Measurements of Muscle Strength

The methods used in the six primary clinical trials to evaluate the effects of GH on skeletal muscle strength are shown in Table 14.

Table 14. Muscle strength: Methods of measurement

Methods	Study
Leg dynamometer (Quadriceps muscle strength)	TRN 91-131-08
Concentric extension/flexion (30 °/s, 60 °/s, 120 °/s, 180 °/s; right/left leg) Eccentric extension/flexion (30 °/s; right/left leg)	TRN 91-001/CTN 92-8124-016
Hand dynamometer	CTN 92-8124-011
Pulmonary function test Maximum expiratory pressure Maximum inspiratory pressure	TRN 91-081-01/CTN 92-8124-015

Electrodynamometers were also used in trials to measure peak voluntary isometric muscle force during neck flexion, elbow extension, hip flexion, hip extension, and elbow flexion. Maximum voluntary isometric strength of the quadriceps muscle also was measured using a strength testing chair with an additional percutaneous twitch superimposition technique used to test for maximal activation. Quadriceps muscle strength is considered to be the most reliable measurement.

8.0 EXERCISE CAPACITY

8.1 Measurements of Exercise Capacity

The methods used in the two of the six primary clinical trials to evaluate the effects of GH on exercise capacity are shown in Table 15.

Table 15. Exercise capacity: Methods of measurement

Methods	Study
Bicycle test Maximum work load Systolic blood pressure Maximum heart rate Oxygen consumption	TRN 91-001/CTN 92-8124-016
Treadmill test/Respiratory measurements Time on treadmill Maximum heart rate Maximum oxygen uptake Expiratory volume	TRN 91-131-08

9.0 CARDIOVASCULAR FUNCTION

9.1 Measurements of Cardiovascular Function

The methods used in the one of the six primary clinical trials to evaluate the effects of GH on cardiovascular function are shown in Table 16.

APPEARS THIS WAY
ON ORIGINAL

Table 16. Cardiovascular function: Methods of measurement

Methods	Study
Echocardiography (left ventricular) End-systolic diameter End-diastolic diameter Posterior wall thickness Wall stress Stroke volume Cardiac output Left ventricular mass	TRN 91-081-02/CTN 93-8124-019
Sphygmomanometer Systolic blood pressure Diastolic blood pressure Systemic resistance	TRN 91-081-02/CTN 93-8124-019
Diamove Dynamic properties of aorta/carotid artery Maximum diameter Minimum diameter Mean diameter Strain Pressure - strain elastic modulus Stiffness	TRN 91-081-02/CTN 93-8124-019

Ventricular output and other aspects of cardiac function can be evaluated by echocardiography, a noninvasive technique that does not involve injections or insertion of a catheter. In echocardiography, pulses of ultrasonic waves, commonly at a frequency of 2.25 MHz, are emitted from a transducer that also functions as a receiver to detect waves reflected back from various parts of the heart. Reflections occur wherever acoustic impedance changes, and a recording of the echoes displayed against time on an oscilloscope provides a record of the movements of the ventricular wall, septum, and valves during the cardiac cycle. Vascular function, as assessed by blood pressure and arterial parameter measurements, provides additional ancillary information.

10.0 IGF-I

Serum IGF-I levels have been shown to be low in patients with hypopituitarism and a rapid increase in circulating IGF-I levels after treatment with GH has been observed in patients with GH deficiency. Also, in acromegaly, which is accompanied by elevated IGF-I levels, IGF-I levels fall with successful treatment of the GH hypersecretion.

Serum levels of IGF-I reflect spontaneous GH secretion in normal healthy individuals, and growth hormone deficiency, correspondingly, would generally be accompanied by low IGF-I levels. For adult hypopituitary patients with growth hormone deficiency, IGF-I levels are found to be low or subnormal but with a considerable overlap between levels in those with and without growth hormone deficiency. Among the 997 patients with available data on IGF-I, 568 patients (57%) had IGF-I levels lower than -2.0 standard deviation scores (SDS). The data are consistent with those reported in the literature, although different studies have obtained different percentages of low IGF-I levels.

10.1 Methods

Since IGF-I levels are age-dependent, a SDS has been calculated according to the formula IGF-I SDS = (elog Y_{obs} - elog Y_{pred})/SE, where Y_{obs} is the observed value, Y_{pred} = 5.95 - 0.0197 x age, and SE = 0.282. The normal limits for IGF-I SDS are defined as being between -2.0 and 2.0. Due to the fact that serum IGF-I was analyzed locally at the Karolinska Hospital using the hospital's own standards, IGF-I SDS calculations for Trial TRN 91-001 have been performed according to the formula IGF-I SDS = ^{10}log Y_{obs} - 2.555 + 0.00625*age)/0.104. For each defined study interval, SDS values were calculated for the mean±SD, the median, the 25th and 75th percentile levels, and the maximum and minimum values.

11.0 Subpopulation: Body Composition By Sex

The data were evaluated for body composition by sex in trial CTN 92-8124-007.

There were statistically significant differences between genders at baseline for most body composition variables, as expected, with females having higher fat mass, lower waist/hip ratio, and lower fat-free mass than males. The gender difference was generally maintained following Genotropin treatment. Females treated with Genotropin had a statistically significant (p=0.03) lower mean fat-free mass (determined by BIA) than males treated with Genotropin at 6 months, whereas mean fat-free mass of placebo-treated patients did not differ significantly between genders. This trend was maintained at 12 months (p=0.08). In addition, there was a statistically significant treatment x gender effect (p=0.024) on total body water (determined by deuterium oxide dilution), with males having a greater response to Genotropin treatment than females at 6 months, but not at 12 months. These effects of Genotropin treatment were not attributable to differences in baseline. However, for most variables males and females responded similarly to treatment (i.e. no statistically significant treatment x gender effect).

12.0 RATIONALE FOR DOSE SELECTION

The initial dose-finding trial in profound AGHD was conducted with the usual dosage regimen prescribed for pediatric patients with GH deficiency. Although within 6 months of treatment compared to placebo there was a statistically significant and clinically important improvement in body composition, exercise capacity, muscle strength, and cardiovascular function, the side effect profile necessitated decreasing the dose for the adult population. The side effects were the result of an adaptation from dehydration to normality. As noted in subsequent trials at lower doses, most of the side effects occur early during treatment. Thus, it is advisable to allow ample time for this adaptation to occur, and the dose must be titrated depending upon the patient's response.

Replacement therapy with GH aims to normalize circulating levels of growth hormone and its mediator, IGF-I. In patients with subnormal IGF-I levels before GH replacement therapy, IGF-I levels adjusted for sex and age may be used to guide dosing as well as to monitor treatment and side effects. In patients with IGF-I levels within the normal range before treatment starts, monitoring of IGF-I levels is useful to avoid super physiological levels of IGF-I.

Therefore, dose selection must be individualized for each patient based on signs, symptoms and maintenance of serum IGF levels within the normal range for age and sex.

APPEARS THIS WAY
ON ORIGINAL

Section Two

Study 91-081-01

APPEARS THIS WAY
ON ORIGINAL

STUDY 91-081-01

The present review covers the data on the 6-month double-blind placebo-controlled study (TRN: 91-081-01) followed by 6 months of open somatotropin treatment. This study continued long-term (CTN 92-8124-015) where the patients receiving somatotropin for 12 months in the initial study were to receive somatotropin for an additional 24 months. The results presented, however, will center on the placebo-controlled study only (first six months).

1. OBJECTIVES

The primary objective of the initial study was:

To determine the effect of somatotropin replacement therapy on body composition in GH-deficient adults, as compared to a placebo-treated control group.

The secondary objectives of the initial study were:

To determine whether somatotropin treatment therapy improves Quality of Life (this will not be reviewed because the sponsor has withdrawn this claim) and to determine the safety of somatotropin replacement therapy, as compared to a placebo-treated control group.

To evaluate the effect of somatotropin replacement therapy on bone mineral density, respiratory muscle strength, serum lipids, and serum IGF-I, as compared to a placebo-treated control group.

2. PATIENTS, MATERIALS AND METHODS

2.1 Study design

The first six months of the initial study used a randomized, double-blind design with somatotropin treatment versus placebo. During the following six months both groups received somatotropin treatment.

2.2 Efficacy assessments

The primary efficacy variable was the changes in lean body mass, based on both the BIA and DEXA methods, after six months of treatment. The following assessments were made:

- total body water based on the BIA and DEXA methods;

- trunk lean mass based on the DEXA method;
- body fat based on both the BIA and DEXA methods;
- the lean/fat ratio based on both the BIA and DEXA methods;

2.3 Safety assessments

2.3.1 CLINICAL SAFETY ASSESSMENTS

Clinical safety examination consisted of physical examinations.

Complete physical examination

Height (standing)	Heart
Weight (with clothes but without shoes)	Lungs
Supine blood pressure (after five minutes rest)	
	Abdomen
Supine pulse rate (after five minutes rest)	Neurological
Head, ears, nose and throat	Muscles
Eyes	Bones
Lymph glands	
Thyroid gland	

Limited physical examination

Height (standing)
Weight (with clothes but without shoes)
Supine blood pressure (after five minutes rest)
Supine pulse rate (after five minutes rest)

2.3.4. LABORATORY SAFETY ASSESSMENTS

The following laboratory measurements were performed to document safety:
B-Hemoglobin, g/L
B-Leukocytes, $x10^9$/L
B-Thrombocytes, $x10^9$/L (except 15, 21 months visits)

B-Glucose (fasting), mmol/L
B-Insulin (fasting), mIU/L (except 15, 21 months visits)

B-HbA1c, %
S-Creatinine, µmol/L

S-Sodium, mmol/L
S-ALAT, µkat/L (except 15, 21 months visit)
S-Free T4, pmol/L
S-Testosterone, nmol/L (except 15, 21 months visits)

S-SHBG, nmol/L (not in continuation study)
S-Estradiol, nmol/L (except 15, 21 months visits)
U-Erythrocytes (test-strip)
U-Protein (test-strip)
U-Glucose (test-strip)

3. RESULTS

3.1 Protocol deviations

The study code was broken when all patient data from the first 6-month double-blind period were entered into the data base and not after 12 months, as stated in the protocol.

3.2 Study population

3.2.1. NUMBER OF PATIENTS

In order to have 20 assessable patients, a total of 25 patients with growth hormone deficiency were included. Twelve patients were randomly assigned to the somatotropin group and 13 patients assigned to the placebo group. All included patients completed the initial study and continued in the long-term study for 24 months receiving GH. No withdrawals occurred.

3.2.2 PATIENT CHARACTERISTICS

Patient characteristics at baseline are shown in Table 1 below. There were differences between the treatment groups in height (somatotropin group; 167 cm, and placebo group; 175 cm) and sex distribution (somatotropin group; 5 males and 7 females and placebo group; 11 males and 2 females).

In all patients the GH-deficiency was acquired in adulthood. Pituitary tumor was the most common cause for the GH-deficiency (10 of 12 patients in the somatotropin group and 9 of 13 patients in the placebo group). All patients also suffered from other hormone deficiencies in addition to GH-deficiency.

Table 1. Patient characteristics at baseline (Mean, SD, range and frequencies).

Grouβex M/F	Age (years)	Height (cm)	Body weight (kg)	BMI*	Peak in provocation test	Years since diagnosis of GHD	Age at diagnosis	Earlier treatment with hGH,	Etiology	Other hormone deficiencies
Somatotropin n=12	5 M 7 F	50.0 7.5	167 10	81 18	29.3 6.8	0.1 0.1	4 6	45 10	12 No	10 pituitary tumor 2 craniopharyngioma	4 TSH, ACTH, LH/FSH, ADH 8 TSH, ACTH, LH/FSH
Placebo n=13	11 M 2 F	47.7 10.8	175 7	81 14	26.8 4.7	0.7 1.2	6 6	42 12	12 No 1 Yes	9 pituitary tumor 1 craniopharyngioma 1 cholesteatoma 1 empty sella 1 trauma	6 TSH, ACTH, LH/FSH 4 TSH,ACTH, LH/FSH, ADH 2 LH/FSH 1 ACTH, LH/FSH
Total study population n= 25	16 M 9 F	48.8 9.2	171 10	81 15	28.0 5.8	0.4 0.9	5 6	44 11	24 No 1 Yes	19 pituitary tumor 3 craniopharyngioma 1 cholesteatoma 1 empty sella 1 trauma	14 TSH, ACTH, LH/FSH 8 TSH, ACTH, LH/FSH, ADH 2 LH/FSH 1 ACTH LH/FSH

* BMI = Body Mass Index

The following patients in the somatotropin group were suffering from chronic illnesses or major sequelae from previous illness:

Patient no. 5; back pain
Patient no.10; dorsal insufficiency
Patient no.23; right eye cataract
Patient no.24; benign vertigo and difficulties in walking since childhood due to bilateral congenital hip joint luxation

The following patients in the placebo group were suffering from chronic illnesses or major sequelae from previous illness:

Patient no. 2; benign hypertonia
Patient no. 3: suspected sarcoidosis and partial blindness in the right eye following pituitary operation
Patient no. 9; weakness of the right knee after motorcycle accident

4.0 STUDY DRUGS

The dosage for each patient in the somatotropin group is shown in Table 2 below.

During the double-blind treatment period, all patients, except one in the somatotropin group, were within of the intended dosages: 0.375 mg/kg body weight/week (mean dosage 0.36) for the first month, and 0.75 mg/kg/week (mean dosage 0.72) for months 2 through 6. Patient no. 4 received 0.27 and 0.57 mg/kg/week for months 1, and months 2 through 6, respectively, during the double-blind period.

The mean dosage was decreased to 0.36 mg/kg/week after 12 months of treatment. It was decreased further to 0.51 mg/kg/week after 18 months. The mean dosage during the 19 to 24 months period was 0.48 mg/kg/week.

Two patients kept the same dosage throughout the study period (patients nos. 10 and 23). Two of 12 patients (nos. 8 and 24) had a dosage decrease before the 12th month's visit. All patients, except nos. 10 and 23, had dosage decreases between 12 and 19 months. Patients nos. 1, 4, 13 and 16 also had dosage decreases during the 19 to 24 months period. Patient no. 24 had a dosage increase during this period.

Patient no. 16 stopped treatment for 98 days in connection with medical evaluations after a serious adverse event .

Towards the end of the study, five patients received similar dosage as at entry to the study (patients nos. 4, 8, 13, 19 and 24).

APPEARS THIS WAY
ON ORIGINAL

Table 2. Dosage of test drug. mg/kg body weight and week. Somatotropin group.

Patient no.	Double blind somatotropin		Open somatotropin treatment		
	month 1	month 2 - 6	month 7 - 12*	month 13 - 18	month 19 - 24
1	0.36	0.69	0.57 after 12.0 months	0.57	0.48 after 22.7 months
4	0.27	0.57	0.42 after 12.0 months	0.42	0.27 after 19.2 months
5	0.30	0.60	0.60	0.45 after 18.9 months	0.45
8	0.33	0.66	0.45 for 6 days after 8.8 months 0.33 thereafter	0.21 after 18.8 months	0.21
10	0.42	0.84	0.84	0.84	0.84
11	0.36	0.72	0.72	0.63 after 16.0 months	0.63
13	0.33	0.66	0.66 after 11.8 months	0.45 after 17.5 months	0.36 after 22.5 months
16	0.13	0.27	0.27	0.00 after 13.8 months (98 days) 0.22 after 17.0 months	0.18 after 21.9 months
17	0.36	0.72	0.72	0.51 after 17.0 months	0.51
19	0.36	0.72	0.72	0.33 after 17.0 months	0.33
23	0.39	0.78	0.78	0.78	0.78
24	0.39	0.71	0.57 after 6.6 months 0.42 after 12.0 months	0.27 after 16.8 months	0.42 after 21.2 months

*During the 7th month the dose was decreased to the same level as for month 1.

5 Efficacy

5.1 CLINICAL EFFICACY VARIABLES

The LBM difference between placebo and GH, as estimated by BIA and four compartment procedures. No statistical significance differences were observed with either method between treatments groups in the primary efficacy variable (BIA:p=.11, four compoartment:p=.18) The median percent LBM increase was 1.4% for the GH group and a decrease of 1.3% in the placebo group. This did not reach statistical difference (p=.11)

No significant changes between groups were observed in all secondary endpoints. Therefore, the results of this study cannot support the claim of the sponsor.

5.2 LABORATORY EFFICACY VARIABLES

Markers of bone metabolism during the double-blind period

There was a statistically significant increase in osteocalcin ($p< 0.001$) and a statistically significant decrease in intact PTH ($p< 0.001$) for the somatotropin group at the end of the 6-month double-blind period. No statistically significant changes were observed in the placebo group. The differences between the treatment groups in osteocalcin and intact PTH were statistically significant ($p< 0.001$).

No statistically significant changes were observed within the somatotropin or the placebo group in 1,25-OH_2 vitamin D during the double-blind period. Nor was there a statistically significant difference between the groups at the end of the double-blind period.

In 25-OH vitamin D there was a statistically significant increase in both the somatotropin ($p=0.001$) and the placebo groups ($p< 0.001$) during the 6-month double-blind period. No statistically significant difference was present between the groups at the end of the double-blind period.

There was a statistically significant increase in procollagen III-propeptide within the somatotropin group ($p=0.001$), and a statistically significant decrease within the placebo group ($p<0.001$), resulting in a statistically significant difference between the groups ($p<0.001$).

5.2.1 Lipid metabolism during the double-blind period

A statistically significant decrease in cholesterol was found for the placebo group ($p=0.026$) at the end of the double-blind period, while the somatotropin group showed only a tendency ($p=0.064$). There was no significant difference between the groups (Table 3).

At the end of the double-blind period, no statistically significant changes in triglyceride levels were observed either within or between study groups (Table 3).

There was a tendency towards an increase in cholesterol HDL in the somatotropin group (p=0.082), and a tendency towards a decrease in the placebo group (p=0.078), giving a statistically significant difference between the groups (p=0.020) (Table 3).

The calculated LDL as well as the LDL/HDL ratio decreased significantly in the somatotropin group (p=0.024). There was also a statistically significant difference in ratio between the treatment groups at the end of the double-blind period (p=0.043) (Table 3).

Table 3. Lipid metabolism during the 6-month double-blind period. Absolute change from baseline over time by treatment group.

	Somatotropin group					Placebo group					
	Baseline		Change 0-6 months			Baseline		Change 0-6 months			
Variable	mean	SD	mean	SD	p-value within	mean	SD	mean	SD	p-value within	p-value between
Cholesterol	5.6 n=11	0.7	-0.4	0.7	0.064	6.1 n=13	0.8	-0.4	0.5	**0.026**	n.s.
Triglycerides	1.6 n=11	1.2	0.0	0.8	n.s.	1.5 n=13	0.6	-0.1	0.5	n.s.	n.s.
Cholesterol HDL	1.6 n=11	0.2	0.1	0.2	0.082	1.2 n=13	0.3	-0.1	0.2	0.078	**0.020**
LDL (calculated)	3.7 n=11	0.5	-0.5	0.6	**0.024**	4.2 n=13	0.7	-0.2	0.4	n.s.	n.s.
LDL/HDL ratio	3.3 n=11	1.0	-0.7	0.7	**0.024**	3.7 n=13	1.4	0.0	0.6	n.s.	**0.043**

APPEARS THIS WAY
ON ORIGINAL

5.2.2 Serum IGF-I during the double-blind period

There was a statistically significant increase within the somatotropin group in both IGF-I and IGF-I SDS at the end of the double-blind period (p<0.001). The difference between the somatotropin and the placebo group was also statistically significant (p<0.001) (Table 4).

Table 4. Effects of treatment on IGF-I during the 0 to 6 months double blind period. Absolute change from baseline over time by treatment group

	Somatotropin group					Placebo group					
	Baseline		Change 0-6 months			Baseline		Change 0-6 months			
Variable	mean	SD	mean	SD	p-value within	mean	SD	mean	SD	p-value within	p-value between
IGF-I, g/L	67 n=12	44	156	64	**<0.001**	67 n=13	23	-3	22	n.s.	**<0.001**
IGF-I SDS	-3.33 n=12	2.13	4.80	2.01	**<0.001**	-3.16 n=13	1.50	-0.12	1.36	n.s.	**<0.001**

Nine of the 12 patients in the somatotropin group, and 11 of the 13 patients in the placebo group had IGF-I levels below 2 SDS the age-matched reference limits at baseline. After 6 months' double-blind somatotropin treatment, 10 of 12 patients were within normal aged-matched reference levels, while 2 of 12 patients exceeded these levels (>+2 SDS). In the placebo group, 10 of 13 patients were below normal aged-matched reference levels after 6 months treatment (<-2 SDS) and 3 of 13 were within normal range (2 SDS).

5.2.4 EFFICACY SUMMARY

The six-month randomized double-blind phase of the study was designed to document the effects of growth hormone treatment on body composition.

There were not statistically significant differences between the treatment groups in LBM.

No statistically significant difference between treatment groups was observed in respiratory muscle strength, or in bone mineral density.

A statistically significant increase in circulating levels of IGF-I was seen after 6 months. At baseline 9 of 12 patients in the somatotropin group and 11 of 13 patients in the placebo group had IGF-I levels below the age-matched reference

limits (<-2 SDS). After 6 months' double-blind somatotropin treatment, 10 of 12 patients had normal levels (within 2 SDS), while 2 of 12 had levels exceeding 2 SDS. In the placebo group, 3 of 13 were within and 10 of 13 below normal range after 6 months of double-blind treatment.

For lipids, HDL-cholesterol increased during somatotropin treatment in comparison to placebo, and the LDL/HDL ratio decreased statistically significantly.

6.0 Safety

6.1 CLINICAL SAFETY VARIABLES

6.1.1 Height and body weight

There was a statistically significant increase in height in the somatotropin and placebo groups at the end of the double-blind period ($p=0.001$ and $p<0.001$, respectively). No statistically significant difference between the groups was observed.

A statistically significant decrease in body weight was present in the somatotropin group ($p=0.009$) at the end of the double-blind period, giving a statistically significant difference between the somatotropin and the placebo group ($p=0.005$).

The statistically significant increase in height observed in both the somatotropin and the placebo group was maintained during the period when all patients were treated with somatotropin ($p=<0.001$).

The changes in body weight compared to baseline were inconsistent during somatotropin treatment. When all patients were pooled (combined group) a statistically significant decrease was present after 6 months of somatotropin treatment ($p=0.001$). However, this decrease was not present after 12 and 24 months of treatment.

6.1.2 Blood pressure and pulse rate

There were no statistically significant changes in diastolic blood pressure between groups. No statistically significant change or difference in pulse rate was observed during the double blind period.

6.2 LABORATORY SAFETY VARIABLES

All judgments of the clinical significance of a deviation in laboratory safety variables, whether a deviation was serious or non-serious, and its relationship to study medication, referred to in the present report, were made by the investigator.

Hemoglobin

There was a statistically significant increase within normal range in hemoglobin values between the somatotropin and the placebo groups (p=0.036).

Leukocytes

No statistically significant changes within groups, or difference between somatotropin and placebo treatment, was observed during the double-blind period.

Thrombocytes

There was a statistically significant increase within normal range in thrombocytes for the somatotropin group after 6 months' double-blind treatment (p=0.009), giving a statistically significant difference between the treatment groups (p=0.046).

Glucose

No statistically significant changes in fasting glucose between the groups, were observed at the end of the 6-month double-blind period.

Insulin

There was a statistically significant increase within normal range for the somatotropin group at the end of the double-blind period ($p<0.001$), giving a statistically significant difference between the treatment groups ($p=0.021$).

HbA1c

No statistically significant changes in HbA1c between the treatment groups.

Creatinine

Creatinine was statistically significantly decreased within normal range in both the somatotropin group ($p<0.001$) and the placebo group ($p=0.009$) at the end of the double-blind period.

The creatinine levels were statistically significantly decreased within normal range after 6 months ($p<0.001$) and 12 months ($p<0.001$), but not after 24 months of somatotropin continuation treatment.

Two patients had high creatinine levels; one at entry to the study (patient no. 7) and one during somatotropin treatment (patient no. 9). None of the deviations were judged to be of clinical significance.

Sodium

There was no statistically significant difference in sodium between the treatment groups.

When all patients were pooled (combined group), there were statistically significant increases within normal range after 6 months ($p<0.027$) and 12 months ($p=0.014$) of somatotropin continuation treatment.

Three patients with initially normal sodium levels, had below-normal values during somatotropin treatment (patients nos. 4, 9, and 25). Six patients had values below normal range at entry to the study and/or during placebo treatment (patients nos. 5, 8, 11, 12, 16, 18 and 22). In one of these patients (no. 22), the sodium level at 15 months was judged to be significantly below normal clinical range. The deviation was judged to be non-serious and not likely related to the study drug. No action was taken.

Potassium

There was no statistically significant difference between the treatment groups in potassium level at the end of the 6-month double-blind period.

A statistically significant increase (p=0.003) within normal range was observed for the total study population (combined group) after 12 months of somatotropin treatment, but not after 6 and 24 months of treatment.

Three patients with initially normal potassium levels had values below normal range at some visit during somatotropin treatment (patients nos. 13, 23 and 24). Patients nos. 1 and 2 had below-normal values at entry to the study and at several visits during the study period. The low level at 15 months in patient no. 1, and at 15 and 18 months in patient no. 2, were judged to be clinically significant. These deviations were judged to be non-serious and a relationship to the study drug was deemed unlikely. No action was taken.

ASAT

No statistically significant changes in ASAT within the treatment groups or difference between the groups were observed at the end of the 6-month double-blind period.

A statistically significant decrease within normal range was observed in ASAT after 24 months of somatotropin treatment for the total study population (p=0.010).

One patient with initially normal ASAT level had values above normal range after 6 months of somatotropin treatment (patient no. 11). This increase was judged to be clinically significant. The patient was within normal range at all other visits. Patient no. 7 had high ASAT levels at baseline and at 30 months and both were judged to be clinically significant. Two patients with initially high levels normalized during the study period (patients nos. 12 and 21). None of the clinically significant high levels were judged to be serious or related to the study drug. No action was taken.

ALAT

No statistically significant changes in ALAT within the treatment groups, or difference between the groups, were observed at the end of the 6-month double-blind period.

A statistically significant decrease within normal range was observed in ALAT after 12 months (p=0.010), but not after 6 and 24 months of somatotropin treatment for the total study population.

Three patients with initially normal ALAT levels had values above normal range at some visit during somatotropin treatment (patients nos. 3, 19 and 20). The elevations were judged to be clinically significant. Two patients with high levels at baseline and after 6 months on placebo, normalized during the study period (patients nos. 12 and 21). The elevated level after placebo in patient no. 21 was judged to be clinically significant. In patients nos. 7 and 11, with elevated values present at baseline, further elevations were also present at some visit during treatment. None of the clinically significant elevations were judged to be serious or related to the study drug. No action was taken.

Free T4

No statistically significant changes in free T4 within the treatment groups, or difference between the groups, were observed at the end of the 6-month double-blind period.

A statistically significant decrease within normal range was observed in free T4 after 6 and 12 months, but not after 24 months of somatotropin treatment for the total study population (p=0.026 and p=0.011, respectively).

One patient had values above normal free T4 range at entry to the study and during placebo treatment (patient no. 7). Six patients had above-normal values during somatotropin treatment (patients nos. 6, 10, 11, 15, 21 and 23). In patients nos. 6, 10 and 23, the deviations at 30, 6 and 6 months, respectively, were judged to be clinically significant. None of the elevated values was judged to be serious and no action was taken with the study drug. However, patient no. 10 had her thyroxin dosage reduced to 0.15 mg daily. For patients nos. 10 and 23, a relationship to the study drug was judged as possible. For patient no. 7 a normal level was deemed to be a clinically significant deviation.

Three patients had below-normal free T4 levels during somatotropin treatment (patients nos. 9, 18, and 20). The deviations in all patients were judged to be clinically significant. For patients nos. 9 and 20, a relationship to the study drug was judged to be probable and for patient no. 18, possible. These deviations were judged to be non-serious and no action was taken with the study drug. However, patient No. 18 had his thyroxin dosage increased to 0.15 mg daily (from 12 month visit).

In patients nos. 3 and 22, free T4 levels within normal range were judged to be clinically significant deviations.

Triiodothyronine

Triiodothyronine was measured during the long-term continuation study only. However, one deviation from normal range was observed at an extra determination at 12 months in patient no. 7. This high level (9.5 pmol/L; ref. 4.3-7.6) was judged to be of clinical significance but non-serious and no action was taken with the test drug.

Testosterone

No statistically significant changes in testosterone within the treatment groups, or difference between the groups, were observed at the end of the 6-month double-blind period.

There was a statistically significant decrease in testosterone level for the total study population (combined group) after 12 months of somatotropin treatment ($p=0.035$), but not after 6 and 24 months.

Six patient had values below normal range at entry to the study or during placebo treatment (patients nos. 2, 7, 15, 21, 22 and 23). Seven patients with normal testosterone levels at entry to the study or during placebo treatment had below-normal values at some visit during somatotropin treatment (patients nos. 3, 9, 11, 12, 14, 16 and 18). None of the deviations were judged to be clinically significant.

Sex hormone binding globulin (SHBG)

SHBG was measured during the initial study only. No statistically significant changes within the treatment groups, or difference between the groups, were observed after 6 months of treatment.

SHBG levels both below and above normal range were observed during baseline and during somatotropin treatment. The deviations judged as clinically significant are shown below. None of the deviations was judged as serious, any relationship to study medication was deemed unlikely and no action was taken.

Estradiol

No statistically significant changes in estradiol within the treatment groups, or difference between the groups, were observed at the end of the 6-month double-blind period.

There was a statistically significant decrease (within normal range) in estradiol for the total study population (combined group) after 12 months of somatotropin treatment.

Five patients had below-normal oestradiol levels at entry to the study (patients nos. 4, 10, 13, 19 and 24). Four of these remained low during somatotropin treatment (patients nos. 4, 10, 13, and 24). Two patients had above-normal values at entry to the study (patients nos. 3 and 7). The elevation in patient no. 3 was judged to be clinically significant, but not serious and not likely related to the study drug. No action was taken. Three patients with normal levels at entry to the study had values below normal range during somatotropin treatment (patients nos. 5, 6 and 17), and three initially normal patients, had values above normal range during somatotropin treatment (patients nos. 1, 11 and 23).

Bilirubin

Bilirubin was measured during the continuation study only. Four patients had values exceeding the normal range during somatotropin treatment (patients nos. 14, 15, 19 and 23). For two of the patients (nos. 14 and 19) the elevated values were judged to be clinically significant, not serious and a relationship to treatment was deemed unlikely. No action was taken.

Urinary-Erythrocytes

One patient had a positive hematuric test at baseline only (patient no. 13). Two patients (nos. 14 and 17) had positive tests both at baseline and during somatotropin treatment. Six patients had positive tests during somatotropin treatment (patients nos. 4, 10, 14, 17, 22 and 25). Several of these were clinically significant according to the investigator . The clinically significant elevations were judged as non-serious, except in patient no. 14 where the elevation at 30 months was serious according to the investigator. In patient no. 17, an X-ray of the kidneys and a gynecological investigation was carried out. No abnormalities were found and the positive u-erythrocyte findings were diagnosed as benign microscopic hematuria. However, a relationship to the study medication was deemed unlikely in all clinically significant positive u-erythrocyte tests. No changes were made in study medication.

Proteinuria

One patient (no. 13) had a positive urinary protein test at entry to the study (clinically significant) and five patients had positive tests during treatment (patients nos. 9, 12, 15, 20 and 24). In three of these (patients nos. 12, 17 and 24) the elevations were judged as clinically significant. The observed positive test in patient no. 17 was only observed at 9 months visit when an extra test was performed due to an extra control of hematuria. According to the investigator they were not serious, not likely to be related to study medication, and no action was taken.

Glucosuria

Glucose in urine was measured during the continuation study only. One patient (no. 25) had an elevated urinary glucose level after 24 months of treatment. The elevation was judged as clinically significant. It was not serious, a relationship to study medication was deemed unlikely, and no action was taken.

6.3 ADVERSE EVENTS

Twenty-one adverse events were reported by 9 patients during the double-blind placebo period and 33 events were reported by 11 patients during the double-blind somatotropin period. During the open somatotropin treatment 175 events were reported by 24 patients.

Upper respiratory tract infection was the most frequently reported individual adverse event during the double-blind period; 3 events were reported by 3 patients (nos. 14, 15 and 18) during the placebo period and 6 events were reported by 6 patients (5, 11, 13, 16, 19 and 24) during the somatotropin period.

Peripheral swelling was reported once by 6 patients (nos. 4, 8, 10, 13, 19 and 24) during the six months double-blind somatotropin period and once during the double-blind placebo period.

Hypesthesia was reported once by 4 patients (nos. 8, 13, 19 and 24), paraesthesia once by 3 patients (nos. 10, 16 and 24) and stiffness of extremities once by 3 patients (nos. 4, 8 and 24) during the six months double-blind somatotropin period. None of these symptoms were reported during the double-blind placebo period.

Migraine was the most frequently reported adverse event during the six months double-blind placebo period (4 reports in patient no. 25).

During the total somatotropin treatment (both double-blind and open period) the following adverse events were most frequently reported:
peripheral swelling - 25 events in 16 patients
upper respiratory tract infection - 23 events in 12 patients
arthralgia - 14 events in 10 patients
paraesthesia - 14 events in 9 patients
stiffness of extremities - 11 events in 9 patients
gastroenteritis - 11 events in 8 patients
hypesthesia - 7 events in 5 patients
back pain - 7 events in 4 patients
fatigue - 6 events in 6 patients
migraine - 4 events in 2 patients
pain in extremities - 4 events in 3 patients

6.3.1 SERIOUS ADVERSE EVENTS

There were 14 serious adverse events reported for 6 patients during somatotropin treatment.

Patient no. 2 was hospitalized for 5 days after 150 days on somatotropin treatment due to respiration insufficiency during aspiration when intubated in connection with a dental operation. He recovered completely after removal of gastric content from the airways followed by respirator therapy and antibiotic treatment. The event was judged as severe and not likely related to study medication. The medication continued unchanged. The patient was hospitalized again after 200 days for three days for gastroenteritis with diarrhoea and vomiting. The patient recovered completely. The event was judged as severe. A causal relationship to somatotropin was judged unlikely and study medication was continued. The patient has a 15 to 20 year history of gastroenteritis episodes requiring hospitalization and treatment with cortisone and saline infusion. Sixteen days later the patient was hospitalized for one day for local chest pain under the left pectoralis muscle, and nausea. The symptoms disappeared after single doses of paracetamol, codeine and prochlorperazine. The muscle pain was believed to be associated with previous heavy lifting. The event was judged to be moderately severe and a causal relationship to somatotropin was judged unlikely. Treatment with somatotropin remained unchanged. Later during the study (518 days on somatotropin therapy), the patient was hospitalized for one day for nausea, vertigo and hypertension. The symptoms disappeared when dosage of existing antihypertensive treatment was increased. The event was judged to be mild and a causal relation to somatotropin was judged unlikely. Treatment with somatotropin remained unchanged. At the end of the study (685 days on somatotropin therapy), the

patient was hospitalized for upper airway infection with coughing and fever. He recovered completely after antibiotic treatment. The event was judged to be severe and a causal relation to somatotropin was judged unlikely. Treatment with somatotropin remained unchanged.

Patient no. 3 was admitted to hospital after a grand mal seizure with unconsciousness and tiredness after 422 days on somatotropin therapy. The patient has epilepsy but took no anti-epileptic medication at the time. He recovered completely after treatment with diazepam and carbamazepin. According to the Adverse Event Report the event was judged to be severe, and according to the CRF it was judged as moderate. A causal relation to somatotropin was judged unlikely. Treatment with somatotropin was stopped for one day. Later (458 days on somatotropin), the patient was hospitalized for 10 days for high fever and chills. He recovered completely after switching anti-epileptic treatment and after treatment with prednisolone. The fever was believed to be either secondary to the anti-epileptic treatment or secondary to a progression of an existing sarcoidosis. The event was judged to be severe and a causal relationship to somatotropin was judged unlikely. Treatment with somatotropin remained unchanged.

Patient no. 5 was admitted to hospital for an upper airway infection followed by headache, nausea and vomiting after 213 days somatotropin treatment. The patient stayed in the hospital for 2 days. She was treated with glucose 5% and hydrocortisone. The patient was fully recovered after 14 days. The event was judged as moderate, a relationship to study medication was thought unlikely and dosage remained unchanged. After 616 days on somatotropin therapy the patient was hospitalized two days for migraine. The patient recovered completely after fasting, saline infusion and intravenous plus oral hydrocortisone. The event was judged as severe, a relation to study medication was judged unlikely and dosage remained unchanged.

Patient no. 16 was admitted to hospital for 1 day due to an anaphylactic shock after eating crab-fish. The patient was treated with adrenalin, betamethasone and glucose infusion. He recovered completely after 1 day. The event was judged as severe, a relation to study medication was deemed unlikely and dosage remained unchanged. Later the patient had two episodes of tachycardia during the open somatotropin treatment (after 409 and 420 days on somatotropin therapy). He had a history of supraventricular tachycardia. The patient recovered completely after i.v. treatment with verapamil and sotalol (first episode) and i.v. metoprolol plus cardioversion (second episode). The events were judged to be moderate and a causal relation to somatotropin was judged unlikely. Treatment with somatotropin was interrupted for 98 days while the tachycardia was further evaluated.

Patient no. 21 was admitted to hospital for pain in the left groin, fever and diarrhoea (diverticulitis) after 654 days on somatotropin therapy. The patient recovered completely after fasting, fluid substitution, antibiotic infusion and hydrocortisone injections. The event was judged to be severe and a causal relation to somatotropin was judged unlikely. Treatment with somatotropin remained unchanged.

Patient no. 24 was hospitalized for 2 days due to gastroenteritis after 253 days on somatotropin therapy. The patient recovered completely within 3 days after fasting and treatment with hydrocortisone. The event was judged as severe, a relation to study medication was deemed unlikely and dosage remained unchanged

6.4 SAFETY SUMMARY

Statistically significant increases were observed in height in both treatment groups at the end of the 6 months double-blind period. There was no statistically significant difference between the placebo and the somatotropin group. A statistically significant decrease in body weight was recorded in the somatotropin group after 6 months double-blind treatment, resulting in a statistically significant difference between the treatment groups. However, the changes during the open somatotropin treatment were inconsistent.

During somatotropin replacement, significant changes compared to baseline were seen in clinical chemistry and hematology tests. For the total study population there were increases within normal ranges in fasting blood glucose, fasting insulin as well as glycated hemoglobin levels at 6, 12 and 24 months. Clinically significant increases in fasting insulin levels were noted for 4 patients and in HbA1c levels for 2 patients. Hemoglobin and thrombocytes increased within normal limits during the double-blind period, but there were no difference at 12 or 24 months compared to study start. Leukocytes were increased after 24 months, but within reference limits. However, no change were seen during the double-blind period. For creatinine, sodium, potassium no consistent changes were noted, nor in ASAT or ALAT values. This was also true for bilirubin, free thyroxine levels as well as for SHBG, testosterone and oestradiol levels. However, individual patients showed occasional clinically significant deviant values.

Adverse event were reported by 9 patients (21 adverse events) during the double-blind placebo treatment and by 11 patients (33 events) during the double-blind somatotropin treatment. During the total somatotropin treatment period, adverse events were reported by 24 patients. The most frequently reported events were: peripheral swelling (26 events in 16 patients), upper respiratory

tract infection (23/12), arthralgia (14/10), paraesthesia (14/9), stiffness of extremities (11/9), gastroenteritis (11/8), hypesthesia (7/5) back pain (7/4), fatigue (6/6), pain in extremities (4/3) and migraine (5/2).

Serious adverse events were reported in six patients during somatotropin treatment, in none of the events was a causal relationship to treatment judged likely by the investigator.

7. DISCUSSION

All 25 patients had severe growth hormone deficiency as demonstrated by very low GH-peaks after an appropriate stimulation test. In eleven patients, the GH-deficiency was diagnosed within two years of study start, but the investigator judged it likely to have existed for a period exceeding two years. The patients were also regarded as being on stable replacement therapy with other pituitary hormones since more than two years. All patients had acquired their hypopituitarism during adulthood, and no patient had isolated GH-deficiency. Hence, the patients are representative for adults with pronounced growth hormone deficiency.

Their replacement therapy with cortisone, thyroxine and sex hormones was unchanged during the study for the majority of the patients. Dose adjustments were made in 11 patients.

Compliance to treatment was good both during the double-blind period and during the open somatotropin treatment. There was no withdrawal from treatment during the entire 24-month study period.

During the 6-month placebo-controlled treatment period the changes in LBM as assessed by BIA and the four compartment model did not differ between groups. There was no change in bone mineral density. A beneficial effect on lipids was documented, with an increase in HDL-cholesterol and a decrease in LDL/HDL ratio. No significant changes were observed in any of the secondary endpoints.

Serum IGF-I levels rose during treatment with a normalization in the majority of the patients. The doses used appear to be correct for normalizing IGF-I levels as group averages, but the need for individualizing dosing in order to avoid super physiological levels that were observed in two subjects is strongly suggested.

Adverse events considered to be related to somatotropin treatment such as fluid retention with symptoms like peripheral swelling, arthralgia, stiffness of extremities, hypothesia or paraesthesia were reported 72 times in 18 patients.

The dose was reduced in 15 of these patients. In 11 patients, these adverse symptoms had disappeared completely after 24 months somatotropin treatment. Untoward effects like these were expected and patients were specifically asked about them.

With regard to laboratory values, fasting blood glucose and insulin levels as well as amount of glycated hemoglobin rose during treatment, but remained within normal ranges.

8. CONCLUSION

The results of this study do not support the sponsor claim of benefit for the use of GH in adult GH deficient subjects.

APPEARS THIS WAY
ON ORIGINAL

Section Three

Study 91-001

APPEARS THIS WAY
ON ORIGINAL

STUDY 91-001

1.0 OBJECTIVES

The primary objective of the initial study (TRN 91-001) was to determine the effect of somatropin replacement therapy on body composition in GH-deficient adults compared to a placebo-treated control group.

Secondary objectives of the initial study were to determine whether somatropin replacement therapy improves quality of life, to determine the safety of somatropin replacement therapy compared to a placebo-treated control group, and to evaluate the effect of somatropin replacement therapy on bone mineral density, muscle strength, exercise capacity, serum IGF-I and plasma lipids as compared to a placebo-treated control group.

The primary objective of the continuation study (CTN 92-8124-016) was to determine long-term changes in body composition by somatropin replacement. Because this part of the studies were not properly controlled they will not be reviewed. The results of this extension study, however, indicate that the GH effects shown during the first six month are maintained.

2.0 PATIENTS, MATERIALS AND METHODS

2.1 Study design

The first 6 months of the initial study (TRN 91-001) used a randomized, double-blind design with somatropin treatment versus placebo.

2.1.1 Study population

Twenty patients (male and female) with GH-deficiency acquired in childhood or adulthood were included in the initial study, ten in each treatment group.

All patients wishing to continue somatropin treatment were included in the long-term continuation study.

<u>Inclusion criteria in the initial study</u>

- GH-deficiency (isolated or as part of hypopituitarism). Likely to have existed for at least 24 months.
- Stimulated maximum peak growth hormone response less than 5 µg/l. Acceptable stimulation tests were GHRH, arginine, glucagon, clonidine and insulin induced hypoglycemia. A test performed within 5 years prior to inclusion and after 20 years of age would be accepted only if it could be verified from source data. Otherwise, a new test was required.
- IGF-I level in serum below the normal range (normal range = 100 to 280 ng/ml).
- Age
- Patients with multiple pituitary hormone deficiency on stable replacement therapy for at least 6 months.
- Informed consent obtained.

Exclusion criteria in the initial study

- Treatment with growth hormone during the last 12 months.
- Acute severe illness during the last 6 months.
- Pregnancy (to be excluded with test).
- Chronic severe liver disease (gamma-GT and/or ASAT and/or ALAT twice the upper limit of the normal range of laboratory values).
- Chronic severe renal disease (S-creatinine > 120 µmol/l or repeated positive test for hematuria or proteinuria).
- Supine blood pressure > 160 mm Hg systolic or > 100 mm Hg diastolic.
- Diabetes mellitus (type I and II).
- History of malignancy (although patients treated for cranial tumors or leukemia, both causing GH-deficiency, were acceptable).
- Chronic medication, except pituitary replacement therapy, bromocriptine, contraceptives, treatment for mild hypertension and mild asthma.
- Suspected non-cooperativeness.
- Known or suspected hypersensitivity to m-cresol.

2.1.2. RANDOMIZATION PROCEDURE

The randomization of consecutive numbers to either of the two groups (somatropin/ placebo) in the double-blind phase and the preparation of the randomization list and emergency envelopes were performed at the Department of Biostatistics and Data Management, Peptide Hormones, Pharmacia, Stockholm, Sweden. A computerized randomization procedure was used.

Allocation of patient numbers in the double-blind phase was made by the investigator at the baseline visit. The patient was given the lowest available patient number in the series. The drugs (somatropin or placebo) for the 0 to 6-month double-blind period were pre-packed in numbered boxes according to the randomization list.

The study code was kept in sealed envelopes at the investigator site. The envelopes were not to be opened except in an emergency requiring knowledge of actual treatment. The code envelopes were to be returned to Pharmacia after completion of the study. The code was to be broken at the 12th month's visit.

2.1.3. BLINDING PROCEDURE

The initial study was double-blind and placebo-controlled during the first 6 months. The placebo was supplied in cartridges identical to the active somatropin cartridges.

2.2 Therapy

2.2.1 TREATMENT SCHEDULE

During the first 4 weeks of the first two 6-month periods in the initial study, the patients injected a volume corresponding to 0.375 mg/kg body weight/week and thereafter 0.75 mg/kg body weight/week for 5 months. The dosage of 0.75 mg/kg body weight/week was to be maintained during the continuation study. The weekly dose was divided into 7 daily, s.c. injections. Irrespective of body weight the maximum dose per day was not to exceed 12 mg.

The patients were instructed by a nurse how to inject themselves.

2.2.2 CONCOMITANT THERAPY

No other chronic medication was allowed when entering the initial study with the exception of pituitary replacement therapy, bromocriptine, contraceptives, treatment for mild hypertension and mild asthma. Adjustments on clinical grounds were allowed but were documented in the Case Report Forms. The patients were allowed to take any drug considered necessary for the treatment of any intercurrent disease of a less severe nature. During the long-term continuation study, all therapy necessary for the patient's welfare was allowed at the discretion of the investigator.

No other investigational drugs were allowed to be used concomitantly with the test drug. The patients were not allowed to participate concurrently in any other clinical study.

All therapies were recorded in the Case Report Forms.

2.3. Patient characteristics

In order to ensure that the inclusion criteria were fulfilled and to enable verification of patient identity and status relative to source data, the patient's birth date, sex, ethnic origin, concomitant medication and laboratory values were recorded. A stimulation test was documented and IGF-I levels were checked. Year of diagnosis of GHD and other hormone deficiencies such as TSH deficiency, ACTH deficiency, LH/FSH deficiency, ADH deficiency and others were recorded. Earlier treatment with growth hormone, chronic diseases, medical history and physical examination were also recorded.

2.4 Efficacy assessments

2.4.1 CLINICAL EFFICACY ASSESSMENTS

Body composition was determined using Bioelectrical Impedance Analysis (BIA) and DEXA analysis.

Bone mineral density

Bone mineral density of the forearm (distal and proximal) was measured with single-photon absorptiometry (SPA). In this study bone mineral density of the total body, spine and the lumbar vertebral bodies L2 through L4 (dorsal position) and the lumbar vertebral bodies L2 and L3 (lateral position) were measured using DEXA.

2.4.2. LABORATORY EFFICACY ASSESSMENTS

The following laboratory measurements were performed in order to document efficacy of the drug.

Lipid analysis

Serum lipids were measured at baseline, 6 and 12 months (placebo group also at 18 months).

Effect on blood lipids was investigated with preparative ultracentrifugation and determination of VLDL-, LDL- and HDL-fractions of triglycerides and cholesterol. Subclassification of HDL with gradient gel electrophoresis was to be measured: HDL 2B, 2A, 3A, 3B, and 3C. S-cholesterol and S-triglycerides were also to be measured.

Lab measurements	Normal range
S-Osteocalcin, µg/l	<9 female <14 post menopausal <11 male
S-Procollagen I propeptide (S-PICP), IU/l	50-170, female 38-202, male
S-Procollagen III propeptide, IU/l	
S-Ca^{2+} (ionization) mmol/l	
S-Phosphate, mmol/l	
S-Alkaline phosphatase (ALP), µkat/l	<4.6
U-Hydroxyproline, mmol/24h	(only TRN 91-001)
(S-ICTP), µg/l	(only CTN 92-8124-016)
(U-PYD & U-DPYD), nmol/l	female (only CTN 92-8124-016) male (only CTN 92-8124-016)

Lab measurements	Changes in normal range during study
S-Ca (total calcium), mmol/l	(from CTN 92-8124-016)

IGF-I
Insulin-like growth factor I (IGF-I) is essential for growth and is supposed to mediate the growth-promoting effects of growth hormone postnatally.

IGF-I was to be measured at every visit.

2.4.3. CLINICAL SAFETY ASSESSMENTS

The clinical safety examination was similar to the previous study.

3. RESULTS

3.1 Study population

3.1.1. NUMBER OF PATIENTS

Twenty patients with growth hormone deficiency were included in the initial study from November 18, 1991 to March 27, 1992. Ten patients were randomized to the somatropin group and ten patients to the placebo group. All patients completed the 0 to 6-month double-blind period and the 6 to 12-month open period according to the protocol.

Nineteen patients continued into the continuation study. Patient no. 7 wished not to continue in the continuation study.

3.1.2. TREATMENT WITHDRAWALS

Initial study

There were no withdrawals during the 0 to 6-month double-blind period or during the 6 to 12-month open period in the initial study.

Continuation study

No patients withdrew during the 12-month long open period in the continuation study (months 12 to 24 for the somatropin group and months 18 to 30 for the pl/somatropin group).

3.2 PATIENT CHARACTERISTICS

Five females and five males, (mean age 41 years), were included in the somatropin group, and four females and six males, (mean age 40 years), were included in the placebo group. The distribution in age among the somatropin group was: one patient in the interval below 30 years (22 years), five patients 31 to 40 years, three patients 41 to 50 years and one patient above 50 years (57 years). The distribution in age among the placebo group was: seven patients 31 to 40 years, and three patients 41 to 50 years.

Peak GH response after the provocation test was 0.2 ng/ml in nine patients and 0.9 ng/ml in one patient in the somatropin group. In the placebo group, the peak GH response after provocation test was 0.2 ng/ml in nine patients and 2.0 ng/ml in one patient.

The mean years of GH-deficiency at the start of the study was 10.8 years in the somatropin group compared to 13.2 years in the placebo group. Six patients (nos. 1, 3, 6, 7, 14 and 20) were diagnosed as GH-deficient for less than two years prior to the study start but all these patients had other hormone deficiences. With regard to etiology and other pituitary hormone deficiencies, there were no important differences between the groups.

Patient no 2 had hyperuricemia diagnosed 1981, patient no 8 had psoriasis diagnosed 1989 and patient no 10 had had attacks of dizziness since 1987.

4.0 CONCOMITANT THERAPY

Patients with pituitary hormone deficiencies other than GH continued their routine replacement therapy when entering the trial. Changes in concomitant medication during the trial were recorded in seven patients in the somatropin group and in seven patients in the placebo group.

The changes in concomitant therapy in the somatropin group consisted of: temporary dose adjustments in cortisone acetate in three patients; no. 7, due to joint pain, no. 2, treated with hydrocortisone due to abdominal pain and no. 8, due to acute tonsillitis (this patient was at the same time also treated with erythromycin). Dose adjustments in cortisone acetate and thyroxine in patient (no. 19) were permanent. One patient (no. 1) stopped one treatment of pituitary insufficiency (nandrolone) and one patient (no. 12) stopped LH/FSH (estradiol) treatment. One patient (no. 13) was treated for tension headache.

In the pl/somatropin group, changes in concomitant therapy consisted of adjustments in cortisone acetate in two patients (nos. 5 and 20) due to gastroenteritis (patient no. 20) and adrenal insufficiency (patient no. 5). One patient (no. 3) had lumbago, another (no. 14) developed a cough and one patient (no. 16) was diagnosed with Herpes Zoster. Two patients (nos. 17 and 18) developed infections: bronchitis (no. 17) and pharyngitis (no. 18). Both were treated with penicillin.

4.1 Study medication

4.2 STUDY PRODUCT

During the first four weeks of the study, the dose target dose: 0.375 mg/kg/week). During the following five months, the (target dose: 0.75 mg/kg/week) in all patients except for patients nos. 7, 8 and 13 (all on somatropin). In patient no. 7 the dose was reduced from 0.78 to 0.63 mg/kg/week from the second month. Patient no. 8 had a dose reduction from 0.69 to 0.48 mg/kg/week between the third and the fourth month and an increase of the dose to 0.66 mg/kg/week from 4 months. In patient no. 13 the dose was reduced from 0.72 to 0.54 mg/kg/week from the second month.

At the end of the 6 to 12-month open period, 18 of 20 patients received a dosage which was within the range of of the intended dosage of 0.75 mg/kg/week.

4.3 COMPLIANCE

The number of missed injections was asked for at each visit. The number of patients who missed injections during the 0 to 6-month double-blind phase are shown in Table 1 below.

Table 1 Number of patients with missed injections during the double-blind 0-6 month phase.

	Somatropin n=10	Placebo n=10
No. of patients with missed injections	3	6
<5% missed injections	3	6
≥5% missed injections	0	0
Withdrawn patients during the period	0	0

In the pl/somatropin group patient no. 11 missed more than 10% of the injections corresponding to 77 injections (42.3%) and patient no. 14 missed more than 5% of the injections corresponding to 10 injections (5.5%) during the period 18 to 24 months with somatropin treatment. In the pl/somatropin group patient no. 18 missed more than 10% of the injections corresponding to 34 injections (15.2%) during the period 0 to 6 months with somatropin treatment.

Patient no. 15 in the somatropin group missed more than 5% of the injections during the 12 to 18-month open period corresponding to 17 injections (8.7%).

5.0 Efficacy

5.1 CLINICAL EFFICACY VARIABLES

5.1.1. Clinical efficacy variables, double-blind period

Body composition
Lean body mass

BIA method: The mean value of lean body mass at baseline was 51.8 kg for the somatropin group and 53.5 kg for the placebo group. After 6 months of treatment there was an increase of 2.8 kg in the somatropin group (p=0.002). The difference between the groups was statistically significant (p=0.028).

DEXA method: The mean value of lean tissue at baseline was 45.5 kg for the somatropin group and 49.0 kg for the placebo group. For the somatropin group there was an increase of 2.7 kg (p=0.004) at 6 months. There was a statistically significant difference between the groups (p=0.009).

Table 2 Effects of treatment on body composition by bioelectrical impedance analysis (BIA) and DEXA during the 0 to 6-month double-blind period. Absolute change from baseline over time by treatment group.

	Somatropin group			Placebo group			
	Baseline n=10	Change 0-6 months n=10		Baseline n=10	Change 0-6 months n=10		
Variable	**mean±SD**	**mean±SD**	**p***	**mean±SD**	**mean±SD**	**p***	**p****
Lean body mass (kg) BIA	51.8±12.6	2.8±1.3	**0.002**	53.5±10.1	0.5±3.3	n.s.	**0.028**
Lean body mass (kg) DEXA	45.5±10.6	2.7±1.4	**0.004**	49.0±10.5	0.4±1.6	n.s.	**0.009**

p* = p-value within group
p** = p-value between groups

Circumferences

The effects on circumferences are shown in Table 3 below.

The mean value of waist circumferences at baseline was 93.1 cm for the somatropin group and 92.6 cm for the placebo group. After 6 months of treatment there was a decreasing trend of 2.4 cm for the somatropin group (p=0.068). The difference between the treatment groups was statistically significant (p=0.045).

Table 3 Effects of treatment on body circumferences during the 0 to 6-month double-blind period. Absolute change from baseline over time by treatment group.

	Somatropin group					Placebo group					
	Baseline n=10		Change 0-6 months n=10			Baseline n=10		Change 0-6 months n=10			
Variable	**mean**	**SD**	**mean**	**SD**	**p***	**mean**	**SD**	**mean**	**SD**	**p***	**p****
Waist (cm)	93.1	22.5	-2.4	3.4	0.068	92.6	12.8	1.2	4.4	n.s.	**0.045**
Hip (cm)	102.5	14.5	-1.8	2.6	0.070	100.8	9.0	0.2	3.0	n.s.	0.074
Waist/Hip ratio	0.9	0.1	0.0	0.0	n.s.	0.9	0.1	0.0	0.0	n.s.	n.s.

p* = p-value within group
p** = p-value between groups

Bone mineral density

Femur neck: For the somatropin group there was a decrease of 3.21% from the mean baseline value of 0.91 g/cm^2 (p=0.027). No change was noted for the placebo group. There was a statistically significant difference between the groups (p=0.006).

There were no significant changes in any of the other bone mineral density assessments within or between the two groups.

Physical exercise capacity

There were no statistically significant changes or differences in physical exercise capacity during the double-blind period.

Muscle Strength

Left leg: There were no statistically significant differences between the somatropin group and the placebo group.

Right leg: There were no statistically significant differences between the somatropin group and the placebo group.

IGF-I

As shown in the following diagram IGF-I increased significantly in subjects receiving GH. Most of the subjects normalized IGF-I levels and two individuals had super physiological levels of IGF-I. This latter trend was seen also in the extension studies suggesting that GH dose may be excesive high.

Figure 1 Individual IGF-I SDS

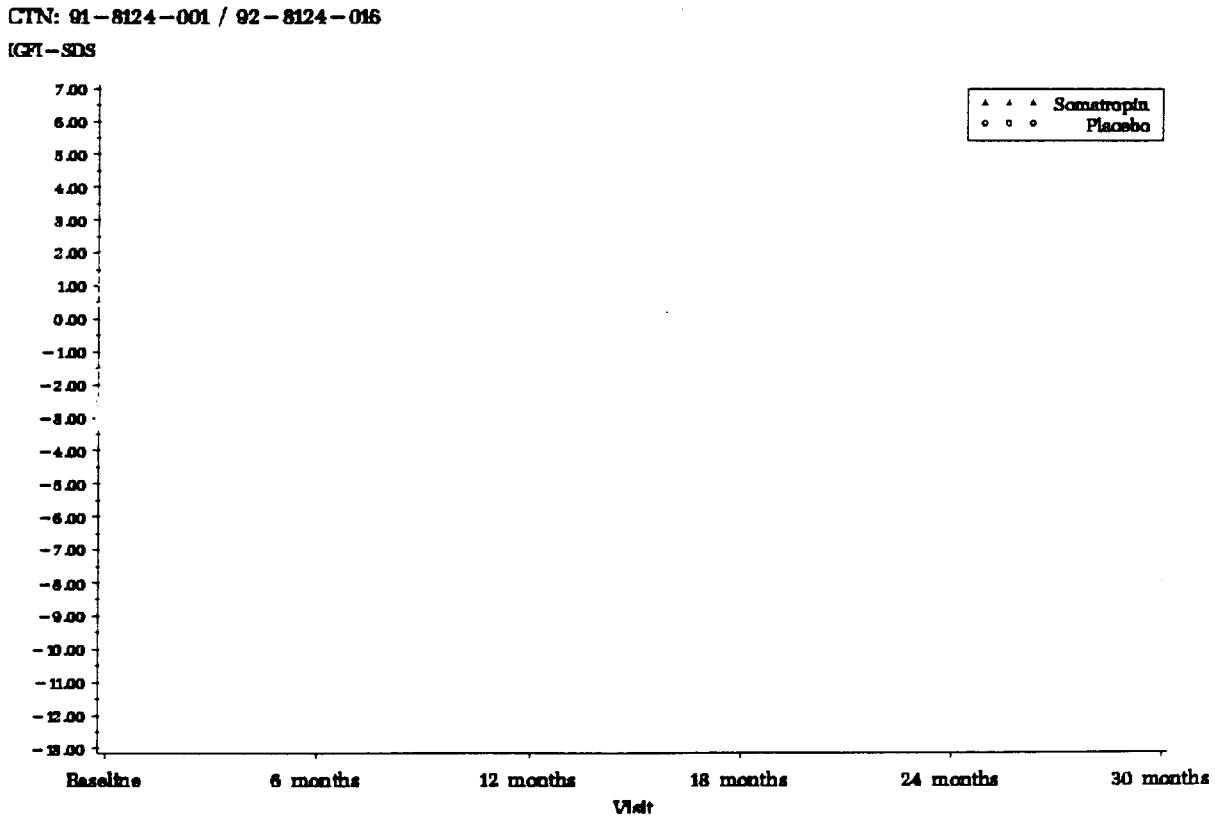

LIPIDS

No significant changes between groups were seen in all lipid profiles..

5.2 EFFICACY SUMMARY

At the end of the **double-blind study phase** those patients who received somatropin showed a statistically significant increase in total body water and muscle mass (lean body mass) and a statistically significant decrease in fat mass (body fat) resulting in an improved lean/fat ratio compared to the placebo treated patients. The bone mineral density in the femoral neck, decreased statistically significantly. The IGF-I levels as well as the IGF-SDS showed a statistically significant increase for the somatropin group as compared to the placebo group.

6.0 Safety

6.1 CLINICAL SAFETY VARIABLES

Physical examination

Double-blind period

There were no statistically significant differences in changes in height, weight, systolic blood pressure, diastolic blood pressure and pulse rate between the groups during the double-blind 6-month period.

6.2 LABORATORY SAFETY VARIABLES

Double-blind period

The fasting blood glucose at baseline was 4.5 mmol/l and 4.2 mmol/l for the somatropin group and placebo group, respectively. There was an increase of 0.6 mmol/l (p=0.010) in blood glucose for the somatropin group during the first 6 months.

The fasting insulin increased by 8.8 mU/l (p=0.006) for the somatropin group during the double-blind period. The mean baseline insulin was 12.2 mU/l and 17.9 mU/l for the somatropin group and placebo group, respectively.

The blood HbA1c at baseline was 5.3% for the somatropin group and 4.7% for the placebo group.

The mean baseline serum ALAT value was 0.62 IU/l and 0.52 IU/l for the somatropin group and placebo group, respectively. There was a decrease of 0.25 IU/l (p=0.004) for the somatropin group. There was a statistically significant difference (p=0.017) between the groups during the double-blind period. All changes in laboratory safety are given in Table 4.

Table 4 **Effects of treatment on laboratory safety variables during the 0 to 6-month double-blind period. Absolute change from baseline over time by treatment group.**

	Somatropin group					Placebo group					
	Baseline n=10		Change 0-6 months n=10			Baseline n=10		Change 0-6 months n=10			
Variable	mean	SD	mean	SD	p*	mean	SD	mean	SD	p*	p**
B-hemoglobin (g/100 ml)	137	13	2	5	n.s.	140	16	3	6	n.s.	n.s.
B-leukocytes (x 10 ^{9} /l)	6.1	1.3	0.1	1.0	n.s.	7.4	1.0	-0.1	0.9	n.s.	n.s.
B-thrombocytes (x 10 ^{9}/l)	210	51	17	43	n.s.	287	43	9	40	n.s.	n.s.
B-glucose, fasting (mmol/l)	4.5	0.9	0.6	0.6	**0.010**	4.2	0.3	0.2	0.3	0.098	0.069
f-Insulin (mU/l)	12.2	3.0	8.8	12.4	**0.006**	17.9	13.5	-0.6	11.4	n.s.	0.095
B-HbA1c (%)	5.3	2.0	-1.1	0.9	**0.006**	4.7	1.4	-0.7	0.8	**0.010**	n.s.
Creatinine (µmol/l)	74	14	2	7	n.s.	75	20	6	9	0.098	n.s.
S-Na (mmol/l)	141	3	2	2	0.063	140	1	2	2	**0.027**	n.s.
S-K (mmol/l)	4.0	0.3	0.0	0.3	n.s.	4.2	0.1	-0.1	0.2	n.s.	n.s.
S-ASAT (IU/l)	0.53	0.15	0.03	0.12	n.s.	0.41	0.11	0.10	0.20	n.s.	n.s.
S-ALAT (IU/l)	0.62	0.28	-0.25	0.26	**0.004**	0.52	0.19	0.08	0.30	n.s.	**0.017**
S-urea (mmol/l)	5.2	1.3	-0.4	1.0	n.s.	4.7	1.2	-0.3	1.6	n.s.	n.s.

p* = p-value within group
p** = p-value between groups

6.3 ADVERSE EVENTS

Adverse events were actively asked for in both studies. Adverse events related to fluid retention were specifically asked for. Codes for body system and preferred terms, according to WHO recommendations, have been used.

Double-blind period

A total of 22 adverse events were reported during the 0 to 6-month double-blind period; 8 patients in the somatropin group and 1 patient in the placebo group. The most frequently reported adverse events were arthralgia (8 events), stiffness of extremities (4 events), edema peripheral (2 events) and pain in extremities (2 events). All other events were single reports.

BEST POSSIBLE COPY

Table 5 Frequency of adverse events

Body system	Preferred term (no. of patients)	Number of events	Relation (by event)		Treatment groups (by event)		
			Unlikely	Poss/ Prob.	Placebo double-blind (0-6 m)	somatropin double-blind (0-6 m)	somatropin open (6-24/30 m)
Skin & Appendages disorders	Eczema (1)	1	-	-	-	-	1
	Psoriasis (1)	1	-	-	-	-	1
	Total	**2**	**0**	**0**	**0**	**0**	**2**
Musculo-Skeletal system disorders	Arthralgia (12)	14	4	10	-	8	6
	Back pain (3)	4	2	-	-	-	4
	Fracture (1)	1	1	-	-	-	1
	Myalgia (3)	4	-	3	-	1	3
	Stiffness of extremities (7)	8	-	8	-	4	4
	Tendinitis (1)	2	2	-	-	-	2
	Total	**33**	**9**	**21**	**0**	**13**	**20**
CNS & PNS disorders	Dizziness (1)	1	1	-	-	-	1
	Headache (1)	1	1	-	-	-	1
	Migraine (1)	1		-	-	-	1
	Total	**3**	**2**	**0**	**0**	**0**	**3**
Vision	Visual field defect (1)	1	-	-	-	-	1
	Total	**1**	**0**	**0**	**0**	**0**	**1**
Psychiatric	Depression (2)	2	1	-	-	-	2
	Total	**2**	**1**	**0**	**0**	**0**	**2**
Gastro-Intestinal disorders	Abdominal pain (1)	1	1	-	-	-	1
	Diarrhoea (1)	1	1	-	-	-	1
	Gastritis (1)	1	-	-	-	-	1
	Gastroenteritis (1)	1	1	-	-	-	1
	Hemorrhage rectum (1)	1	1	-	-	-	1
	Vomiting (1)	1	1	-	-	-	1
	Total	**6**	**5**	**0**	**0**	**0**	**6**
Metabolic & Nutritional disorders	Thirst (1)	1	-	1	-	-	1
	Total	**1**	**0**	**1**	**0**	**0**	**1**
Endocrine disorders	Adrenal insuff (4)	5	5	-	-	1	4
	Total	**5**	**5**	**0**	**0**	**1**	**4**
Cardio-vascular	Heart disorder (1)	1	1	-	-	-	1
	Hypertension (1)	1	1	-	-	-	1
	Total	**2**	**2**	**0**	**0**	**0**	**2**
Respiratory systems disorder	Bronchitis (2)	2	2	-	-	-	2
	Epistaxis (1)	1	1	-	-	1	-
	Pharyngitis (2)	2	2	-	-	1	1
	Upper resp tract infect. (9)	11	9	-	1	-	10
	Total	**16**	**14**	**0**	**1**	**2**	**13**
General disorders	Edema (1)	1	-	1	-	1	-
	Edema peripheral (7)	7	1	6	-	2	5
	Pain, extremities (3)	4	-	4	-	2	2
	Swelling, peripheral (1)	1	-	1	-	-	1
	Total	**13**	**1**	**12**	**0**	**5**	**8**
Resistance mechan. disorders	Herpes Zoster (1)	1	1	-	-	-	1
	Total	**1**	**1**	**0**	**0**	**0**	**1**
TOTAL		**85**	**40**	**34**	**1**	**21**	**63**

6.4 SERIOUS ADVERSE EVENTS

The listing of serious adverse events is shown in Table 6.

Serious adverse events were reported in 5 patients; four patients in the somatropin group and one patient in the placebo group. In two patients, no 8 (somatropin group) and patient no 20 (placebo group) serious adverse events occured during the double-blind period. In three patients (nos. 2, 8 and 20) serious adverse events were reported twice. A total of 8 serious adverse events were reported during 0 to 24/30 months study period.

BEST POSSIBLE COPY

Patient no. 2 was a 36-year old male ( ) who had abdominal pain partly due to cortisol deficiency. This was described as two separate events in the CRFs. The patient was completely recovered after 3 days in hospital with cortisone infusion.

Patient no. 8 was a 39-year old (,) female who had acute tonsillitis with high temperature requiring 24 hours in hospital for treatment with cortisol and antibiotics. This was described as two separate events in the CRFs. The patient recovered completely after 3 days.

Patient no. 10 was a 45-year old ( ) male who was observed in hospital for 8 days due to increasingly frequent attacks of dizziness following start of GH treatment. These attacks have occurred since 1987. No clinically significant findings were reported for this observation.

Patient no. 19 was a 57-year old male ( ) who had rectal bleeding. X-ray of colon showed diverticulosis which was the most likely reason for the bleeding. The patient recovered completely.

Patient no. 20 was a 47-year old female (. The patient had gastroenteritis leading to cortisol deficiency that required hospitalization. The patient improved rapidly after cortisol infusion and recovered completely.

BEST POSSIBLE COPY

Table 6 Listing of Serious Adverse Events

Pat no/ therapy group	Age	Sex	Serious Adverse Event	Pref term WHO	No. of days on Rx* at onset	Severity	Relation with study drug	Action taken with study drug	Outcome
2 somatropin	36	male	Abdominal pain	Abdominal pain	421	Severe	Unlikely	None	Recovered - no residual effects
2 somatropin	36	male	Cortisol deficiency	Adrenal insufficiency	421	Moderate	Unlikely	None	Recovered - no residual effects
8 somatropin	39	female	Acute tonsillitis	Pharyngitis	175	Severe	Unlikely	None	Recovered no residual effects
8 somatropin	39	female	second cortisol deficiency	Adrenal insufficiency	175	Severe	Unlikely	None	Recovered - no residual effects
10 somatropin	45	male	Attacks of dizziness	Dizziness	337	Mild	Unlikely	None	Recovered - no residual effects
19 somatropin	57	male	Rectal bleeding	Haemorrhage rectum	628	Severe	Unlikely	None	Recovered - no residual effects
20 pl/soma	47	female	Gastroenteritis	Gastroenteritis	64	Severe	Unlikely	None	Recovered - no residual effects
20 pl/soma	47	female	Cortisol deficiency	Adrenal insufficiency	526	Severe	Unlikely	None	Recovered - no residual effects

*Rx - somatropin treatment

6.5 SAFETY SUMMARY

Mean weight was increased by 3.3 kg and mean height by 1.3 cm after 24 months with somatropin therapy. No difference compared to placebo was seen during the double-blind phase.

Mean systolic and diastolic blood pressure did not change statistically significantly during the study.

Fasting levels of blood glucose, insulin, and glycated hemoglobin increased during somatropin treatment.

During the placebo-controlled study period trends towards statistically significant differences between the treatment groups were observed for blood glucose and insulin levels. Two patients, nos. 10 and 11, were regarded by the investigator as having clinically significant hyperglycemia at 21 and 18 months, respectively, into the study. It is noteworthy that these patients had elevated HbA1c values at baseline. No patient developed clinical signs of diabetes or withdrew from treatment.

During somatropin replacement, only one additional change of statistical significance was seen in clinical chemistry compared to baseline; a decrease in serum levels of alanine aminotransferase activity (ALAT). However, this change was not apparent during continued treatment.

Adverse events were reported in all 20 patients during somatropin therapy, of which 9 patients reported adverse events already during the double-blind phase (8 patients during somatropin treatment and 1 patient during placebo treatment). The most commonly reported symptoms during the study period were arthralgia (14 events/12 patients), upper respiratory tract infection (11 events/9 patients), stiffness of extremities (8 events/7 patients), edema peripheral (7 events/7 patients), adrenal insufficiency (5 events/4 patients), back pain (4 events/3 patients), myalgia (4 events/3 patients) and pain in extremities (4 events/3 patients). All other events were reported in one or two patients.

Serious adverse events were reported in 5 patients during somatropin replacement, including one who also experienced a serious adverse event during the initial placebo period. A total of 8 serious adverse events occurred: cortisol deficiencies in three patients, which in one (patient no. 8) occurred in relation to an infection, a tonsillitis, and in the other two in conjunction with abdominal pain and gastroenteritis, respectively; one patient had attacks of dizziness and another suffered from rectal bleeding from colon diverticulosis. No event was regarded as causally related to somatropin treatment.

7. DISCUSSION

All 20 patients had severe growth hormone deficiency as demonstrated by very low GH peaks after an appropriate stimulation test. Six of the patients, however, had not been GH-deficient for two years prior to the study start by the date of the diagnosis of their GH deficiency, but were deemed likely to have been growth hormone deficient for two years as they had other pituitary hormone deficiencies and were on stable hormone replacement therapy. No patient had isolated GH-deficiency.

The replacement therapy with thyroxine and sex hormones was unchanged during the study for the majority of the patients. Dose adjustments were made in cortisone medication during the study, but this was not regarded to influence the result of the study.

Compliance to treatment was generally good in most of the patients. However, two patients missed more than 10% of the intended number of injections. There was one withdrawal from treatment during the entire 24-month study period.

Adherence to the study protocol was generally good and without any deviation that might have affected the study results. Hence, the study can be regarded as adequate and well-controlled with respect to the patients studied, compliance to treatment and adherence to study protocol.

During the 6-month placebo-controlled study period, several changes in body composition occurred which are in line with literature data. Total body water, lean body mass, and lean body mass/fat mass ratios increased and the amounts of fat mass decreased with little variability between the results obtained by the different methodologies used: BIA and DEXA. In addition, waist circumference decreased.

The changes in body composition noted during the early phase of the study were essentially maintained during continued treatment; particularly, increases in lean body mass, total body water, and lean tissue of the trunk..

Serum IGF-I levels rose during treatment with a normalization in the majority of the patients. Sensitivity to treatment appears to be individual, as different circulating levels are achieved despite the fact that those with low, normal or high IGF-I levels received virtually identical somatropin dosages. As a group, the used dosages appears correct in order to normalize IGF-I levels, but for the individual patient there is an apparent need to individualize dosing in order to avoid super physiological IGF-I levels.

Treatment was generally well tolerated. One patient did not wish to continue into the long-term continuation study.

Adverse events related to fluid retention with symptoms of, primarily, fullness and sense of tightness of extremities and reported as edema, arthralgia, stiffness and myalgia, were frequent during somatropin treatment, particularly during the first months. Their frequency, intensity and duration are similar to those reported in the literature. Also, carbohydrate metabolism appeared to be affected during treatment with increased levels of fasting blood glucose and fasting insulin.

8. CONCLUSION

The results of this study indicate that GH treatment of GHD adults resulted in significant improvement in body composition particularly increments in lean body mass, decrements in fat and waist circumference. The bone mineral density in the femoral neck, however, decreased statistically significantly. The IGF-I levels as well as the IGF-SDS showed a statistically significant increase for the GH group as compared to the placebo group. GH doses should be individualized for each patinet in order no to induce super physiological levels of IGF-I.

APPEARS THIS WAY
ON ORIGINAL

Section Six

Study 91-131-08

APPEARS THIS WAY
ON ORIGINAL

STUDY: 91-131-08

1. OBJECTIVES

The primary objective of the study was to evaluate effects of Genotropin on body composition (changes in lean body mass versus fat).

Secondary objectives were: to compare GH replacement therapy in different patient groups; to evaluate the effect of GH on bone mineral density, muscle function and structure as well as cardiac and skeletal biochemistry.

2. PATIENTS, MATERIALS AND METHODS

2.1 Study design

The first six months of the study was randomized, double-blind with somatotropin treatment versus placebo. After the initial 6-month double-blind period, the study was continued as an open study for another 6 months during which all patients were treated with somatotropin.

2.1.1 Study population

Initially twenty patients were planned to be recruited and entered by this center. In the original protocol a total of two hundred GH deficient adults (males and females) were to be assessable for efficacy (change in body composition and quality of life) in this multiple independent trial. A randomization list for 300 patients was prepared to allow for withdrawals and patients showing poor compliance.

Inclusion criteria were:

- Growth hormone deficiency (isolated or as parts of hypopituitarism), likely to have existed for 24 months.

- Stimulated maximum peak growth hormone response less than 5 µg/L. Acceptable stimulation tests were arginine, glucagon, clonidine and insulin induced hypoglycemia. A test performed within 5 years prior to inclusion and after 20 years of age was accepted, if it could be verified from source data. Otherwise a new test was required.

- Age

- Patients with multiple pituitary deficiency should have been on stable replacement therapy (6 months).

- Informed consent obtained.

- Patient should have a normal resting ECG and no clinical evidence of ischemic heart disease.

Exclusion criteria were:

- Treatment with growth hormone during the last 12 months.

- Acute severe illness during the last 6 months.

- Pregnancy (should be excluded with test).

- Women of child-bearing age who were not using a reliable method of contraception.

- Chronic severe liver disease (gamma-GT and/or ASAT and/or ALAT twice upper limit of normal range laboratory values).

- Chronic severe renal disease (S-Creatinine>120 µml/L or repeated positive test for hematuria or proteinuria).

- Supine blood pressure >160 mmHg systolic or >100 mmHg diastolic.

- Diabetes mellitus (type I and II).

- A history of malignancy. (Patients who had received treatment for cranial tumors or leukemia, where the treatment caused the GHD, were accepted into the study).

- Chronic medication except pituitary replacement therapy, bromocriptine, contraceptives, treatment for mild hypertension and mild asthma. (Valid at study start). In a core protocol amendment the medication restriction was changed and "stable anticonvulsant therapy" was accepted. This restriction was further changed in a later amendment to "all concomitant medication is permitted but must be clearly documented. Where bone mineral density is being measured, any medication which may effect this, should be permitted".

- Suspected non-cooperativeness.

- Known/suspected hypersensitivity to m-cresol.

3. Therapy

3.1 TREATMENT SCHEDULE

The dose was 0.375 mg/kg/week during the first four weeks of each 6-month period and thereafter 0.75 mg/kg/week for five months. The weekly dose was divided into seven daily s.c. injections. Irrespective of body weight, maximum dose per day should not exceed 12 mg.

3.1.2 CONCOMITANT THERAPY

No other investigational drug could be used concomitantly with the test drug. The patients were not allowed to participate concurrently in any other clinical study.

The patients were allowed to take any drug judged necessary for treatment of any intercurrent disease of a less severe nature. Treatment for pituitary replacement therapy was allowed but was held as constant as possible. Adjustments on clinical grounds were allowed and had to be documented.

All chronic and temporary therapy was recorded in the Case Report Form.

3.2 Patient characteristics

The following general patient characteristics were reported at baseline: birth-date, sex and ethnic origin. Patient characteristic information at baseline regarding growth hormone deficiency were: year of diagnosis, date, GH peak and type of last stimulation test, and etiology. Other hormone deficiencies (TSH, ACTH, LH/FSH, ADH, other) were recorded. For patients with previous treatment with growth hormone the start and end date, dose and adverse events during the previous treatment period were recorded. Other chronic illnesses or sequela from previous diseases were also recorded.

3.3 Efficacy assessments

3.3.1 CLINICAL EFFICACY ASSESSMENTS

Body composition

The measurements of body composition were assessed by two methods:

1. Dual X-ray Absorptiometry (DEXA)

2. Deuterium labeled water

Bone mineral density

Assessments of bone mineral density were made of the hip, spine and forearm. As specified in center amendment, measurements of bone mineral density (DEXA), were performed. These additional tests were measurements of BMD (g/cm^2) of the lumbar spine L1-L4, femoral neck, femoral trochanter area, femoral intertrochanter, femoral Ward´s area, total hip area, 1/3 distal radius, and the whole body.

Muscle strength

Maximum voluntary contraction of the quadriceps was measured isometrically on the subject´s dominant leg. Each subject was seated in a specially adapted chair and asked to push each leg against a strap around the ankle, attached to a strain gauge and amplifier. This was repeated five times with a 30 seconds recovery between efforts. The highest two values were recorded (Newton).

3.4. Safety assessments

3.4.1 CLINICAL SAFETY ASSESSMENTS

Clinical safety examination consisted of physical examinations. A complete physical examination was performed at the screening visit, baseline, 6 and 12 months. A limited physical examination was performed at 3 and 9 months. Parameters monitored were similar to those assessed in the previous studies.

3.5 RESULTS

3.5.1 Protocol deviations

GH deficiency was diagnosed within less than two years before study start in two patients (nos. 78 and 99).

Five patients were not on stable hormonal replacement (nos. 86 and 95 estrogen; nos. 90 and 96 testosterone; no. 99 desmopressin).

Clinical chemistry and hematology tests outside reference limits at background were not repeated at baseline for 24 patients.

S-ALAT measurements were not made.

Total T3 and T4 were measured instead of free T3 and free T4, which were stated in the protocol.

Two patients in each group (somatotropin patients nos. 80 and 88, and placebo patients nos. 246 and 293) missed >10% of the injections during the first 6 months of the study. Two patients in the somatotropin group (nos. 80 and 132) and five patients in the pl/somatotropin group (nos. 81, 82, 241, 23 and 293) missed >10% of the injections during the last 6 months of the study.

Concomitant medication was not asked for at the first month's visit.

Two patients in the somatotropin group took osteoporosis medication concomitantly. Patient no. 99 took calciferol from baseline and throughout the entire study and patient no. 94 took etidronate sodium and calcium carbonate from the 6th study month.

Body composition was measured with deuterium labeled water. The tracer was incorrectly diluted and no useful information was obtained.

Quadriceps biopsies were taken, but the analysis has not yet been performed.

Magnetic resonance spectroscopy was planned for studying cardiac and muscle intracellular biochemistry. However, this had to be abandoned due to poor patient tolerability and cost.

3.6 Study population

3.6.1 NUMBER OF PATIENTS

Fifty-two patients with growth hormone deficiency were included in the study from April 15, 1992 to November 10, 1993. Twenty seven patients were randomized to the somatotropin group and 25 to the placebo group.

Four patients in the somatotropin group and two patients in the placebo group did not complete the study.

3.6.2 Treatment withdrawals

Six patients were withdrawn from the study.

Table 1 Patient withdrawals from the study

Pat. no.	Treatment group	Days in the study/on Rx drug	Reason(s) for withdrawal (Investigator's term)
74	Somatotropin	49/49	Adverse event: generalized aches and pains in muscle Consent withdrawn - interferes with work
95	Somatotropin	188/188	Consent withdrawn
244	Somatotropin	157/157	Non-compliance, too busy to come to hospital Consent withdrawn
247	Somatotropin	88/88	Adverse event: carpal tunnel syndrome
77	Pl/somatotropin	259/90	Adverse event: aches and pains in knees and ankles, swelling of hands and feet, stiffness after sitting and in the morning.
85	Pl/somatotropin	269/59	Adverse event: Swelling of hands and ankles pain in joints

APPEARS THIS WAY
ON ORIGINAL

3.6.3 PATIENT CHARACTERISTICS

Fifteen males and 12 females, (mean age 40 years), were included in the somatotropin group and 13 males and 12 female, (mean 39 years) were included in the placebo group. The mean number of years since GHD diagnosis was 10 years in the somatotropin group and 12 years in the placebo group. In two patients (nos. 99 and 78), less than two years had elapsed since diagnosis. This was, however, noted by the investigator to likely have existed for more than two years in one of the mentioned patients (no. 99). Peak GH response after provocation test are given in Table 2.

Table 2 Peak GH response

Peak GH response (mU/L)	**Somatotropin** n=27	**Placebo** n=25
≤ 3	20	19
>3 ≤6	2	3
>6 ≤9	5	2
>9 <10	0	1

The most common etiology in both groups were pituitary tumor (somatotropin: 18 of 27 vs. placebo: 13 of 25) whereas craniopharyngioma was more common in the placebo group (somatotropin: 2 of 27 vs. placebo: 7 of 25). The majority of the patients had multiple pituitary hormone deficiencies (somatotropin; 20 of 27 vs. placebo; 19 of 25).

APPEARS THIS WAY
ON ORIGINAL

Patient demographics are given in Table 3 below and individual data is given in Table 40 at the end of the report.

Table 3 Patient demographic data

	Somatotropin			Placebo		
	mean	SD	range	mean	SD	range
Sex (number of male/female)	15/12	-	-	13/12	-	-
Age (years)	40	11	21-60	39	11	22-60
Height (cm)	168	11	144-189	165	9	145-185
Weight (kg)	80	17	43-112	74	16	55-113
Body mass index	28	5	19-41	27	5	22-42
GH peak in provocation test (mU/L)	2.5	2.7	0.5-8.7	2.2	2.5	0.5-9.4
Years since diagnosis of GHD (years)	10	8	0-29	12	7	0-34
Age at diagnosis of GHD (years)	30	11	13-58	27	12	7-52
Earlier treatment with hGH (yes/no)	3/24	-	-	6/19	-	-
Etiology (number of patients):						
Pituitary tumor	18	-	-	13	-	-
Chraniopharyngioma	2	-	-	7	-	-
Trauma	2	-	-	0	-	-
Radiotherapy non-function tumor	1	-	-	0	-	-
Radiotherapy medulloblastoma	1	-	-	0	-	-
Radiotherapy post prolactinoma	1	-	-	1	-	-
Craniotomy for arachnoid cyst	1	-	-	0	-	-
Post-partum necrosis of pituitary	1	-	-	0	-	-
Radiotherapy for Cushing's disease	0	-	-	1	-	-
Idiopathic	0	-	-	3	-	-
Other hormone deficiencies (number of patients):						
ACTH deficiency yes/no	13/14	-	-	12/13	-	-
TSH deficiency yes/no	14/13	-	-	15/10	-	-
ADH deficiency yes/no	4/23	-	-	5/20	-	-
LH/FSH deficiency yes/no	18/9	-	-	15/10	-	-
Aldosterone deficiency yes/no	2/25	-	-	0/25	-	-
No other deficiency yes/no	6/21	-	-	5/20	-	-

BEST POSSIBLE COPY

3.7 CONCOMITANT MEDICATION

At study start, there was a restriction in the use of concomitant medication. Approved medications were pituitary replacement therapy, bromocriptine, contraceptives, treatment for mild hypertension and mild asthma. In core protocol amendment 3, dated April 13, 1993, the restriction was further changed to "all concomitant medication is permitted but must be clearly documented. Where bone mineral density is being measured, any medication which may effect this, should not be permitted".

3.7.1 Study medication

3.7.2 STUDY DRUGS

During the first four weeks of the study,
(target dose 0.375 mg/kg/week). During the following five months
(target dose 0.75 mg/kg/week) for all patients

except two in the somatotropin group. One of these patients (no. 102) had a dose reduction at 3 months to 0.36 mg/kg/week and one patient (no. 247) had a dose reduction before 3 months to 0.36 mg/kg/week. Three patients in the somatotropin group were withdrawn (nos. 74, 244, 247) during the first 6-month period and one patient (no. 95) was withdrawn at the 6th month's visit.

At the start of the 6-month open period the dosage was reduced for all patients to the dosage given at study start, the dose range being 0.36-0.39 mg/kg/week. The dose was increased back to 0.75 mg/kg/week after four weeks to reach full dosage for months 8 to 12 for all patients except in one in the somatotropin group (no. 103), who had a dose reduction at 9.5 months to 0.36 mg/kg/week and two patients in the placebo group. One of the placebo treated patients (no. 79) had the dose reduced to 0.36 mg/kg/week at 7 months and one patient (no. 131) never received the scheduled dose increase at 8 months. Two patients in the placebo group (nos. 77 and 85) were withdrawn during the 6 month open period.

3.7.3 COMPLIANCE

The number of missed injections was asked for at each visit.

4. Efficacy

The presentation of the efficacy results in the tables is divided into two parts. The first part covers the results from the initial 6-month placebo-controlled double-blind phase. The second part cover the results during somatotropin replacement therapy.

The absolute values presented in the text are mean values for each variable. Tables of all variables measured are presented. These tables include mean baseline values, mean changes during the study and statistical significance analysis. P-values $\leq$ 0.10 are given in the tables.

4.1 CLINICAL EFFICACY VARIABLES

Body composition

There was no statistically significant change in body weight during treatment, neither during the double-blind study period nor during the following treatment in any of the treatment groups.

Changes in body composition during the double-blind period are shown in Table 4. The variables measured were lean body mass, fat mass, lean/fat ratio.

In the somatotropin group there was an increase in lean body mass and a decrease in fat mass (both totally, and measured in the truncal area), and accordingly, there was an increase in the lean/fat ratio. No statistically significant changes were noted in the placebo group, and thus, taken together, the differences in these changes between the treatment groups were statistically significant.

Table 4 Effect of treatment on body composition (DEXA)

Variable	Somatotropin group					Placebo group					
	Baseline		Change 0-6 months			Baseline		Change 0-6 months			
	mean n=19	SD	mean n=17	SD	p-value within	mean n=16	SD	mean n=16	SD	p-value within	p-value between
Lean body mass (kg)	52.483	12.458	2.386	2.162	**0.001**	48.513	13.313	0.348	2.144	n.s.	**0.009**
Fat mass (kg)	23.370	10.330	-2.661	2.138	**<0.001**	22.159	8.408	0.472	2.158	n.s.	**<0.001**
Lean/Fat ratio	2.57	0.94	0.58	0.61	**<0.001**	2.38	0.89	-0.01	0.16	n.s.	**<0.001**
Fat mass in trunk area (kg)	11.106	5.349	-1.939	1.228	**<0.001**	9.914	3.357	0.433	1.735	n.s.	**<0.001**
Fat mass in trunk area (%)	27.51	9.47	-4.61	2.84	**<0.001**	27.35	5.65	0.37	2.68	n.s.	**<0.001**
Fat mass in whole body (%)	29.24	9.15	-3.20	2.60	**<0.001**	30.26	7.07	0.13	1.71	n.s.	**<0.001**
Lean body mass in trunk area (kg)	27.404	6.450	1.331	1.349	**0.001**	25.563	6.303	0.329	1.280	n.s.	**0.038**
Lean body mass in trunk area (%)	71.12	9.36	4.52	2.78	**<0.001**	71.14	5.64	-0.35	2.67	n.s.	**<0.001**
Lean body mass in whole body (%)	67.54	8.94	3.16	2.58	**<0.001**	66.37	7.01	-0.13	1.70	n.s.	**<0.001**

BEST POSSIBLE COPY

The changes in body composition in the somatotropin treatment group during the 6 month placebo-controlled period were maintained during continued open treatment (Table 5). In comparison to baseline values, the changes in all the measured variables were statistically significant.

Similar changes in body composition to those observed in the somatotropin treated group during the 6-month placebo-controlled period, were also seen in the formerly placebo treated patients (pl/somatotropin) once they received somatotropin (Table 5).

APPEARS THIS WAY
ON ORIGINAL

Table 5 **Effect of treatment on body composition (DEXA Scan) during the somatotropin period. Absolute change from baseline over time by treatment group. (For the original placebo group baseline = 6th-month's visit)**

		Baseline		Change 0-6 months			Change 0-12 months		
Variable	Group	mean	SD	mean	SD	p-value	mean	SD	p-value within
Lean body mass (kg)	somatotropin	52.483 n=19	12.458	2.386 n=17	2.162	**0.001**	2.573 n=16	2.573	**0.001**
	pl/ somatotropin	48.862 n=16	14.123	2.341 n=14	1.847	**0.001**	-	-	-
Fat mass (kg)	somatotropin	23.370 n=19	10.330	-2.661 n=17	2.138	**<0.001**	-1.561 n=16	2.823	**0.065**
	pl/ somatotropin	22.632 n=16	9.747	-1.500 n=14	1.671	**0.004**	-	-	
Elog lean body mass	somatotropin	3.932 n=19	0.249	0.044 n=17	0.042	**0.001**	0.047 n=16	0.045	**0.001**
	pl/ somatotropin	3.857 n=16	0.247	0.049 n=14	0.040	**0.001**	-	-	-
Lean/fat ratio	somatotropin	2.57 n=19	0.94	0.68 n=17	0.61	**<0.001**	0.52 n=16	0.65	**0.004**
	pl/ somatotropin	2.38 n=16	0.90	0.53 n=14	0.79	**<0.001**	-	-	-
Elog lean/fat ratio	somatotropin	0.869 n=19	0.430	0.180 n=17	0.152	**<0.001**	0.149 n=16	0.175	**0.006**
	pl/ somatotropin	0.802 n=16	0.365	0.151 n=14	0.163	**<0.001**	-	-	-
Fat mass in trunk area (kg)	somatotropin	11.106 n=19	5.349	-1.939 n=17	1.228	**<0.001**	-1.328 n=15	1.602	**0.015**
	pl/ somatotropin	10.346 n=16	4.483	-1.214 n=14	1.161	**<0.001**	-	-	-
Fat mass in trunk area (%)	somatotropin	27.51 n=19	9.47	-4.61 n=17	2.84	**<0.001**	-3.54 n=15	3.28	**0.001**
	pl/ somatotropin	27.73 n=16	6.51	-3.21 n=14	2.75	**<0.001**	-	-	-
Fat mass in whole body (%)	somatotropin	29.24 n=19	9.15	-3.20 n=17	2.60	**<0.001**	-2.69 n=15	3.01	**0.005**
	pl/ somatotropin	30.39 n=16	7.42	-2.67 n=14	2.40	**<0.001**	-	-	-
Lean body mass in trunk area (kg)	somatotropin	27.404 n=19	6.450	1.331 n=17	1.349	**0.001**	1.170 n=15	1.224	**0.005**
	pl/ somatotropin	25.892 n=16	6.944	0.821 n=14	8.555	**0.005**	-	-	-
Lean body mass in trunk area (%)	somatotropin	71.12 n=19	9.36	4.52 n=17	2.78	**<0.001**	3.42 n=15	3.23	**0.002**
	pl/ somatotropin	70.79 n=16	6.52	3.17 n=14	2.74	**<0.001**	-	-	-
Lean body mass in whole body (%)	somatotropin	67.54 n=19	8.94	3.16 n=17	2.58	**<0.001**	2.61 n=15	2.95	**0.005**
	pl/ somatotropin	66.24 n=16	7.34	2.57 n=14	2.42	**<0.001**	-	-	-

BEST POSSIBLE COPY

Waist and hip circumferences

There were no significant difference between the groups in waist, hip and waist/hip ratio.

Bone mineral density

Bone mineral density (BMD) was measured by DEXA in lumbar spine L1-L4, femoral neck, femoral trochanter, femoral intertrochanter, femoral Ward's area, total hip area, 1/3 distal radius as well as the whole body. Changes did not reach statistical significance, neither when compared to baseline values for each treatment group, nor when the changes in the two groups were compared.

Muscle strength and exercise tolerance

There were no statistically significant differences of change in quadriceps muscle strength between the groups.

Maximal heart rate decreased in the somatotropin group and increased in the placebo group. In the placebo group maximum oxygen uptake decreased during the placebo period ($p<0.02$). A similar but statistically insignificant decrease was also seen in the somatotropin group. However, during open somatotropin treatment the pl/somatotropin group had a significant increase of maximum oxygen uptake ($p<0.049$, VO_2 ml/kg/min. and $p<0.003$, VO_2 L/min.) whereas no significant improvement could be seen in the somatotropin group.

4.2 LABORATORY EFFICACY VARIABLES

Changes in IGF-I and IGF-I SDS are given in Tables 6 and 7. There was a significant difference between the groups in the change of IGF-I ($p<0.001$) and IGF-I SDS ($p<0.001$). IGF-I and IGF-I SDS increased significantly for the somatotropin group compared to baseline during the double-blind phase, as well as in the former placebo group during the 6-month open somatotropin treatment.

Table 6 Effect of treatment on IGF-I during the 0-6 months double-blind period. Absolute change from baseline over time by treatment group

Variable	Somatotropin group					Placebo group					p-value between
	Baseline		Change 0-6 months			Baseline		Change 0-6 months			
	mean	SD	mean	SD	p-value within	mean	SD	mean	SD	p-value within	
IGF-I	109 n=27	56	210 n=24	148	<0.001	84 n=25	48	-3 n=23	26	n.s.	<0.001
IGF-I SDS	-2 n=27	2	4 n=24	2	<0.001	-3 n=25	2	0 n=25	1	n.s.	<0.001

BEST POSSIBLE COPY

Table 7 **Effect of treatment on IGF-I during the somatotropin period. Absolute change from baseline over time by treatment group. (For the original placebo group baseline = 6th month's visit)**

		Baseline		Change 0-6 months			Change 0-12 months		
Variable	Group	mean	SD	mean	SD	p-value	mean	SD	p-value within
IGF-I	somatotropin	109 n=27	56	210 n=24	148	<0.001	184 n=21	133	<0.001
	pl/ somatotropin	81 n=25	43	137 n=23	117	<0.001			
IGF-I SDS	somatotropin	-2 n=27	2	4 n=24	2	<0.001	4 n=21	2	<0.001
	pl/ somatotropin	-3 n=25	2	3 n=22	2	<0.001			

Number of patients within, above and below the age matched reference limits are given in Table 8. The months in the table refer to the visit months i.e., the original baseline is used for the pl/somatotropin group.

Table 8 **Number of patients with IGF-I values above/below/between age-matched reference limits at each visit**

	Somatotropin			Pl/somatotropin		
Visits	Below ref. limit	Within ref. limit	Above ref. limit	Below ref. Limit	Within ref. limit	Above ref. limit
Baseline	12	15	0	16	9	0
6 months*	1	11	12	18	7	0
12 months	1	10	10	6	10	6

* 6th month's visit= redefined "baseline" for the pl/somatotropin group

4.3 EFFICACY SUMMARY

Measurement of body composition with DEXA showed statistically significant differences between the groups in all variables measured. Lean body mass increased, fat mass decreased and lean/fat ratio increased in the somatotropin group. These changes were maintained during continued treatment.

There was no difference between the groups in waist, hip and waist/hip ratio during the double-blind phase, nor during continued treatment.

In BMD there was a significant difference between the groups in the measurements of the whole body. There was a decrease in the somatotropin group and an increase in the placebo group.

There were no statistically difference of change in quadriceps muscle strength between the groups during the double-blind period, though a significant increase was observed in both groups. No significant change was observed in the exercise tolerance test.

IGF-I and IGF-I SDS values showed statistically significant differences in changes between the groups. IGF-I and IGF-I SDS increased in the somatotropin group. The increase in IGF-I and IGF-I SDS values were maintained throughout the study.

5. Safety

5.1 CLINICAL SAFETY VARIABLES

The systolic blood pressure in the somatotropin group decreased by 6 mmHg after 6 months compared to baseline (p=0.046), which remained unchanged after 12 months (p=0.009). There were no significant changes in diastolic blood pressure or pulse.

Weight was unchanged in both groups, both during the double-blind period and during the open period.

Height increased compared to baseline in the somatotropin group with 0.6 cm (p=0.001).

5.2 Laboratory safety variables

A significant difference between the treatment groups was observed in HbA1c at 6 months (p= 0.011). The mean value increased significantly compared to baseline in the somatotropin group(p=0.021), while there was a small decrease in the placebo group.).

Serum glucose levels and thrombocytes increased during the open phase (6-12 months) in the former placebo group (p=0.001 and 0.001, respectively).

Serum potassium and ASAT in the GH group, decreased compared to baseline at 12 months (p=0.023 and 0.034, respectively).

APPEARS THIS WAY
ON ORIGINAL

Laboratory values outside reference limits

The values outside reference limits described per laboratory test variable and the values given in the tables were measured anytime during the trial i.e., from background/baseline to the last assessment. Number of patients with values outside reference limits before and during treatment, respectively, are given in Table 9 for the double-blind phase and Table 10 for the somatotropin phase. In these tables each patient with abnormal values is counted once per interval (before/during therapy). Therefore, minor discrepancies between the numbers given in these tables and the numbers given in the following text may be found.

Table 9 Patients with abnormal values in clinical chemistry and hematology tests, before and/or during therapy, respectively

	Somatotropin				Placebo			
	Before therapy		During therapy		Before therapy		During therapy	
	above	below	above	below	above	below	above	below
B-Hemoglobin	1	6	1	6	0	6	0	6
B-Leukocytes	3	0	2	2	0	0	0	0
B-Thrombocytes	0	2	0	1	0	1	0	2
B-Glucose (fasting)	0	12	0	8	0	8	0	7
HbA1c	0	1	0	0	0	0	0	0
S-Creatinine	6	0	2	0	6	0	8	0
S-Sodium	0	0	0	1	0	0	0	0
S-Potassium	0	2	0	4	0	1	0	1
S-ASAT	2	0	0	0	0	0	2	0
S-Total T4	1	1	2	4	1	0	1	0
S-Total T3	2	0	0	0	0	1	0	0

Table 10 Number of patients with values outside reference limits before and during therapy, respectively

	Somatotropin			
	Before therapy		During therapy	
	above	below	above	below
B-Hemoglobin	1	14	2	18
B-Leukocytes	4	0	2	2
B-Thrombocytes	0	4	0	2
B-Glucose (fasting)	0	22	3	17
HbA1c	0	1	0	2
S-Creatinine	14	0	8	0
S-Sodium	0	0	0	1
S-Potassium	0	4	0	8
S-ASAT	4	0	0	0
S-Total T4	3	1	2	6
S-Total T3	2	1	0	1

5.3. ADVERSE EVENTS

Adverse events were actively asked for and adverse events related to fluid retention were specifically sought. Events have been listed in chronological order.

BEST POSSIBLE COPY

A total of 125 adverse events were reported in the somatotropin group and 57 adverse events were reported in the placebo group during the 0-6 months double-blind period. The most frequently reported symptoms (>5 events in any of the groups) during the double-blind phase were peripheral swelling (somatotropin: 18, placebo: 4), pain in the extremities (somatotropin: 11, placebo: 1), headache (somatotropin: 8, placebo: 5) and fatigue (somatotropin 5, placebo: 0). Eleven events of peripheral swelling were reported during the double-blind phase in one patient and 4 events of pain in the extremities were reported in one patient, both in the somatotropin group.

During the 6-12 month period there were 153 adverse events reported in both groups. Adverse events were totally reported in 46 of the patients in the study.

The most frequently reported adverse events during the entire study (>10 events in any of the groups) were respiratory tract infections, peripheral swelling, pain/pain extremities, headache, stiffness generalized/stiffness extremities, fatigue, arthralgia and paraesthesia.

Forty-nine events of respiratory disorders were reported in 29 patients, whereof 7 events were reported during the double-blind period in the placebo group.

Peripheral swelling was reported as 38 events in 14 patients. Seventeen events of peripheral swelling were reported in a single patient. Six events were reported from among three patients in the placebo group during the double-blind phase.

Headache was reported in 19 events in 11 patients, whereof five events in three patients in the placebo group during the double-blind phase.

Stiffness generalized/stiffness extremities was reported in 15 events in 12 patients. None of the events was reported in the placebo group during the placebo phase.

Fatigue was reported in 14 events in 10 patients during the somatotropin phase.

Arthralgia was reported in 13 events in 10 patients during the somatotropin treatment.

Paraesthesia was reported in 12 events in six patients, while four events were reported in two patients during the double-blind phase.

5.4 SERIOUS ADVERSE EVENTS

Serious adverse events (SAEs) were reported in two patients (nos. 87 and 98) during the 0-6 month double-blind phase. Both were reported in the somatotropin group. A third patient (no. 88) had three SAEs during the second 6 months' period of the study. A causal relationship with study drug was deemed in two of the SAEs: carpal tunnel syndrome and headache (no. 88). Patients with SAE are given in Table 11.

Table 11 Patients with Serious Adverse Events during the trial

Patient no/ therapy group	Age	Sex	Serious Adverse Event	Treatment duration at onset	Severity	Relation with study drug	Action taken with study drug	Outcome
87/ Somatotropin	32	F	Meningitis	166 days	Severe	Unlikely	Interrupted	Complete recovery
88/ Somatotropin	39	F	Carpal tunnel syndrome	211 days	Moderate	Possible	Interrupted	Complete recovery
			Removal of polyp from right sinus	317 days	Moderate	Unlikely	None	Complete recovery
			Headache	332 days	Severe	Possible	None	Recovery with sequale
98/ Somatotropin	23	F	Intranasal antiostomy sinus.	22	Moderate	Unlikely	None	Complete recovery

BEST POSSIBLE COPY

Patient no. 87 was a 32-year-old female who had meningitis for 12 days. She was hospitalized and treated with benzylpenicillin and rifampicin. The SAE was deemed to be life threatening. The patient recovered completely.

Patient no. 88 was 39-year-old female who had three different serious adverse events.

- The first SAE was an operation for carpal tunnel syndrome and she was hospitalized for one day.
- The second SAE was a removal of a polyp from right sinus. She was hospitalized for five days.
- At the third SAE she was hospitalized for 14 days due to severe headache. No cause was found.

Patient no. 98 was a 23-year-old female who had an intranasal antrostomy and sinus wash-out for maxillary sinusitis.

Patients withdrawn due to adverse events are given in Table 12.

Table 12 Patients who were withdrawn due to adverse events from the study

Pat. no.	Treatment group	Days in the study/on Rx drug	Reason(s) for withdrawal
74	Somatotropin	49/49	Generalized aches and pains in muscle Consent withdrawn - interferes with work
247	Somatotropin	88/88	Carpal tunnel syndrome
77	Pl/somatotropin	259/90	Aches and pains in knees and ankles, swelling of hands and feet, stiffness after sitting and in the morning.
85	Pl/somatotropin	269/59	Swelling of hands and ankles, pain in joints

5.6 SAFETY SUMMARY

There were no statistical significant differences between the groups in blood pressure, heart rate, weight or height during the double-blind phase.

HbA1c increased during somatotropin treatment in both groups. These changes were generally within normal range limits.

Adverse events were reported in 46 patients. The most frequently reported adverse events were (events/patients) respiratory tract disorders (49/29), peripheral swelling (38/14), headache (19/11), stiffness generalized/stiffness extremities (15 /12), fatigue (14/10), arthralgia (13/10), and paraesthesia (12/6)

Four patient withdrew due to adverse events during somatotropin replacement (myalgia, carpal tunnel syndrome, arthralgia+peripheral swelling+stiffness and arthralgia+peripheral swelling, respectively).

Serious adverse events were reported in three patients during somatotropin replacement therapy. One patient had 3 serious adverse events. Two SAE were deemed to be possibly related to somatotropin replacement (carpal tunnel syndrome and headache). The other SAE were meningitis, removal of polyp from right sinus and intranasal antrostomy of sinus.

6. DISCUSSION

All patients had pronounced growth hormone deficiency as demonstrated by low serum GH peaks after an appropriate stimulation test. Two patients however, had not been diagnosed as growth hormone deficient for two years, although one was regarded as likely having been growth hormone deficient for two years. Most of the patients were on stable replacement therapy for other

pituitary hormone deficiencies. In five patients, however, some changes in estrogen, testosterone, and desmopressin therapies, were made. Two of the patients received concomitant medications possibly interfering with the results of the bone mineralization assessments. Compliance was generally good. The results can be regarded as a representative for GH replacement therapy for adult patients with GH deficiency.

During the 6-month placebo-controlled study period, several changes in body composition occurred. Thus, the amount of fat mass decreased and lean tissue increased, without affecting body weight. Theses changes were noted both for the truncal area as well as for the whole body, and resulted in an increase in the lean/fat ratio. These changes in body composition were maintained during continued treatment.

Serum levels of IGF-I rose during treatment from relatively low or normal values according to age and sex-matched control levels to normal, and for some patients to high levels. The sensitivity to growth hormone replacement seems to vary widely among individuals, and even if, according to group responses, the dosages used appear to be correct, dosing should be individualized for each patient to avoid super physiological levels of IGF-I. Treatment was generally well-tolerated. Six patients withdrew from the study, four of whom because of adverse events, all likely related to fluid retention induced by the treatment. In fact, the majority of reported adverse events that were regarded as possibly or probably related to the therapy by the investigator were those related to fluid retention: edema, arthralgia, stiffness, myalgia, paraesthesia, and myalgia. Their frequency, intensity and duration were similar to those reported in the literature.

7. CONCLUSSION

GH treatment in subjects with adult GH deficiency resulted in increments in lean body mass and decrements in fat tissue. These changes were maintained during the extension studies. Normalization of IGF-I was attained in the GH treated patients. GH dosing should, however, be individualized in order no to reach super physiological changes in this marker.

Section Seven

Study 92-8124-011

APPEARS THIS WAY
ON ORIGINAL

Study 92-8124-011

1. OBJECTIVES

Primary: To determine the effect of somatotropin replacement therapy on body composition in GH-deficient adults as compared to placebo treatment.

Secondary: To evaluate the effect of somatotropin replacement therapy on serum IGF-I, hand grip strength, bone mineral density and lipid metabolism as compared to placebo treatment.

To elucidate the safety of somatotropin replacement therapy.

2. PATIENTS, MATERIALS AND METHODS

2.1 Study design

The first 6 months of the study were randomized and double-blind with Genotropin treatment versus placebo.

After the initial 6-month double-blind phase, the study was continued as an open study for another 6 months, and all patients in both groups received Genotropin.

2.2 Study population

Twenty patients (males and females), 10 in each treatment group, assessable for efficacy with GH deficiency acquired in childhood or adulthood, were included in the trial. A randomization list for 30 patients was prepared to allow for drop-outs, withdrawal and patients showing bad compliance.

Inclusion and exclusion criteria were similar to the previous studies

2.3.1 STUDY PRODUCT

Genotropin 16 IU for

2.3.2. COMPLIANCE

The number of missed injections was asked for at each visit and documented in the Case Report Forms.

2.3.4. CONCOMITANT THERAPY

Pituitary replacement therapy, bromocriptine, contraceptives, therapy for mild hypertension and mild asthma were allowed; other chronic concomitant medication was not permitted. An attempt was made to hold treatment for pituitary replacement constant. Adjustments on clinical grounds were allowed but were documented in the CRFs.

No other investigational drugs were allowed to be used concomitantly with the test drug. The patients were not allowed to participate concurrently in any other clinical study. The patients were allowed to take any drug judged necessary for the treatment of any intercurrent disease.

2.3.5 Patient characteristics

Patients, males or females, between the years who are growth hormone deficient, with a stimulated maximum peak GH response less than 5μg/L, were included.

2.4 Efficacy assessments

2.4.1 CLINICAL EFFICACY ASSESSMENTS

Body composition and bone mineral density

Dual-energy projection methods have been used over the past decade for the measurement of bone and soft-tissue composition *in vivo*. Dual-photon absorptiometry (DPA) using a radio-nuclide source has been performed for the measurements of bone mineral density (BMD) and bone mineral content (BMC), both locally in the spine and proximal femur, and also for the total body. Total body bone mineral content correlates highly with the actual skeletal mass and with total body calcium by neutron analysis *in vivo* because calcium is a constant fraction (about 37%) of the mineral component in bone. One by-product of such total DPA scans is a measure of the relative lean/fat composition in areas where no bone is present.

DEXA was also used to assess these parameters.

Additional investigation

Hand grip strength assessment using a hand dynamometer was performed on all patients.

2.4.2. LABORATORY EFFICACY ASSESSMENTS

The following laboratory assessments were performed:

- IGF-I
- total-cholesterol
- LDL-cholesterol
- HDL-cholesterol
- triglycerides

2.5 Safety assessments

Safety assessments were performed as in previous studies.

2.6 RESULTS

2.6.1 Protocol deviations

Several protocol deviations were recorded by the investigators. Most of them were the result of the need of medications due to either the underlying condition of intercurrent disorders. Other deviations included GH dosing changes and evaluations that did not specifically met the timing of the original protocol. None of these deviations appear to be relevant.

Diagnosis of GH deficiency

Diagnosis of GH deficiency less than 24 months prior to baseline for pats. nos. 2, 6, 8, 12, 13, 14, 16, 18 and 19. Comments were made by the investigator that all patients were likely to have had GH deficiency at least 24 months prior to study inclusion based on the diagnosis dates of other pituitary hormone deficiencies.

Deviations in assessments

TSH and urea determinations were included in the CRF, but the assessments were not noted in the protocol or in the protocol amendment.

Assessments of HDL-cholesterol, LDL-cholesterol, Apolipoprotein A and B, ALAT, spine bone mineral density and femoral neck bone mineral density were not performed.

2.7 Study population

NUMBER OF PATIENTS

A total of 20 (10 Genotropin and 10 placebo) patients with growth hormone deficiency were randomized and included in the study. Nineteen included patients (excluding patient no. 17) completed the 6-month double-blind study period (10 Genotropin and 9 placebo) and 17 patients (excluding patient nos. 11, 17 and 19) completed the following 6-month open-label study period (9 Genotropin and 8 former placebo).

TREATMENT WITHDRAWALS

There were three withdrawals from treatment, as follows:

Patient no. 11 (Genotropin group) withdrew after the 9th month's visit, 282 days after the baseline visit, due to worsening of carpal tunnel syndrome.

Patient no. 17 (placebo group) withdrew 21 days after the baseline visit due to personal reasons; the patient felt uncomfortable with daily injections.

Patient no. 19 (placebo group) withdrew after the 6th month's visit, 210 days after the baseline visit, due to a relapse of Cushing's Disease.

PATIENT CHARACTERISTICS

There were 4 females and 6 males in the Genotropin group, and 2 females and 8 males in the placebo group, with a group mean age of 46.8 ± 7.9 years and 39.6 ± 12.2 years, respectively. Group mean values for height and weight were similar for both groups; 167.0 ± 11.7 cm and 82.0 ± 16.1 kg; 168.0 ± 12.4 cm and 78.9 ± 26.6 kg, for the Genotropin and placebo groups, respectively.

The mean value for the GH peak at the latest stimulation test was similar for the two treatment groups, 0.6μg/L. The duration of the growth hormone deficiency was estimated to be at least 2 years for all patients when the onset of GHD was defined according to the first diagnosed pituitary deficiency. With regard to etiology and other pituitary hormone deficiencies, no differences between the study groups were noted. In 9 of 10 patients in both study groups, at least two other pituitary functions were affected.

2.8. CONCOMITANT THERAPY

Patients with hormonal deficiencies, other than GH, continued their replacement therapy as before entering the trial. Three patients with gonadal deficiencies were not replaced and one of them having a borderline thyroid disorder did not receive thyroid either.

2.8 Study medication

STUDY PRODUCTS

During the first four weeks of the study, the GH
(target dose 0.375 mg/kg/week). After the first four weeks,
(target dose 0.75 mg/kg/week). Prior to the 6th month's visit, the study dose was reduced and/or temporarily interrupted in seven

patients due to adverse events; pats. no. 4 (fluid retention), no. 11 (worsening of carpal tunnel syndrome), no. 12 (musculo-skeletal aches and pain and increased serum IGF-I above normal range), no. 13 (edema), no. 16 (injection site reaction), no. 18 (lethargy and aggression) and no. 19 (weight gain and fluid retention).

At six months the dose . (target dose 0.375 mg/kg/week). After six months and 4 weeks, the (target dose 0.75 mg/kg/week). Between the 6th and 12th month's visits, six patients had a reduction and/or temporary interruption in Genotropin treatment due to adverse events: pats. no. 6 (fluid retention), no. 9 (fluid retention), no. 12 (increased serum IGF-I above normal range), no. 13 (edema), no. 14 (IGF-I above normal range), and no. 18 (hyperactivity). One patient, no. 11 (worsening of carpal tunnel syndrome), was permanently withdrawn from treatment after the 9th month's visit.).

For patient no. 1, the actual dose was limited, according to the protocol, after the first 4 weeks of the each six-month period to 0.57 and 0.563 mg/kg/week, respectively, (target dose 0.750 mg/kg/week) due to excessive body weight.

2.9. COMPLIANCE

The number of missed injections was requested at each visit. No injections were missed by 3 of 10 Genotropin patients during the first 6-month study period, while the other seven patients missed from In the placebo group, no injections were missed for 4 of 9 patients, while the other five patients missed from

During the open study period (months 7 to 12), 4 of 9 Genotropin patients missed no injections whereas the other five Genotropin patients missed from 0.6 to 4.2%. For the 8 patients in the former placebo group, no injections were missed by 3 patients, 4 patients missed from 0.6 to 5.4% of the injections, and one patient missed 13.7% of the injections. Overall, during the entire 12-month study period, 2 of 9 Genotropin patients missed no injections, and the other seven missed from 0.6 to 4.9% of the injections.

The most frequent reason given by the patient regarding missed injections was forgetting to take the injections, while the second most common reason concerned adverse events.

3. EFFICACY

3.1. CLINICAL EFFICACY VARIABLES

Body composition and bone mineral density

Table 2 below shows for each variable mean ± SD values at baseline and the mean values for the respective changes (+ and - indicates an increase and decrease, respectively during the period shown).

BEST POSSIBLE COPY

Table 2. **Effects on body composition during treatment**

	Baseline		months 0 - 6 double-blind period			months 7 - 12 open period		months 7 - 12 open period(¤)		months 0 - 12 total period	
	Genotropin	placebo	Genotropin	placebo	p-value between	Genotropin	p-value within	former placebo	p-value within	Genotropin	p-value within
Lean Body Mass, kg											
2-comp. Model	47.3±12.2	48.3±15.6	+0.2	-0.0	ns	+0.6	0.098	+2.2	ns	+0.6	ns
Body Fat, kg											
2-comp. Model	31.0±9.6	26.0±9.4	-1.7	+1.2	**0.046**	-1.9	**0.027**	-1.3	ns	-3.1	**0.008**
Lean/Fat ratio											
2-comp. Model	1.61±0.47	1.94±0.55	+0.04	-0.02	ns	+0.14	**0.039**	+0.48	0.055	+0.19	**0.004**

(¤) during the 6-month-long open period, the former placebo group was receiving Genotropin therapy.

Lean body mass

No significant change in lean body mass was observed in Genotropin-treated patients compared to placebo-treated patients after 6 months of treatment (months 0 to 6). Lean body mass was not significantly changed for either of the treatment groups during either of the study periods.

Body fat mass

A significant change in body fat mass was achieved in the Genotropin group compared to the placebo group (p=0.046) after 6 months of treatment (months 0 to 6), whereas no significant change was noted within either group. During the following 6-month open period, a significant decrease in body fat mass was observed for the Genotropin group (p=0.027), but not for the former placebo group. Body fat mass was significantly decreased (p=0.008) for the Genotropin group during the total 12-month study period.

Lean/fat ratio

No significant change in the lean/fat ratio was seen for the Genotropin group compared to the placebo group after 6 months of treatment, nor was there any change within either group. However, during the following 6-month open period, there was a significant increase in the lean/fat ratio for the Genotropin group (p=0.039). In addition, a trend towards a significant increase (p=0.055) in the lean/fat ratio was observed for the former placebo group during the open period. During the total 12-month period, the lean/fat ratio was significantly increased within the Genotropin group (p=0.004).

Waist, Hip Circumferences and Waist/Hip Ratio

No significant changes in waist and hip circumferences, or the waist/hip ratio, were observed when comparing the Genotropin and placebo groups after 6 months of

treatment. There were no significant changes for the placebo group for any of these three variables after 6 months of treatment. A significant decrease in waist circumference was achieved within the Genotropin group (p=0.020) during the first 6-month period, which was also present after 12 months (p=0.020), but the values measuring change within the open study period (months 7-12) were not in themselves significant. A trend towards a significant decrease (p=0.055) in the waist/hip ratio was observed for the Genotropin group during the first 6-month period. No significant decrease in hip circumference was seen for the Genotropin group for any period.

Bone mineral density

No significant change in total body bone mineral density was observed when comparing Genotropin-treated patients to placebo-treated patients after 6 months of treatment. A significant decrease was observed within the Genotropin group during the 6-month double blind period (p=0.010) and the total 12-month study period (p=0.012). No significant change occurred in total body bone mineral density for either treatment group during the 6-month open period.

Additional investigations

Hand grip strength

A statistically significant reduction in hand grip strength (p=0.0495) was noted for placebo-treated patients compared to Genotropin-treated patients after 6 months of treatment. No significant change in hand grip strength was observed within either of the treatment groups during any of the study periods.

3.2. LABORATORY EFFICACY VARIABLES

Serum IGF-I

Central Analysis

At baseline, 5 of 10 patients in the Genotropin group and 6 of 10 patients in the placebo group had a IGF-I SDS value below the normal limit (- 2).

Serum IGF-I was assessed in 10 Genotropin-treated patients and 9 placebo-treated patients after 6 months and after 12 months in 9 and 8 patients in the Genotropin group and former placebo group, respectively. Missing values are due to patient withdrawals.

A significant increase in serum IGF-I was achieved in the Genotropin treated group compared to the placebo treated group (p=0.0007) during the 6-month double-blind study period. This rise in serum IGF-I was significant also within the Genotropin group (p=0.002) after 6 months of treatment. After 6 months of treatment, serum IGF-I was within or above the age-matched reference range for all patients in the Genotropin group. For the placebo group, the same six patients who had IGF-I SDS values below -

2 at baseline still had a value lower than - 2 after placebo treatment. A significant increase in S-IGF-I was achieved within the former placebo group (p=0.008) during the following 6-month open period.

During the entire 12-month study period, serum IGF-I was significantly improved within the Genotropin group (p= 0.004).

At 12 months all patients in the Genotropin group and all patients but one in the former placebo group (no. 8) had a IGF-I SDS value within or above normal range (± 2).

Lipid metabolism - cholesterol and triglycerides

After 6 months of treatment, no significant change in cholesterol was observed for the Genotropin group compared to the placebo group. A significant decrease in total cholesterol was achieved for Genotropin treated patients (p=0.027) during the total 12-month trial period, whereas no significant change was noted within any single six-month period for either group.

Above normal-range triglycerides values were seen in one patient in the Genotropin group and 3 patients in the placebo group before treatment start. No significant changes in triglycerides were observed in Genotropin-treated patients compared to placebo-treated patients after 6 months of treatment nor were any significant changes seen for either treatment group during any study period.

3.3 EFFICACY SUMMARY

During the 6-month double-blind treatment period, a significant decrease in body fat was achieved in Genotropin-treated patients compared to placebo treated patients, but no changes in lean body mass were observed. After 6 months of treatment, serum IGF-I was significantly higher in the Genotropin group compared to the placebo group. Hand grip strength was maintained in the Genotropin group, whereas a reduction in hand grip strength was observed for the placebo-treated group. A significant decrease in waist circumference and bone mineral density was observed within the Genotropin group after 6 months of treatment.

At the end of the subsequent 6-month open period (Open label), serum IGF-I levels were significantly increased within the former placebo group. In the original Genotropin group, body fat was significantly decreased and the lean/fat ratio was significantly increased during this 6-month open-treatment study period (months 7 to 12).

4. Safety

4.1 CLINICAL SAFETY VARIABLES

Physical examination

There was no change in body weight between the Genotropin group and the placebo-treated patients after the double-blind phase, nor within either treatment groups during the following 6-month open phase, or when measured over the entire 12-month study period.

Pulse, systolic and diastolic blood pressure at rest did not change for the Genotropin group when compared to placebo group during the double-blind phase, nor within either treatment group during the following 6-month open phase, or when measured over the entire 12-month study period.

4.1.1 LABORATORY SAFETY VARIABLES

Mean values for the respective changes in blood glucose, fructosamine, serum insulin and C-peptide during the period shown are presented in Table 3.

BEST POSSIBLE COPY

Table 3. Change in blood glucose, fructosamine, insulin and C-peptide during treatment

	Baseline		months 0-6 double-blind period			months 0-6 open period		months 6-12 open period(¤)		months 0-12 total period	
	Genotropin	placebo	Genotropin	placebo	p-value between	Genotropin	p-value within	former placebo	p-value within	Genotropin	p-value within
Blood glucose	4.9;0.4	4.9;0.7	+0.3	-0.2	**0.026**	+0.3	**0.008**	+0.2	ns	+0.1	ns
mmol/L											
Fructosamine	218.5;25.1	228.1;24.0	+16.2	+5.0	ns	+16.2	**0.027**	-6.8	ns	+12.1	0.098
µmol/L											
Insulin	11.7;6.5	17.0;16.2	+2.7	+9.8	ns	+2.7	ns	-0.43	ns	+1.0	ns
mU/L											
C-peptide	0.48;0.20	0.51;0.24	+0.19	0.16	ns	+0.19	**0.020**	+0.06	ns	+0.06	ns
nmol/L											

(¤) during the 6-month open period (months 7-12) the former placebo group was receiving Genotropin therapy.

Laboratory assessments with values reported as abnormal and comments upon the clinical significance are shown below.

Glucose

All values recorded were within normal range. A statistically significant increase in blood glucose was noted for the Genotropin group (p=0.008) during the 6-month double-blind period. This change was, however, no significant when examined over the total 12-month trial period. The change in blood glucose for the Genotropin group was also significantly different compared to the placebo group after 6 months of

treatment (p=0.026). However, no significant increase in blood glucose was seen for the former placebo group during the subsequent 6-month open Genotropin treatment period.

Fructosamine

No statistically significant change in fructosamine was observed for the Genotropin group compared to the placebo group after 6 months of treatment. However, a significant increase in fructosamine was noted for the Genotropin group (p=0.027) during the 6-month double blind period, whereas no significant change was seen for the Genotropin group when examined over the entire 12-month trial period. The individual deviations from normal range are shown below. The deviations were judged by the investigator to be of no clinical significance.

	Pat. no.	Group	Baseline	Month 6	Month 12	Normal Range
Fructosamine, µmol/L	2	Genotropin	**181**	232	204	
	10	Genotropin	**193**	220	220	
	13	Genotropin	**184**	225	219	
	14	placebo	**199**	250	221¤	
	19	placebo	201	**177**	-	

¤ indicates a patient who received placebo treatment during the first 6 months of the study and Genotropin treatment thereafter

Insulin

No significant change in serum insulin was observed for the Genotropin group compared to the placebo group after 6 months of treatment. No significant changes were seen for either treatment group during any of the study periods.

C-peptide

No significant change in C-peptide was observed for the Genotropin group compared to the placebo group after 6 months of treatment. A significant increase in C-peptide was noted for the Genotropin group (p=0.020) during the 6-month double-blind period. However, the increase was not statistically significant over the entire 12-month trial period.

Hemoglobin

The individual deviations from normal range are were judged by the investigator to be of no clinical significance.

Leukocytes

Deviations from normal values were observed in two subjects on GH and four on placebo. All are considered of no clinical significance.

Creatinine

The individual deviations from normal range are shown below. The 12th month's value (*) in patient no. 15 was deemed clinically significant by the investigator. The other deviations were judged by the investigator to be of no clinical significance.

	Pat. no.	Group	Baseline	Month 6	Month 12	Normal Range
Creatinine, mmol/L	4	Genotropin	**0.13**	**0.13**	0.12	0.05-0.12
	15	Genotropin	0.11	0.11	**0.13***	

ASAT

The individual deviations from normal range are shown below. The deviations were judged by the investigator to be of no clinical significance.

	Pat. no.	Group	Baseline	Month 6	Month 12	Normal Range
ASAT, U/L	1	placebo	**56**	31	**48**¤	<45
	2	Genotropin	25	22	**47**	

¤ indicates a patient who received placebo treatment during the first 6 months of the study and Genotropin treatment thereafter

GGT

The individual deviations from normal range are shown below. The deviations were judged by the investigator to be of no clinical significance.

	Pat no.	Group	Baseline	Month 6	Month 12	Normal Range
GGT, U/L	2	Genotropin	28	25	**73**	<50 females
	8	placebo	**54**	**63**	46¤	<60 males
	16	placebo	32	**66**	36¤	

¤ indicates a patient who received placebo treatment during the first 6 months of the study and Genotropin treatment thereafter

4.3. ADVERSE EVENTS

A summary of the clinical adverse events by body system and number of patients with adverse events is shown below in Table 4. Events with onset during the double-blind period are listed separately from events originating during the open Genotropin period of the study.

A total of 63 clinical adverse events were reported during Genotropin treatment and 32 adverse events during placebo treatment in 18 out of 20 patients.

During the 6-month double-blind period, 23 adverse event were reported in 9 out of 10 patients in the Genotropin group. A relationship to Genotropin treatment was considered by the investigator as possible or probable and unlikely for 6 and 13 events, respectively. No judgment was received for 4 of the events.

Most frequently reported adverse events were respiratory tract infections, gastrointestinal system disorders and events related to fluid retention e.g., arthralgia and edema. These events led to a temporary dose reduction due to fluid retention in three patients.

Among the 32 adverse events reported during the placebo period for in 9 out of 10 patients, 5 of these events were considered possibly or probably related to treatment whereas the remaining 27 events were considered unlikely to be related to treatment. Most frequently reported adverse events were gastrointestinal system disorders, headache and psychiatric disorders. The events led to a temporary dose reduction and/or interruption due to mood change in one patient, injection site reaction in another patient and weight gain in the third patient.

During the subsequent 6-month study period (months 7 to 12), 27 adverse event were reported in 9 patients in the Genotropin group. A relationship to Genotropin was considered by the investigator as probable or possible and unlikely for 9 and 13 events, respectively. No judgment was received for 5 of the events.

Most frequently reported adverse events were respiratory tract infections, gastrointestinal system disorders and events related to fluid retention e.g., arthralgia, pain in the extremities and edema. Two of the events, fluid retention in one patient and pain in extremities in another patient led to a temporary dose reduction.

In the former placebo group, 13 adverse events were reported during the 6-month open study period (month 7 to 12) for 7 patients. Six of these events were considered possibly or probably related to treatment and 6 events were considered unlikely to be related to treatment. No judgment was received for one event. Most frequently reported events were events related to fluid retention. The events led to a dose reduction due to mood change in one patient and fluid retention in another patient. Treatment was discontinued in pat no. 19 because of relapsed Cushings disease.

APPEARS THIS WAY ON ORIGINAL

Table 4. Reported clinical adverse events during the 12-month study period

Body system Event description Disorder	No. of pats.	Freq. (% of pats.)	No. of events	Causal relation		Double-blind period 0-6 months		Open period 6-12 months	
				unlikely	possible/ probable	placebo	Genotropin	former placebo	Genotropin
Skin and appendages	3	15	3	3		2	1		
- Skin rash				1		1			
- Pruritus				1			1		
- Sunburn				1		1			
Musculo-skeletal system	8	40	8*	5	2	2	2	1	3
- Tendinitis				1					1
- Interphalangeal pain					1		1		
- Arthralgia				1	1		1		2
- Thumb pain				1		1			
- Fracture right fibula				1		1			
- Muscular pain				1				1	
Central & peripheral nervous system	8	40	15	11	4	7	1	5	2
- Tingling, hand, fingers				1	2		1		2
- Epilepsy				1		1			
- Headache				3		3		1	
- Headaches & dizziness, worse				1		1			
- Postural dizziness				1		1			
- Voice hoarseness				1				1	
- Vocal cord paresis				1				1	
- Hyperactivity					1			1	
- Dizziness				2		1		1	
- Cramps, legs					1	1			
Vision disorders	1	5	1	1					1
- Corneal ulcer				1					1
Special senses others, disorders	1	5	1	1			1		
- Altered taste				1			1		
Psychiatric disorders	4	20	5	5		4		1	
- Forgetfulness				1		1			
- Lethargy				1		1			
- Panic attack				1				1	
- Emotional lability				1		1			
- Aggression				1		1			
Gastro-Intestinal system	10	50	13	12	1	6	3	1	3
- Gastroenteritis				1		1			
- Diarrhea				1	1	1	1		
- Abdominal pain				3		2		1	
- Constipation				1		1			
- Gingivitis				1					1
- Dyspepsia				1					1
- Vomiting				2			1		1
- Nausea				2		1	1		
Endocrine disorders	6	30	7**	2	2	1	3		3
- ADH deficiency diagnosed				1		1			
- Gynecomastia					1		1		1
- Mastalgia				1	1		1		1
- Hypoadrenalism							1		
- Hypothyroidism									1
Cardiovascular disorders	1	5	1*					1	
- Hypertension								1	

* one event not judged by the investigator

** three events not judged by the investigator

continued on following page

BEST POSSIBLE COPY

Table 4. Continued

Body system Event description Disorder	No. of pats.	Freq. (% of pats.)	No. of events	Causal relation		Double-blind period 0-6 months		Open period 6-12 months	
				unlikely	possible/ probable	placebo	Genotropin	former placebo	Genotropin
Respiratory system	5	25	11***	9		1	4		6
- Upper resp. tract infection				4		1	3		
- Influenza				3					3
- Shortness of breath				1					1
- Scattered crackles, lung basis									1
- Scattered rhonchi									1
- Bronchitis				1			1		
Urinary system	1	5	1	1		1			
- Urinary hesitancy				1		1			
Reproductive, female	1	5	1	1		1			
- Vaginal bleeding				1		1			
Body as a whole - General	17	85	24***	7	15	4	7	4	9
- Edema					2	1	1		1
- Weight gain					2			1	
- Fatigue				1			1		
- Fluid retention					5		2	1	2
- Chest pain				3		2	1		
- Traumatic amputation distal phalanx				1				1	
- Worsening Carpal tunnel syndrome					1		1		
- Periorbital cellulitis									
- Pain in extremities				1					1
- Sore hands				1	4	1	1		4
- Relapse Cushing's disease									1
					1			1	
Application site	3	15	3	1	2	2	1		
- Superficial bruising at inj. site					2	1	1		
- Thigh hematoma				1		1			
Resistance mechanism	1	5	1	1		1			
- Ear infection				1		1			

*** two events not judged by the investigator

4.3.1 SERIOUS ADVERSE EVENTS

BEST POSSIBLE COPY

Four serious adverse events were reported during the study. Furthermore, two patients, nos. 11 and 19 were so labeled according to protocol because the patients were withdrawn from the trial by the investigator due to the adverse event.

Patient no. 5 had a worsening headache which resulted in hospitalization for 3 days between the 3rd and 6th month's visits. A causal relationship with Genotropin treatment was considered to be unlikely.

Patient no. 8 experienced vaginal bleeding between the 3rd and 6th month's visits requiring a dilatation and curettage (D/C). A causal relationship with Genotropin treatment was considered to be unlikely.

Patient no. 15 was hospitalized due to periorbital cellulitis after 10 months of treatment. A causal relationship with Genotropin treatment was considered to be unlikely.

Patient no. 16 experienced an infected thigh hematoma after 5 months of treatment which resulted in hospitalization. A causal relationship with Genotropin treatment was considered to be unlikely.

normal levels for all but one patient, pointing to the need for individualization of dose for optimal treatment with respect to normalization of serum IGF-I levels.

During treatment, beneficial effects were observed in body composition, namely, reduction in the amount of body fat. No favorable changes in either lean body mass or waist circunference were seen during the placebo controlled part of the study To elucidate a possible functional implication of these body composition changes, hand grip strength was measured in this study, and a difference could be noted between patients treated with Genotropin and those treated with placebo. Thus, the Genotropin treated patients maintained their strength, while a reduction was observed during placebo treatment.

Effects on bone mineralization were also determined. The primary effect of Genotropin treatment was a prompt decrease in bone density (within six months), and this decrease was still present after one year of treatment.

With the dosages used, (target dose 0.75 mg/kg/week), reported adverse events, particularly symptoms related to fluid retention, were common but decreased with time and/or dose reduction.

6.0 CONCLUSION

This 6-month study demonstrates that body fat is decreased in subjects with adult GHD treated with GH. No changes were observed either in lean body mass or in waist circumference between the GH treated and the placebo group. Decreases in bone mineral density were observed in the GH treated group while no effects on lipids were achieved. Circulating IGF-I levels increased in the GH treated group.

Treatment with Genotropin in patients suffering from pronounced growth hormone deficiency due to pituitary/peripituitary disorders, or their treatment, appears to be safe at the doses used and for up to 12 months; reported adverse events related to fluid retention were common but decreased with time and/or dose reduction.

Section Eight

Summary and Recommendations

Summary and recommendations

The data that compose this NDA are derived from six small similarly designed double blind studies. AGHD individuals were randomized and treated either with GH (n=85) or placebo (n=87) for six months.

Individuals with AGHD form a very heterogeneous group. Some with this disorder are young and were previously treated with GH during childhood and adolescence. Others are older and became GHD as a result of pituitary tumors and the sequelae of the surgical and/or radiation therapeutic approaches. Some having had Cushing's syndrome were overweight and others had weight excess due, in part, to hypothalamic disregulations. In contrast to GHD of childhood in which males are more common than females, AGHD tend to have an even sex distribution. In addition, when these studies were performed, tests such as clonidine were used for the diagnosis of AGHD. Now, there is clear consensus that the clonidine test is not adequate because it elicits less than maximal GH secretory responses in normal older adults. All these variables, in addition to the sample size, reduce the likelihood of consistent findings across these studies.

Despite all these variables, most of the studies have shown a statistically significant treatment effect of GH when given to GH deficient adults. Moreover, when the data of all studies are pooled, a clear statistical difference favoring GH is observed ($p<.00001$) with respect to increased LBM (see statistical review). Thus, the data support the sponsor's claim that GH is effective in inducing changes in body composition, particularly in decreasing fat mass and increasing LBM. This is accompanied, in most of the studies, of a statistically significant change in waist circumference. Because adult patients with GHD are prone to cardiovascular disease, these GH induced changes may be protective for these patients.

A statistical significant association between somatotropin treatment and elevations of IGF-I, arthralgia, stiffness and pain in extremities, edema, peripheral swelling and paresthesias was also found. All other adverse events did not differ between groups and are not believed to be the result of GH treatment.

It is worth noting that IGF-I levels at the dose recommended in the label seem to be elevated in excess of 2 SD above the mean in approximately 20% or more of the patients. This sensitivity to GH therapy appears to be affected by age (older patients more prone than younger), obesity (heavier patients more affected), and sex (females less susceptible than males). Recent recommendations of the
suggest that treatment with GH for AGHD should take into consideration these variables when adjusting GH doses. These recommendations will be included in the label, in order to avoid overdosing patients.

Additionally, in most of the studies bone density was negatively affected by GH treatment at the six month mark. This trend tend to reverse in the open label studies

(12-24 more months) and information in the literature suggests that initially GH has this negative effect on bone remodeling but with time bone accretion occurs. Thus, this finding should be listed in the label.

The number of AGHD is limited and we therefore expect that a small group of sub-specialists will be prescribing GH. Hence, as with currently happens with insulin therapy individualization will be needed. The current label addresses this issue properly and we will request the manufacturer to focus on this specific point in the promotional material.

Pharmacia Upjohn has gained insights and experience with subjects with AGHD in the last seven years, and at the present time they are following more than 1500 patients with this condition worldwide. Some of these patients have been followed for more than five years. Information provided to the Agency indicates that most of the listed adverse reactions occur early after starting GH therapy, they improve or disappear with time and/or with dose reductions, and that no untoward reactions have yet occurred that could be directly linked to GH.

Glucose intolerance and diabetes, conditions more commonly seen in middle age individuals, were reported in AGHD subjects treated with GH. It seems that these subjects were heavier than the norm and most of them had evidence of glucose intolerance or insulin resistance before GH was started. It is still unknown whether the benefit of treatment with GH on this sub-population outweighs the risks of glucose intolerance, diabetes, and the potential complication that may occur. This should has been properly addressed in the label.

The small sample size of the studies reviewed and their short exposure (more patients no more than one year) limit our ability to assess long term safety in a group of patients that will be treated for years. This is particularly relevant in most of AGHD patients that become GH deficient due to a pituitary tumor. Little is known of the natural history of these tumors and less on whether GH may have any growth promoting effects that will lead to further complications requiring surgery, radiation or additional medications. The close monitoring that these subjects receive, given their previous medical history, makes physicians more alert to the potential recurrence of primary tumors.

Moreover, the long term effects of GH on other tissues such a the breast and the prostate remain unknown. Whether normalization of GH in adults that tend to decrease endogenous GH secreation with age will pose an unexpected danger remains unknown.

The information presented in this document clearly indicates that GH has a positive effect on body composition and that it tends to normalize it. Adverse reactions tend to be dose related and decrease or disappear with time. The benefit risk ratio analysis suggest that the benefit of GH treatment of GHDA outweighs the currently known risks.

Based upon the information reviewed and the recommendations of all other reviewers, I recommend the approval of this NDA if all the pending labeling issues are satisfactorily resolved.

/S/

Saul Malozowski, M.D., Ph.D.

September 22, 1997

APPEARS THIS WAY
ON ORIGINAL

CENTER FOR DRUG EVALUATION AND RESEARCH

APPLICATION NUMBER: 020280/S008

CHEMISTRY REVIEW(S)

BEST POSSIBLE COPY

CHEMISTS REVIEW	1. ORGANIZATION	2. NDA NUMBER JUN 30 1997
	DMEDP II, HFD-510	20-280
3. NAME AND ADDRESS OF APPLICANT		4. SUPPLEMENT NUMBER, DATE
Pharmacia & Upjohn 700 Portage Rd. Kalamazoo, MI 49001-0199		SEI-008 ~~1-11-97~~ 11-1-96
5. PROPRIETARY NAME	6. NAME OF THE DRUG	7. AMENDMENTS, REPORT, DATE
Genotropin	somatropin (rDNA) for injection	
8. SUPPLEMENT PROVIDES FOR		
A new indication for the drug for "long-term replacement threapy in adults with growth-hormone deficiency."		
9. PHARMACOLOGICAL CATEGORY	10. HOW DISPENSED	11. RELATED IND, NDA, DMF
growth hormone	RX	
12. DOSAGE FORM	13. POTENCY	
small volume parenteral	1.3, 5.0, and 12, mg/mL (equivalent to 4, 15, and 36 IU/mL)	
14. CHEMICAL NAME AND STRUCTURE		
See Chemistry Review #1		

15. COMMENTS

This supplemental application seeks approval for a new indication for Gentcropin to be used to treat adult growth-hormone deficiency. The sponsor has, in addition to the clinical results, provided updated labeling to include the new indication, clinical pharmacology, reviews of the clinical results, a dose and administration section for adult users, and changes to conform to the "pediatric patients" rules. The annotated labeling provided with the application is acceptable. Additionally, the sponsor has provided an abreviated EA to support the application. The EA has been reviewed and found to be adequate

16. CONCLUSION AND RECOMMENDATION

The sponsor has provided appropriate labeling to support the proposed indication. No CMC changes were instituted. Updated EA information was provided and is accpetable. The application is approvable from a chemistry standpoint.

17. NAME	18. REVIEWERS SIGNATURE	19. DATE COMPLETED
WILLIAM K. BERLIN	/S/	6-17-97

DISTRIBUTION: ORIGINAL JACKET CSO REVIEWER DIVISION FILE

/S/
6/30/97

CENTER FOR DRUG EVALUATION AND RESEARCH

APPLICATION NUMBER: 020280/S008

PHARMACOLOGY REVIEW(S)

JUN 18 1997

18 Jun 97

NDA 20-280

Pharmacia and Upjohn Company
7000 Portage Road
Kalamazoo, MI 49001

Submission: dtd. 1 Nov 96

REVIEW AND EVALUATION OF PHARMACOLOGY AND TOXICOLOGY DATA
Supplemental Application (S-008) - Rec'd 4 Nov 96

Genotropin (somatropin [rDNA origin] for injection)

Recombinant (from E.coli) Human Growth Hormone

Indicated Use: [New Indication] Genotropin is indicated for long-term replacement therapy in adults with GHD of either childhood- or adult-onset etiology. GHD should be confirmed by an appropriate growth hormone stimulation test.

Manufacturer: Pharmacia AB, Sweden

Dosage: Adult GHD Patients. The recommended dosage at the start of therapy is not more than 0.04 mg/kg/week. The dose may be increased according to individual patient requirements to a maximum of 0.08 mg/kg/week, depending upon patient tolerance of treatment. It may be necessary to decrease the dose for patients who are older or obese.

Comments and Conclusion:

This Supplemental NDA consists primarily of new clinical information in support of the use of Genotropin for long-term replacement therapy in growth hormone deficient (GHD) adults of either childhood or adult-onset etiology with GH deficiency demonstrated in an appropriate GH stimulation test. Genotropin, recombinant human growth hormone (rhGH), is currently marketed for the long-term treatment of children who have growth failure due to an inadequate secretion of endogenous growth hormone (GH - NDA 20-280).

This submission contains no preclinical data but is referenced to the original NDA 20-280 for non-clinical pharmacology, toxicology, ADME-drug metabolism. No further preclinical studies are deemed necessary.

The Pharmacology portion of the Precautions section of the labeling is virtually the same as that of the currently marketed product.

/S/

David H. Hertig
Pharmacologist

NAI for pharmacology
/S/
6/18/97

cc: Original NDA 20-280,
HFD-345; HFD-510 NDA 20-280
HFD-510 RSteigerwalt, DHertig, MJohnston

CENTER FOR DRUG EVALUATION AND RESEARCH

APPLICATION NUMBER: 020280/S008

STATISTICAL REVIEW(S)

STATISTICAL REVIEW AND EVALUATION

JUL 28 1997

NDA#: 20-280/SE1-008

APPLICANT: Pharmacia and UpJohn Company

NAME OF DRUG: Genotropin (somatropin [r DNA origin] for injection)

INDICATION: Long term replacement therapy in growth hormone deficient (GHD) adults.

DOCUMENTS REVIEWED: Volumes 20.1, 20.133-20.150, 20.215 of NDA 20-280/SE1-008, dated November 1, 1996

MEDICAL REVIEWER: This review has been discussed with the clinical reviewer, Saul N. Malozowski, M.D., HFD-510

RELEVANT ISSUES DISCUSSED IN THIS REVIEW

1. The sponsor's six double-blind, randomized , placebo-controlled studies taken together have established a statistical association between somatropin and the primary efficacy parameter (increase in lean body mass).

2. Statistical associations have also been established between somatropin and the incidence of arthralgia, stiffness of extremities, edema, pain in the extremities peripheral swelling, and paraesthesia.

3. The effect if any of somatropin on Quality of Life has not been established by these six studies.

KEY WORDS: arthralgia, body composition, bioelectrical impedance, dual x-ray absorptiometry, edema, extremities, growth hormone deficiency, lean body mass, paraesthesia, quality of life, stiffness, swelling, Wilcoxon

BACKGROUND

The sponsor has submitted six single-center, double-blind, randomized, placebo-controlled studies to support the use of Genotropin for long term replacement therapy in adults with growth hormone deficiency.

These studies had a similar design in that a six-month double-blind, placebo-controlled treatment period was followed by at least a six-month open-label treatment period in which all patients received Genotropin.

In each study, a starting dose of .125 IU/kg/week for four weeks was used, after which the dose was increased to .25 IU/kg/week subject to a maximum daily dose of 4 IU.

The primary objective of each study was to evaluate effects on body composition (lean body mass versus fat). Secondary objectives were to evaluate the change in Quality of Life and to study the safety of Genotropin.

The primary efficacy variable in each study was the intra-individual ratio (after/before) of lean body mass. The Wilcoxon Rank Sum Test was used to perform between-treatment comparisons due to the resulting distribution of the data.

Each study was a part of an international multiple independent trial (MIT) program. Data for each study was to be pooled for the evaluation of Quality of Life and safety.

At this point in time the results of a Quality of Life evaluation have not been provided by the sponsor.

Consequently, this review will focus on the primary efficacy variable (lean body mass) results as well as on the pooled safety (adverse experience) results.

The sponsor noted that many procedures have been developed over the years for the determination of body composition. Four procedures were used in the six primary clinical trails. The procedures used for each study are displayed in Table 1. These procedures are described in Volume 20.215 (pages 174-176) of the sponsor's submission.

A review of each of the above mentioned six studies follows.

STUDY TRN 91-081-01 (Sweden)

A total of 25 patients were enrolled and randomized (12 somatropin, 13 placebo) to receive six months of double-blind therapy.

Each randomized patient completed the six-month double-blind treatment phase of the study.

A total of 20 patients (11 somatropin, 9 placebo) experienced at least one adverse event during the six month double-blind treatment phase. In examining the adverse event data submitted by the sponsor, this reviewer noted that significantly more somatropin patients experienced peripheral swelling (6 somatropin, 0 placebo, p=.01) than did placebo patients. A statistical trend (p=.08) was also detected with regard to hypoaesthesia which was experienced by 4 somatropin patients but by no placebo patient.

As indicated in Table 1, body composition was determined by the BIA and four-compartment procedures. In each case, the sponsor did not detect a significant between-treatment difference with respect to the primary efficacy variable (BIA: p=11, four-compartment: p=.18).

The results of this reviewer's lean body mass BIA analyses which are in agreement with those of the sponsor are displayed in Table 2. In examining Table 2, one notes the lack of a statistically significant (p=.11) difference as somatropin patients experienced a median percent lean body mass increase of 1.4% compared to a corresponding placebo decrease of 1.3%.

Consequently, this study cannot stand alone in supporting a somatropin treatment effect with regard to the primary efficacy variable.

STUDY TRN 91-001 (Sweden)

A total of 20 patients were enrolled and randomized (10 somatropin, 10 placebo) to receive six months of double-blind therapy.

Each randomized patient completed the six-month double-blind treatment phase of the study.

In examining the adverse event data submitted by the sponsor, this reviewer noted that only somatropin patients (8, p<.001) experienced adverse events during the six-month double-blind treatment phase. Significantly more somatropin patients experienced arthralgia (7 somatropin, 0 placebo, p<.01) than did placebo patients.

As indicated in Table 1, body composition was determined by the BIA and DEXA procedures. In each case, the sponsor detected a significant between-treatment difference in favor of somatropin over placebo with respect to the primary efficacy variable (BIA: p=.04, DEXA: p<.01).

The results of this reviewers' lean body mass BIA analyses which are in agreement with those of the sponsor are displayed in Table 3. In examining Table 3, one notes that the somatropin patients significantly (p=.04) outperformed their placebo counterparts with regard to the primary efficacy variable as the median percent increases were 6.4% and 2.4% for the somatropin and placebo groups respectively.

STUDY TRN 91-081-02 (Sweden)

A total of 23 patients were enrolled and randomized (12 somatropin, 11 placebo) to receive six months of double-blind therapy. Two of these patients (both on somatropin) failed to complete the six-month double-blind treatment phase of the study. One patient was withdrawn by the investigator after 85 days due to the development of diabetes mellitus. The other patient decided to withdraw after 36 days due to edema and muscle-skeletal pain.

Eleven patients (10 somatropin, 1 placebo, p=.001) experienced at least one adverse event during the six-month double-blind treatment phase. In examining the adverse event data submitted by the sponsor, this reviewer noted that significantly more somatropin patients experienced edema or edema generalized (5 somatropin, 0 placebo, p=.047) than did placebo patients.

As indicated in Table 1, body composition was determined by four different procedures.

The sponsor's primary efficacy variable analyses yielded significant between-treatment differences in favor of somatropin over placebo with regard to the DEXA (p=.01), two-compartment potassium (p=.045), and four-compartment (p=.031) procedures. However statistical significance was not detected (p=.11) with regard to the BIA procedure. In each case, the sponsor excluded the 2 somatropin patients who withdrew prior to completing the six-month double-blind treatment phase.

The results of this reviewer's lean body mass BIA completers analyses which are in agreement with those of the sponsor are displayed in Table 4.

Table 4 also displays the results of this reviewer's all patient analyses which includes the 3 month BIA (last observation carried forward) measurements for the 2 somatropin patients who did not complete the six-month double-blind treatment phase. In this case there was no significant (p=.28) between-treatment difference with regard to the primary efficacy parameter. Last observation carry forward analyses could not be performed for the other 3 body composition measurement procedures as those measurements were only performed at baseline and at the six-month time point.

The clinical relevance of these findings in which three of the four body composition procedures support the lean body mass efficacy of somatropin should be assessed by the reviewing clinicians.

STUDY TRN 91-131-04 (U.K.)

A total of 32 patients were enrolled and randomized (14 somatropin, 18 placebo) to receive six months of double-blind therapy.

Three patients (2 somatropin, 1 placebo) failed to complete the six-month double-blind treatment phase of the study. One somatropin patient withdrew after 109 days due to peripheral edema, arthralgia, and headaches. The other somatropin patient withdrew after 78 days due to swelling

fingers and feet, and discomfort in both the knees and joints of hand. The placebo patient withdrew after 8 days due to extreme distress.

A total of 26 patients (11 somatropin, 15 placebo) experienced at least one adverse event during the six-month double-blind treatment phase. In examining the adverse event data submitted by the sponsor, this reviewer detected statistical trends (p=.06) with regard to the arthralgia as well as the paraesthesia incidence rate (4 somatropin, 0 placebo).

As indicated in Table 1, body composition was determined by the DEXA procedure.

The results of this reviewer's lean body mass DEXA analyses which are in agreement with those of the sponsor are displayed in Table 5. In examining Table 5, one notes that the somatropin patients significantly (p=.025) outperformed their placebo counterparts with regard to the primary efficacy variable. The somatropin group experienced a median percent increase of 3.9% in lean body mass compared to a .2% decrease in the placebo group.

STUDY TRN 91-131-08 (U.K.)

A total of 52 patients were enrolled and randomized (27 somatropin, 25 placebo) to receive six months of double-blind therapy.

Three somatropin patients failed to complete the six-month double-blind treatment phase of the study due to generalized muscle aches and pains, non-compliance, and carpal tunnel syndrome respectively.

A total of 37 patients (22 somatropin, 15 placebo, p=.09) experienced at least one adverse event during the six-month double-blind treatment phase.

In examining the adverse event data submitted by the sponsor, this reviewer noted that significantly (p=.03) more somatropin patients experienced pain in the extremities than did placebo patients (8 versus 1) during the six-month double-blind treatment phase.

As indicated in Table 1, body composition was determined by the DEXA procedure.

The results of this reviewer's lean body mass DEXA analyses which are in agreement with those of the sponsor are displayed in Table 6. In examining Table 6, one notes that the somatropin patients significantly (p=.01) outperformed their placebo counterparts with regard to the primary efficacy variable. The somatropin group experienced a median percent increase of 4.5% in lean body mass compared to a .4% decrease in the placebo group.

STUDY CTN 92-8124-011 (New Zealand)

A total of 20 patients were enrolled and randomized (10 somatropin, 10 placebo) to receive six months of double-blind therapy.

One placebo patient who felt uncomfortable with daily injections withdrew after 21 days of double-blind treatment. The remaining 19 patients completed the six-month double-blind treatment phase.

Sixteen (7 somatropin, 9 placebo) patients experienced at least one adverse event during the six-month double-blind treatment phase. In examining the adverse event data submitted by the sponsor, this reviewer noted a statistical trend (p=.09) in favor of placebo over somatropin with regard to the incidence of edema which was experienced by four somatropin patients (but not by any placebo patient) during the six-month double-blind treatment phase.

As indicated in Table 1, body composition was determined by the DEXA procedure.

The results of this reviewer's lean body mass DEXA analyses which are in agreement with those of the sponsor are displayed in Table 7. In examining Table 7, one notes the lack of a statistically significant (p=.49) difference as somatropin patients experienced a median percent lean body mass increase of 1.2% compared to a corresponding placebo decrease of 1.2%.

REVIEWER'S CONCLUDING COMMENTS

A total of 172 (85 somatropin, 87 placebo) patients were enrolled and randomized into the six double-blind, randomized, placebo-controlled studies which were discussed above.

Table 8 displays, the results of a pooled adverse event analyses which was conducted by this reviewer. Adverse events for which at least a statistical trend (p<.10) was detected between treatment groups are displayed. In examining this table, one notes a statistical association between somatropin and several adverse events. The clinical relevance of these associations, should be assessed by the reviewing clinicians.

Table 9 displays a summary of this reviewer's lean body mass analyses. BIA results are displayed for Studies TRN 91-001, TRN 91-081-01, and TRN 91-081-02 as this procedure was utilized in each of these studies. DEXA results are displayed for Studies 91-131-04, TRN 91-131-08, and CTN 92-8124-011 as this was the only procedure utilized in these studies.

In examining Table 9, one notes that statistical significance was achieved in favor of somatropin over placebo in Studies TRN 91-001 (p=.04), TRN 91-131-04 (p=.025) and TRN 91-131-08 (p=.01). Somatropin patients outperformed (but not significantly) their placebo counterparts in Studies TRN 91-081-01 (p=.11), TRN 91-081-02 (p=.11), and CTN 92-8124-011 (p=.49). However, the sponsor did detect significant differences in favor of somatropin over placebo in Study TRN 91-08-02 with

respect to the DEXA (p=.01), two-compartment potassium (p=.045) and four-compartment (p=.031) procedures.

In combining (Blocked Wilcoxon) the results for these studies, this reviewer detected a highly statistically significant difference in favor of somatropin over placebo with respect to the primary lean body mass efficacy parameter. Somatropin patients experienced a median percent increase of 3.2% compared to a .1% decrease by the placebo patients. These results are also displayed in Table 9.

REVIEWER'S OVERALL CONCLUSION

The six single-center, double-blind, randomized, placebo-controlled studies submitted by the sponsor, taken together have established a statistical association between somatropin and an increase in lean body mass in adults with growth hormone deficiency.

However data has not been submitted to support the sponsor's labeling statement that "treatment with Genotropin was also associated with positive effects on aspects of quality of life (energy, vitality, social isolation), as assessed by the Nottingham Health Profile questionnaire and the Physiological General Well-Being Index". The sponsor has been requested to submit Scientific Report 93 96 414 "Influence on Quality of Life of Somatropin (Genotropin) replacement therapy in growth hormone deficient adult patients, A Summary Report" in order that we may assess their above mentioned labeling statement.

In addition, the six studies have also established a statistical association between somatropin and the incidence of arthralgia, stiffness of extremities, edema, pain in the extremities, peripheral swelling, and paraesthesia.

/S/

APPEARS THIS WAY
ON ORIGINAL

Daniel N. Marticello
Mathematical Statistician

Concur: Dr. Nevius /S/ 7/28/97

Archival: NDA 20-280/SE1-008
HFD-510
HFD-510/SSobel,GTroendle,AFleming,SMalozowski,MJohnston
HFD-715/Division File,DMarticello,Chron

This review consists of 8 pages of text and 9 pages of tables

APPEARS THIS WAY
ON ORIGINAL

TABLE 1

Body Composition Measurements+

Study	DEXA	BIA	Four	Two
TRN 91-001	X	X		
TRN 91-081-01		X	X	
TRN 91-081-02	X	X	X	X
TRN 91-131-04	X			
TRN 91-131-08	X			
CTN 92-8124-011	X			

+ DEXA: Dual x-ray absorptiometry

BIA: Two-compartment model with bioelectrical impedance analysis

Four: Four compartment model

Two: Two-compartment potassium model

APPEARS THIS WAY
ON ORIGINAL

TABLE 2

Study TRN 91-081-01

Lean Body Mass (kg)
BIA

	N	Baseline Median	Six Month Median	Median Intra-Individual Ratio
Placebo	13	63.6	64.5	.987
Somatropin	12	53.6	57.4	1.014
		p=.26		**p=.11**

APPEARS THIS WAY
ON ORIGINAL

TABLE 3

Study TRN 91-001

Lean Body Mass (kg)
BIA

	N	Baseline Median	Six Month Median	Median Intra-Individual Ratio
Placebo	10	56.5	53.1	1.024
Somatropin	10	49.8	51.3	1.064
		p=.73		**p=.04**

APPEARS THIS WAY
ON ORIGINAL

TABLE 4

Study TRN 91-081-02

Lean Body Mass (kg)
BIA

Completers

	N	Baseline Median	Six Month Median	Median Intra-Individual Ratio
Placebo	11	51.5	51.5	.992
Somatropin	10	54.5	58.7	1.031
		p=.97		**p=.11**

All Patients (LOCF)

	N	Baseline Median	Six Month Median	Median Intra-Individual Ratio
Placebo	11	51.5	51.5	.992
Somatropin	12	54.5	58.7	1.011
		p=.93		**p=.28**

TABLE 5

Study TRN 91-131-04

Lean Body Mass (kg)
DEXA

	N	Baseline Median	Six Month Median	Median Intra-Individual Ratio
Placebo	17	44.7	43.5	.998
Somatropin	12	44.0	45.4	1.039
		p=.67		**p=.025**

APPEARS THIS WAY
ON ORIGINAL

TABLE 6

Study TRN 91-131-08

Lean Body Mass (kg)
DEXA

	N	Baseline Median	Six Month Median	Median Intra-Individual Ratio
Placebo	16	43.2	42.1	.996
Somatropin	17	57.5	59.0	1.045
		p=.18		**p=.01**

APPEARS THIS WAY
ON ORIGINAL

TABLE 7

Study CTN 92-8124-011

Lean Body Mass (kg)
DEXA

	N	Baseline Median	Six Month Median	Median Intra-Individual Ratio
Placebo	9	47.8	47.8	.988
Somatropin	10	47.6	47.9	1.012
		p=.84		**p=.49**

APPEARS THIS WAY
ON ORIGINAL

TABLE 8

Adverse Events+

Event	Somatropin (N=85)	Placebo (N=87)
Arthralgia	22 (25.9%)***	4 (4.6%)
Stiffness of Extremities	13 (15.3%)**	0
Edema	12++ (14.1%)**	0
Pain, extremities	16 (18.8%)*	4 (4.6%)
Swelling, peripheral	18 (21.2%)*	6 (6.9%)
Paraesthesia	11 (12.9%)*	2 (2.3%)
Fatigue	7 (8.2%)#	1 (1.1%)

\+ **Number of patients that experienced adverse events during the six-month double-blind treatment phase.**

++ **Edema peripheral (6), edema generalized (3), edema (3).**

p=.06

* **p<.01**

** **p<.001**

*** **p<.0001**

APPEARS THIS WAY
ON ORIGINAL

TABLE 9

Lean Body Mass

Six Study Summary

Study		Median Intra-individual Ratio		P-Value
		Placebo	Somatropin	
TRN 91-001	(BIA)	1.024	1.064	.04
TRN 91-081-01	(BIA)	.987	1.014	.11
TRN 91-081-02	(BIA)	.992	1.031	.11
TRN 91-131-04	(DEXA)	.998	1.039	.025
TRN 91-131-08	(DEXA)	.996	1.045	.01
CTN 92-8124-011	(DEXA)	.988	1.012	.49
Pooled		**.999**	**1.032**	**<.00001**

APPEARS THIS WAY
ON ORIGINAL

CENTER FOR DRUG EVALUATION AND RESEARCH

APPLICATION NUMBER: 020280/S008

ADMINISTRATIVE DOCUMENTS

NEW DRUG APPLICATION

GENOTROPIN®

Patent information

Rights to proprietory expression systems for human growth hormone are acquired by Kabi Pharmacia AB through an agreement with Genentech, Inc..

Kabi Pharmacia has no patents claiming authentic human growth hormone Genotropin® or a method of using it for treatment of patients with growth hormone deficiency (GHD).

The Applicant Kabi Pharmacia, Inc. (The US subsidiary of the Swedish company) is submitting herewith a copy of the following US Patent:

US Patent 4,968,299
Date of Patent: November 6, 1990
METHOD AND DEVICE FOR INJECTION

The patent originally assigned to KabiVitrum AB is now, following a merger with the Pharmaceutical Division of Pharmacia AB, the property of Kabi Pharmacia AB.

90 -12- 0 7 BLFR

United States Patent [19]

Ahlstrand et al.

[11] Patent Number: 4,968,299

[45] Date of Patent: Nov. 6, 1990

[54] METHOD AND DEVICE FOR INJECTION

[75] Inventors: Bo Ahlstrand, Djursholm; Ebba Florin-Robertsson, Stockholm; Linda Fryklund, Sollentuna; Birger Hjertman, Vällingby; Anders Ström, Saltsjö-Boo, all of Sweden

[73] Assignee: KabiVitrum AB, Stockholm, Sweden

[21] Appl. No.: 212,647

[22] Filed: Jun. 28, 1988

[30] Foreign Application Priority Data

Jul. 2, 1987 [SE] Sweden 8702735
Apr. 15, 1988 [SE] Sweden 8801405

[51] Int. Cl.[5] A61M 37/00

[52] U.S. Cl. 604/90; 604/56; 604/224; 604/232; 604/191

[58] Field of Search 604/82, 89, 90, 91, 604/56, 224, 232, 234, 191, 416, 211, 208; 222/136, 145

[56] References Cited

U.S. PATENT DOCUMENTS

1,709,691	4/1929	Steuer .	
1,750,272	3/1930	Kirk	604/224
1,943,120	1/1934	Kabnick	604/90
2,345,302	3/1944	Smith	604/224
2,549,417	4/1951	Brown .	
2,607,344	8/1952	Brown .	
2,646,798	7/1953	Brown	604/234
2,665,690	1/1954	Lockhart	604/416
2,717,601	9/1955	Brown .	
3,343,539	9/1967	Moorhouse	604/224
3,467,097	9/1969	Ogle	604/416
3,811,441	5/1974	Sarnoff	604/232
4,226,236	10/1980	Genese .	
4,592,745	6/1986	Rex et al.	604/224
4,599,082	7/1986	Grimard	604/90
4,613,326	9/1986	Szware .	
4,648,532	3/1987	Green	222/136

FOREIGN PATENT DOCUMENTS

0278032	5/1964	Australia	604/56
0207544	7/1987	European Pat. Off. .	

Primary Examiner—C. Fred Rosenbaum
Assistant Examiner—Denise W. DeFranco
Attorney, Agent, or Firm—Pollock, Vande Sande & Priddy

[57] ABSTRACT

A dual-chamber cylinder ampoule is used for the mixture of a sensitive, solid medicament, with liquid which is caused to flow calmly through the medicament in order to avoid any shaking and mechanical influence. The mixing is preferably carried out at a pressure above atmospheric.

An injection device for the preparation of an injection solution and a following injection of such solution includes first and second tubular members for enclosing and holding a dual-chamber cylinder ampoule, in which the dry medicament is kept separated from the liquid. When the two tubular members are being screwed together the liquid is calmly and gently mixed with the dry medicament and dissolves it, and the resulted solution can thereafter be injected by means of the dosage and administration mechanism, provided in one tubular member, through a needle arranged at the front end of the other tubular member.

11 Claims, 5 Drawing Sheets

APPEARS THIS WAY ON ORIGINAL

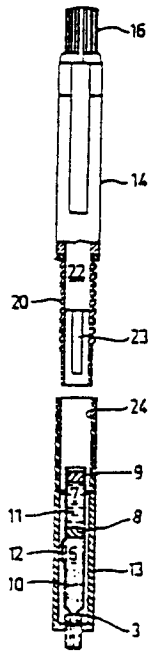

APPEARS THIS WAY ON ORIGINAL

130002

FIG.1

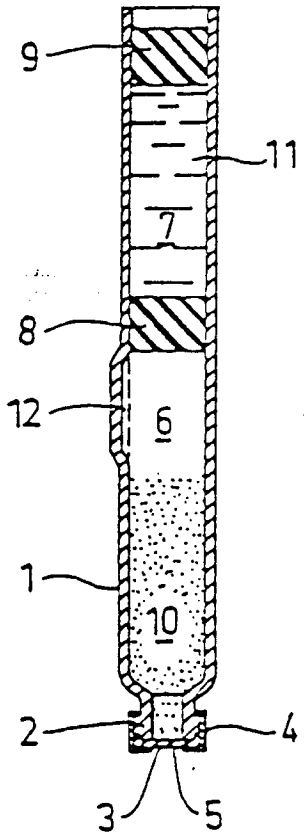

FIG.4

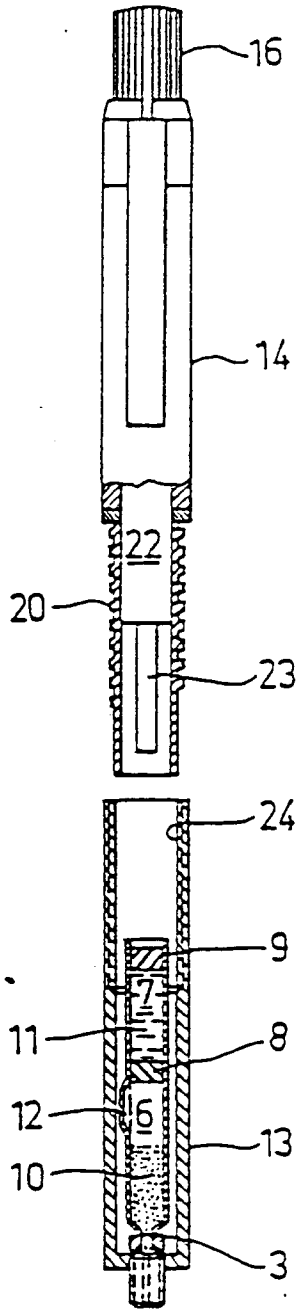

APPEARS THIS WAY ON ORIGINAL

FIG.2

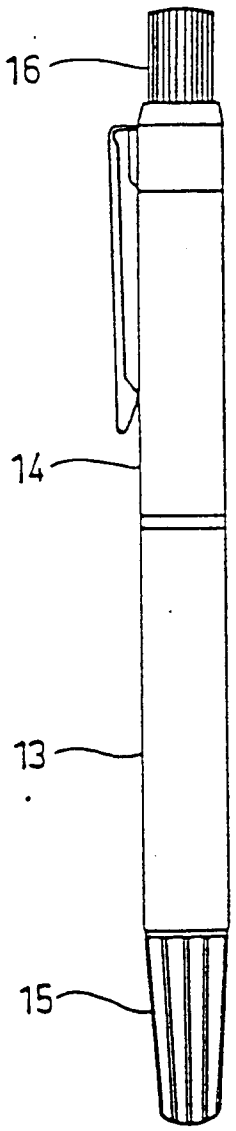

FIG.3

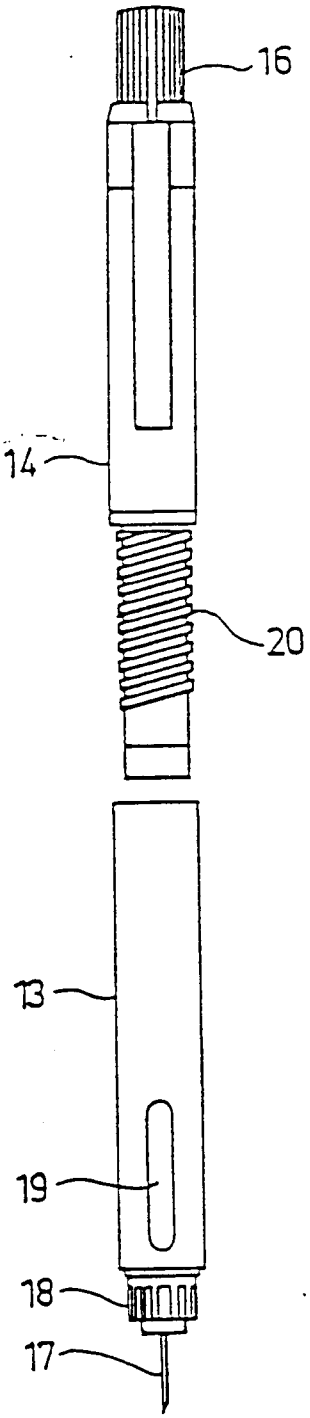

APPEARS THIS WAY ON ORIGINAL

APPEARS THIS WAY ON ORIGINAL

FIG.5

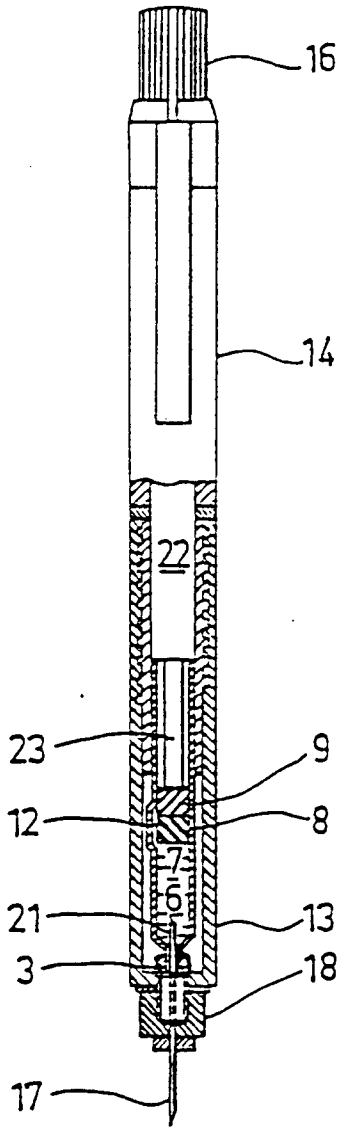

APPEARS THIS WAY ON ORIGINAL

APPEARS THIS WAY ON ORIGINAL

APPEARS THIS WAY ON ORIGINAL

FIG. 6

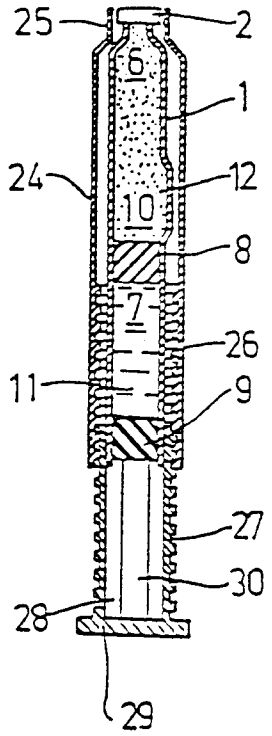

FIG. 7

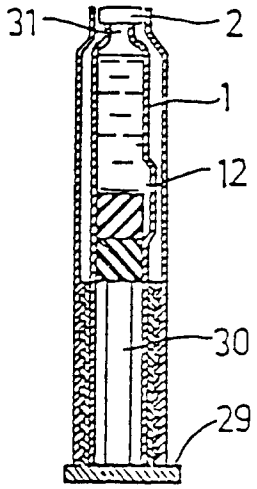

FIG. 8

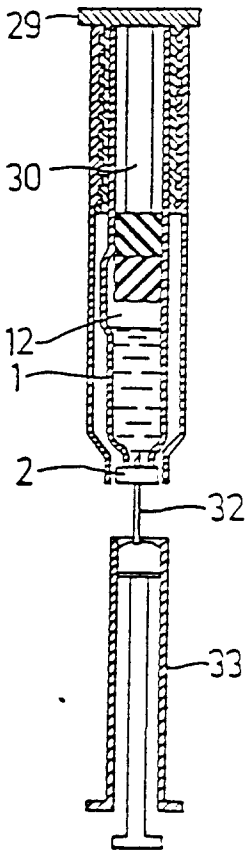

APPEARS THIS WAY
ON ORIGINAL

FIG.9

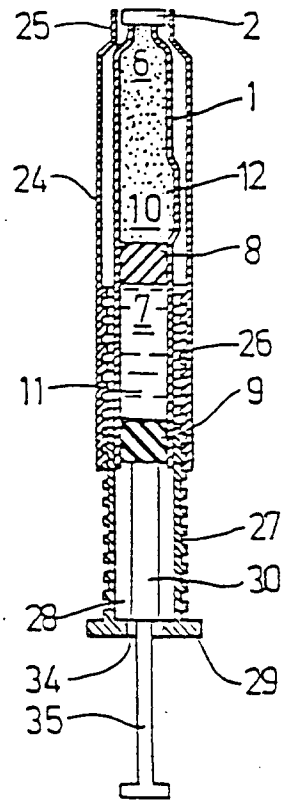

FIG.10

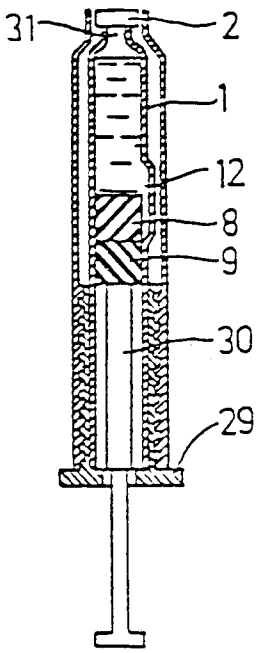

FIG.11

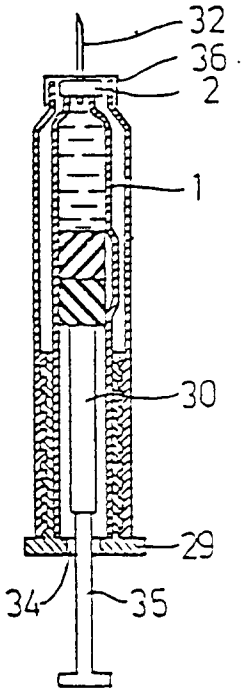

APPEARS THIS WAY ON ORIGINAL

APPEARS THIS WAY ON ORIGINAL

METHOD AND DEVICE FOR INJECTION

BACKGROUND OF THE INVENTION

This invention relates to a method and a device for injection, especially for use in ambulatory treatment. More specifically, the invention relates to a method and a device by means of which an injection solution of a substance is prepared immediately before the injection, or in the preparation of several doses, before the first injection.

Injection devices for use in ambulatory treatment where the medicament is present in a solution are previously known and have been widely used in, for example, insulin treatment of diabetes. Such devices are usually built such that the patient himself can easily assemble a cylinder ampoule for one or more doses, and injection needle and a dosing device in a suitable holder and thereafter give himself easily the required injection. In the device it is also easy to exchange used ampoules and needles for new ones. In an assembled state, such injection devices are often shaped like a fountain-pen and can be easily brought along by the patient.

Moreover, so-called dual-chamber or mixing containers or cylinder ampoules are also known for preparation of solutions of sensitive substances immediately before the injection. Such containers are divided into two chambers separated by a movable wall or piston. The sensitive medicament is present in the front chamber in a dry, usually freeze-dried state and the front end of the front chamber is sealed by a wall penetrable to an injection needle. The liquid intended to dissolve the sensitive substance before the injection is present in the rear chamber. The two chambers are separated by a front movable wall and the rear end of the rear chamber is sealed by means of a rear movable wall. Furthermore, in the container wall there is arranged a connecting passage which can connect the front and the rear chambers.

In a storage position before the injection, there is no communication between the front and the rear chambers. The inlet as well as the outlet of the connecting passage end in the front chamber.

When the container is to be readied for injection, the rear, movable wall in the rear chamber is moved forwards, and due to the incompressibility of the liquid, the front movable wall will then also be moved forwards until it reaches a position just opposite the connecting passage in the wall of the container. When the rear movable wall thereafter is moved further forwards, the liquid will be pressed through the overflow passage into the front chamber where it will be brought into contact with the medicament and dissolved. At the injection the two walls will act together as a piston and press the prepared injection solution out through a needle introduced through the front end wall in the front chamber.

In certain cases the medicament can be so sensitive that special measures must be taken to protect the substance against mechanical influence at the time of dissolution as well as in the further handling of the solution. This applies for example to freeze-dried growth hormones where even a simple shaking of the substance and the liquid can lead to a non-acceptable biochemical change. The preparation of the container for injection must then be made with the utmost carefulness.

It would be very desirable to have available an injection device that is as easy to bring along and handle as those previously known for simple cylinder ampoules in

which the medicament is present in a liquid state as a solution, suspension or emulsion, at the same time as the advantages of mixing containers at injection of sensitive substances might be utilized. This object is now achieved by the present invention.

SUMMARY OF THE INVENTION

According to the invention there are provided a method and a device for preparation of an injection solution of one or more substances sensitive to degradation, and a subsequent injection of this solution.

It is intended by the method of the invention to prepare a solution, emulsion or suspension in water of one or more sensitive medicaments for one or more subsequent injections, using a multi-chamber cylinder ampoule known in the art which comprises a front space containing the sensitive medicament and is sealed at its front end by means of a membrane penetrable to an injection needle and delimited at its rear end by a front movable wall, a rear space containing an aqueous phase and which is delimited at its front end by the front movable wall and is delimited at its rear end by a rear movable wall, and a connecting passage arranged in the wall of the ampoule between the rear and the front space, the rear movable wall being moved forwards and entraining thereby the aqueous phase and the front, movable wall until this is just opposite the overflow passage so that the aqueous phase upon continued forward motion of the rear movable wall will flow past the front movable wall into the front space and dissolve, emulsify or suspend the medicament. What characterizes the method is that the aqueous phase is made to flow calmly from below and upwards through the medicament avoiding any shaking and admixture of air.

Moreover, the invention comprises a device for carrying out the present method. What characterizes the device is that it comprises

(a) a container for the constituents of the injection solution, in which the constituents are kept separated but can be brought together, by external action, to be mixed and dissolved, and which is made as a tube which is sealed at its front end by means of a penetrable membrane, which in a space between the penetrable wall and a front movable wall contains the solid constituents of the injection solution, in a space between the front movable wall and a rear movable wall contains the liquid constituents of the injection solution and wherein the tubular wall is provided with a connecting passage so arranged, that when the rear movable wall is moved forwards together with the liquid and the front movable wall, the liquid can flow past the front movable wall and be mixed with the solid constituents to a solution;

(b) holder means in which the container can be fixed such that the constituents of the injection solution are brought together and mixed and which is made of two tubular members which can be screwed together and enclose the container such that when the members are screwed together the front end of the container with the penetrable membrane is exposed at the front end of the holder means for penetration by an injection needle and the rear movable wall at the rear end of the container is moved forwards together with the liquid and the front movable wall such that the liquid is made to flow through the connecting passage over to the space of the solid constituents, to be mixed with these to a solution;

(c) holder means for an injection needle arranged to be applied to the front end of the holder means of the

BEST POSSIBLE COPY

container so that the needle can be connected with the interior of the container through the penetrable membrane; and

(d) a dosing device connected to the holder means of the container, through the operation of which the rear movable wall in the container is made to be displaced forwards in a controlled way administering determined doses of the injection solution, the dosage device being brought to a starting position for dosage when the holder means of the container are screwed together.

The invention also comprises a more universally useful device for preparation of an injection solution of constituents placed in a container according to point (a) above.

In the following, the invention is described in greater detail with reference to the accompanying drawing.

An embodiment of a device according to the invention is shown in the drawing, wherein:

BRIEF DESCRIPTION OF THE DRAWINGS

FIG. 1 shows a dual-chambered cylinder ampoule having two chambers for use in an injection device;

FIG. 2 is a general view of an injection device according to the invention;

FIG. 3 shows the same device in its disassembled state;

FIG. 4 is a sectional view of the device in its disassembled state;

FIG. 5 shows the device ready for injection;

FIG. 6 is a schematic view of a first embodiment of the device according to the invention in a position before the preparation of the injection solution;

FIG. 7 is a schematic view of the device in FIG. 6 after the preparation of the injection solution;

FIG. 8 is a schematic view of the device shown in FIGS. 6 and 7 when taking out the prepared solution into a hypodermic syringe;

FIG. 9 is a schematic view of a second embodied variant of the device according to the invention in a position before the preparation of the injection solution;

FIG. 10 is a schematic view of the device shown in FIG. 9 after the preparation of the injection solution; and

FIG. 11 is a schematic view of the device according to FIGS. 9 and 10 with applied cannula and ready for injection.

DETAILED DESCRIPTION OF THE PREFERRED EMBODIMENTS

A sectional view of a dual-chamber cylinder ampoule for use in an injection device according to the invention is shown in FIG. 1. The ampoule consists of a tube 1, preferably of glass or a plastic material, which is formed as a bottle-neck with a flange 2 at its front end. The front end is sealed by means of a membrane 3 of rubber or a suitable plastic material which is secured by means of a metal capsule 4. The capsule 4 has an aperture 5 at its central portion so that the membrane 3 is uncovered there. The edge portion of the capsule is further bent around the flange 2 so that the membrane 3 is secured against the front aperture of the ampoule.

The ampoule is divided into a front space 6 and a rear space 7 by means of a movable partition 8. The rear end of the ampoule is sealed by the movable wall 9 which, thus, also seals the rear chamber 7. The two movable walls 8 and 9 can be moved forwards in the ampoule with sealing against the ampoule ~~wall,~~ the ampoule having a substantially circular-cylindrical shape for this purpose.

The front chamber 6 of the ampoule contains one or more medicaments 10 in a dry state, preferably freeze-dried. In this form, also sensitive substances have a relatively good stability. The rear chamber 7 contains a liquid phase 11 which is intended to dissolve the dry injection substance. This liquid phase usually consists of water or a physiological saline solution, and such auxiliary substances as are usual in pharmacological practice can be added to it.

In the wall of the ampoule, connecting passage 12 in the form of a recess is arranged and extends substantially in the longitudinal direction of the ampoule. The overflow passage 12 is located such that it is completely in the front space 6 before the ampoule has been readied for injection and has such a length that it enables a flow past the movable wall 8.

FIG. 2 shows the injection device of the present invention in an assembled state where it can be easily carried along by the patient. The device is generally shaped as a fountain-pen and consists of a front casing portion 13 which encloses a dual chamber cylinder ampoule according to FIG. 1 for the agent to be injected, a rear casing portion 14 enclosing a mechanism for dosage and administration of the agent and a protective cap 15 over the injection needle. The mechanism for dosing and administering the agent is made in any one of several ways known in the art and is not described here in greater detail. Usually it works in such a way that the control knob 16 at the rear end of the device is turned so that an index is set against a scale, a suitable dose being determined. In administration, the control knob is thereafter pushed in, whereby the set dose is administered through the needle. Many different embodiments of such a mechanism for dosage and administration are previously known and can be used in the injection device of the present invention.

FIG. 3 shows the injection device in its disassembled state. Here the protective cap 15 has also been removed so that the front portion 17 of the needle with its holder means 18 is shown. The needle can be screwed onto the front end of the front casing portion 13 by means of the holder device and can be easily replaced. The protective cap 15 should then be applied all the time so that sterility is maintained, and should not be removed until immediately before the injection. An aperture 19 is also made in the front casing portion 13 through which the user can easily control whether any ampoule is inserted and how much is left of the injection solution.

The rear casing portion 14 can be screwed into the front case portion 13 by means of the thread 20. Simultaneously with this screwing an inserted dual-chamber cylinder ampoule for injection is readied, as will be described more closely in the following.

FIG. 4 is a view partly in longitudinal section of the disassembled injection device according to FIG. 3. Here it is apparent that a dual-chamber cylinder ampoule of the type shown in FIG. 1 has been inserted into the front case portion 13 and moved so far that its membrane 3 has been uncovered to be penetrated by the needle. In the rear case portion 14 the dosage and administration mechanism is schematically indicated at 22. This mechanism is provided with a forwardly directed operating rod 23. By its actuation the dual-chamber cylinder ampoule is first readied for injection and determined doses of the injection agent can thereafter be administered with the aid of the control knob 16.

BEST POSSIBLE COPY

The rear casing portion 14 can be screwed into the front casing portion 13 by the external thread 20 engaging the internal thread 24.

FIG. 5 shows the device assembled and ready for injection. Here the rear movable wall 9 has been moved so far that it has got into contact with the front movable wall 8. This has been brought so far that it has got just opposite the connecting passage 12 and the liquid phase 11 has then flowed past the front movable wall 8 and been mixed with the dry medicament. The pointed rear end 21 of the needle has also been introduced through the membrane 3. The two movable walls 8 and 9 are in contact with each other and have been moved so far that all air in the front space 6 has been expelled through the needle. The device is now ready for injection.

The function of the device when being readied for injection is as follows:

In the rear casing portion 14, the operating rod 23 and the control knob 16 of the dosing and administering mechanism 22 is first set to a starting or zero position. This is done in a way as determined by the design of the mechanism known in the art. The rear casing portion 14 is thereafter screwed into the front casing portion 13 until the operating rod 23 is resting lightly against the rear movable wall 9 in the dual-chamber cylinder ampoule.

When the rear casing portion is screwed in further, the operating rod will push the rear movable wall 9 forwards in the cylinder ampoule, and as the liquid 11 in the rear space 7 is substantially incompressible, the front movable wall 8 will also be pressed forwards. A certain overpressure in the front chamber 6 will arise as air cannot escape.

When the front movable wall 8 has been pushed so far that it is just opposite the overflow passage 12 a liquid connection will be established between the front and the rear chambers. By the further forward motion of the rear movable wall 9 the liquid 11 will then be urged into the front chamber 6 through the overflow passage 12. At this stage, the front movable wall 8 will not move.

When all liquid has been urged into the front space, the rear movable wall 9 will get into mechanical contact with the front movable wall 8. The liquid will now dissolve the dry medicament 10 forming an injection solution ready for use. The holder 18 with the attached needle 17 is thereafter screwed onto the front case portion 13, the membrane 3 of the cylinder ampoule being penetrated by the rear needle tip 21, and the overpressure in the front chamber is released.

By pushing the control knob 16 fully home, the operating rod 23 is actuated so that the walls 9 and 8 are moved further forwards and air in the cylinder ampoule will exit through the needle 17. The device is now ready for injection, as shown in FIG. 5.

When readying the device it is necessary to hold it vertically with the needle end pointing upwards, and the screwing together must not be carried out too quickly. In this way the liquid will rise calmly through the dry substance dissolving it, and no vigorous mixing takes place. Such vigorous mixing is unsuitable for many sensitive substances as it may affect the substance.

It is a preferred embodiment that the dual-chamber cylinder ampoule 1 is positioned in the front casing portion 13 and the solid medicament is dissolved before the needle 21 penetrates the membrane 3 of the ampoule. By the overpressure occurring, the tendency of foaming and formation of bubbles is reduced when the liquid and the solid material are mixed, which is less harmful to the medicament. However, for medicaments that are not so sensitive, the needle holder 18 with the needle can be screwed onto the front casing portion 13 before the cylinder ampoule is introduced and the two casing portions are screwed together. The rear tip of the needle will then penetrate the membrane 3 before the solid substance and the liquid are mixed and no overpressure arises in the mixing chamber.

When the device is to be used for the administration of an injection the protective cap over the needle is first taken off. The desired dose is thereafter set by means of the control knob 16 and by depressing the control knob the dose is administered through the needle. Further doses can thereafter be administered as long as there is injection solution left in the cylinder ampoule. After each administration, the needle is usually replaced with a new sterile needle. This can easily be done by screwing off the holder device 18 with the attached needle from the front end of the injection device and a new holder device with needle is screwed on. At the same time the rear pointed end of the needle will penetrate the membrane 3 and provide a lqiuid connection to the interior of the ampoule.

Another embodiment of the device according to the invention shown in FIG. 6 comprises a holder means in which the container 1 can be placed. The holder means consists of two substantially tubular members that can be screwed together, viz. a front tubular member 24 and a rear tubular member 28. The front tubular member 24 has a tapering recess 25 at its front end in which the neck ring 2 of the ampoule 1 can be received. At its rear end the front tubular member is provided with an internal thread 26 into which an external thread 27 on the rear tubular member 28 can be threaded. At its rear end the rear tubular member 28 has a closed rear wall 29 to which a fixed piston is attached internally in the rear tubular member 28 which piston has a diameter less than the inside diameter of the ampoule and extends towards the ampoule 1.

In preparation of the injection solution the rear tubular member 28 is threded into the front tubular member 24, the holder means preferably being held vertically with the tapering recess 25 turned upwards. When the rear tubular member 28 is threaded into the front tubular member 24 the fixed piston 30 will move the rear tubular wall upwards compressing the liquid 11 in the rear room 7. The liquid will then exert a pressure on the front wall 8 so that this is moved upwards to a position right in front of the connecting passage 12, in which position the liquid 11 can flow calmly through the connecting passage 12 into the front space 6 and be mixed with the medicament substance 10. As the two tubular members 24 and 28 are screwed together a very calm flow of the liquid into the front space 6 will take place which, moreover, is closed by the membrane at the front end of the ampoule. When the liquid flows into the front space 6 a pressure above atmospheric is formed in this and a small pocket 31 with compressed gas is formed at the top of the ampoule, as is apparent from FIG. 7, which shows the holder means in the position when the two tubular members 24 and 28 are completely threaded into each other and all liquid has streamed into the front space 6. Thanks to the calm inflow of the liquid into the upper space 6 and the pressure above atmospheric formed foam formation in mixing is prevented. Of course the device can thereafter be turned a few times, if required, to dissolve the medicament substance completely in the liquid.

BEST POSSIBLE COPY

When taking out the injection solution prepared in this way the device is turned to the position shown in FIG. 8, thus with the front end of the ampoule 1 turned downwards, the gas in the front space 6 of the ampoule 1 being collected at the top and not close to the membrane. The injection solution can then be taken out with the aid of a cannula 32 which is introduced through the membrane and transferred to a usual hypodermic syringe 33 in a known manner. It is easier to take out the injection solution from the ampoule 1 due to the pressure above atmospheric prevailing in the front space 6 of the ampoule so that the solution at least at the introductory moment will flow by its own pressure through the cannula 32 into the hypodermic syringe 33.

As previously mentioned a further different embodiment of the device according to the invention is shown in FIGS. 9–11 which, however, has substantially the same constituents as the device shown in FIGS. 6 and 7. The main difference is that the device according to FIGS. 9–11 is designed to be directly provided with a cannula at the tapering recess 25 of the front tubular member 24. Moreover, the rear wall 29 of the rear tubular member 28 is not closed but has a central hole 34 through which an operating rod 35 passes. The operating rod 35 is integrally connected with the piston 30 within the rear tubular member 28, the piston however not being attached to the rear tubular member 28 but restrictedly movable in its longitudinal direction by the aid of the operating rod 35. Like in the device shown in FIGS. 6–8 the outside diameter of the piston 30 is less than the inside diameter of the ampoule 1 but is at the same time larger than the diameter of the hole 34 in the rear wall 29 so that the piston 30 cannot be moved out of the rear tubular member 28. The two tubular members 24 and 28 are screwed together from the position shown in FIG. 9, in which the constituents of the injection solution are quite separated from one another, in the same way as described in connection with the first varied embodiment according to FIGS. 6–8, until a complete mixture has been achieved and the device is in the position shown in FIG. 10. In this position a cover 36 is put onto the tapering recess 25 of the front tubular member 24. Moreover, a cannula 32 is attached to the cover 35 which penetrates the membrane of the ampoule 1 when the cover is put onto the tapering recess 25. This is done in a substantially vertical position with the recess 25 turned upwards. The device is then read for use as a hypodermic syringe, the injection being carried out by pressing in the operating rod 35 so that the piston 30 moves the two movable walls 8 and 9 forwards in the front space 6 in the ampoule and the gas in the ampoule is first removed and so that thereafter the injection solution is fed out through the cannula 32 in known manner.

A very practical and simple instrument for preparation of an injection solution is obtained with the device of the invention. As mentioned above, the device provides a very calm safe mixture of the constituents of the injection solution. If mixing is carried out too quickly the result is particle formation and opalescence. Both are expressions of aggregation. The device is preferably made of a plastic material and in that case the costs of the manufacture of the device will be very low and the device can be used for non-recurrent use. The pitch of the threadable members is not critical but is preferably in the range of 0.5–10 mm.

The device of the invention is preferably used for subcutaneous injection but other injection methods according to current medical practice are also possible, for example intramuscular injection.

When the cylinder ampoule is emptied, the injection device is screwed apart and the empty ampoule is taken out. The dosing mechanism is set to zero and after this the device can be readied again for injection, as indicated above. The screwed-together and readied device can be easily carried along by the user in order to be used at suitable times.

It may be necessary to protect sensitive medicaments, especially of the polypeptide type, against mechanical action when they are in a dissolved form. The moments especially critical are the reconstitution of a dried powder, on one hand, and, on the other hand, the subsequent handling of the prepared solution. The latter will be particularly important when multi-dose preparations are concerned, which must necessarily be handled a number of times.

The use of conventional packages and hypodermic syringes does not give any aid per se to protect against mechanical stresses which, however, this invention does. As the reconstitution of the dried powder by means of the invention is carried out in a very careful way determined by the design, the sensitive medicament is spared. As the solution is prepared at a certain overpressure, foaming and formation of bubbles are also prevented at this stage. The subsequent handling of the prepared solution will also be very gentle in the invention. Practically all air that has been in contact with the solution is removed as the injecting device is readied to give off a first injection from a newly inserted dual-chamber cylinder ampoule. In this way the interface is eliminated which in the handling of the container with solution gives rise to the negative effects on the sensitive medicament, and the container can thereafter be handled without special respect to the sensitive nature of the solution.

Thus it is possible by the present invention to prepare a solution to be used for a long or short time in a gentle way and to transport a prepared solution without degrading the quality of the sensitive medicament due to mechanical stress. Therefore the invention makes it possible that also sensitive medicaments can be made available for a comfortable ambulatory treatment.

The medicaments that can be used in the present device can consist of any substance or mixture of substances used in the previously known dual-chamber ampoules or which are suitable for this use. However, sensitive substances that cannot be stored for a long time in solution and which also have a tendency to be altered when dissolved are especially suitable. Examples of such substances are various polypeptides such as hormones and interferon. The invention has been found to be particularly suitable in the preparation and injection of solutions of growth hormones. These are very sensitive and are easily modified when a solution of them is prepared. By using the present invention in this case, such an influence is considerably reduced. This is extremely surprising and not predictable by one skilled in the art.

Th dry medicaments are usually present in a freeze-dried or lyophilized state before the preparation of the injection solution. The liquid used for the solution usually consists of water to which agents for adjusting the osmotic pressure, preservatives, and the like have often been added in accordance with current pharmacological practice. It is also possible that the liquid phase itself can contain dissolved substances having a pharmaco-

BEST POSSIBLE COPY

logical effect which is then exerted together with the effect of the agent that is later dissolved in the liquid.

Another embodiment is that the liquid can consist of an injectable fat emulsion, for example such a one as is described in U.S. Pat. Nos. 4,073,943 and 4,168,308. In this case the dry injection substance contains a water-soluble or hydrophilic agent which is dissolved or dispersed in the aqueous phase of the emulsion in the mixture.

The injection device is made of some suitable material such as metal, for example stainless steel or light metal or some suitable plastic material. The choice of material is well within the competence of one skilled in the art.

Moreover, it should be noted that the method and device of the invention shown in the drawing and the detailed description are only an example and that other embodiments are also possible within the scope of the claims.

What is claimed is:

1. A method of preparing a solution, emulsion, or suspension in a fluid of one or more sensitive medicaments for one or more subsequent injections using a multi-chamber cylindrical ampoule including at least a first chamber of a variable volume for containing the sensitive medicament, said first chamber being sealed at its front end by a membrane penetrable to an injection needle and delimited at its rear end by a first movable member, and a second chamber formed in said cylindrical ampoule for containing the fluid and being defined at its front end by said first movable member and at its rear end by a second movable member, and a connecting passage arranged in a wall of said cylindrical ampoule between said first and second chambers for providing a communication therebetween, said method comprising the steps of:

providing a holder member for holding said cylindrical ampoule therein, said holder member including a first and a second part, said first and second part including corresponding threaded means thereon;

inserting said cylindrical ampoule into one of said parts of said holder member;

connecting said first and second parts by screwing said corresponding threaded means;

simultaneously with said screwing, effecting movement of said second movable member with said fluid towards said first movable member for causing movement of said first movable member along the wall of said cylindrical ampoule for opening said connecting passageway;

continuing screwing of said parts of said holder member whereby a slow, gentle and constant flow of said fluid controlled by the screwing operation is provided from said second into said first chamber for the dissolution, suspension or emulsification of the sensitive medicament in said first chamber.

2. The method according to claim 1, wherein said fluid and said sensitive medicament are brought into contact with one another at a pressure above atmospheric.

3. The method according to claim 1, wherein said membrane is penetrated by the injection needle only after the medicament has been dissolved, emulsified or suspended in said fluid.

4. A method of dissolution of a sensitive solid substance by a liquid substance in a container in which each of said substances is being kept in one of two separate chambers of variable volume, said chambers being capable of passing liquid from said chamber containing said liquid into said chamber containing said sensitive, solid substance through a passageway communicating said chambers upon actuation by an external member, said method comprising the steps of:

providing an encasing member having two parts, said two parts being connectable through corresponding threaded means;

positioning said container in one of said two parts of said encasing member;

applying said two parts of said encasing member for interconnection;

causing longitudinal displacement of said second chamber filled with said liquid towards said first chamber by means provided in said second part of said encasing member upon screwing movement of said two encasing members to effect movement of said first chamber, whereupon effecting an actuation and opening of a liquid communication between said first and second chamber through said passageway for slowly and gently passing said liquid from said second to said first chamber, the flow of said liquid being steadily controlled by said screwing movement, whereby the mixing and the dissolution of said sensitive, solid substance by said liquid substance is protected against shaking and other mechanical influence.

5. An injection device for the preparation of a solution, emulsion or suspension of a sensitive, solid substance in a fluid and a subsequent injection, with said solid, sensitive medicament and said fluid being kept separately, said device comprising:

a dual-chamber cylindrical member, with a first chamber for containing said sensitive, solid substance having a bottom defined by a needle penetrable member and a top defined by a first movable member, a second chamber for containing said fluid having a bottom defined by said first movable member and a top defined by a second movable member, and a connecting passage formed in the wall of said cylindrical member for communicating said first and second chambers, said connecting passage being located entirely within said first chamber and closed off from said second chamber by said first movable member and openable upon external actuation; and

a first and a second tubular member, said tubular members including threaded means for interconnection of said first and second members for encasing said dual-chamber cylindrical member therein, said first tubular member being adapted for holding said cylindrical member therein and having means for exposing said penetrable member to a needle injection;

said second tubular member housing means for effecting longitudinal movement of said second movable member with said fluid and of said first movable member to open said connecting passageway for passing said fluid from said second to said first chamber upon screwing operation of said two tubular members onto each other, said screwing operation controlling passing of said fluid into said second chamber for dissolution of said sensitive, solid substance, whereby said dissolution and a subsequent handling of the dissoluted substance is maintained in a gentle, slow and lenient manner, preventing any deterioration of the sensitive medicament by mechanical influence.

BEST POSSIBLE COPY

BEST POSSIBLE COPY

6. The injection device according to claim 5, wherein said means for effecting longitudinal movement comprises a piston arranged in said other tubular member and wherein said means for exposing said penetrable member includes an opening provided in said one tubular member alignable with said penetrable member.

7. A injection device for the preparation of an injection solution of degradation-sensitive substances and a subsequent injection of the solution, comprising:

a dual-chamber container for separate containing of the constituents of the injection solution and means for bringing the constituents together to be mixed and dissolved, said container including a tubular member being sealed at its front end by a needle penetrable member which defines a bottom of a first chamber with a variable volume, and a first movable member disposed in said tubular member defining a top of said first chamber, said first chamber containing the solid constituents of the injection solution, and a second chamber having a bottom defined by said first movable member and a top defined by a second movable member, said second chamber containing the liquid constituents of the injection solution, and said means for bringing said liquid and solid constituents together including a connecting passage in a wall of said tubular member arranged to be closed by said first movable member in a separated state of said constituents;

holding means adapted for insertion of said dual-chamber container therein, said holding means including a first and a second part, each provided with corresponding threaded means for connecting said first and second parts together;

said needle penetrable member being exposed at a front end of said first part of said holding means for penetration by an injection needle, said second part of said holding means being provided with means for effecting movement of said second movable member towards said first movable member, causing movement of said liquid constituent and of said first movable member for opening of said connecting passageway, upon screwing of said first and second parts onto each other, whereby said liquid constituent flows from said second chamber into said first chamber to mix with said solid constituents, wherein the flow of said liquid is controlled by screwing of said first and second parts; and

means for injection of said solution.

8. A device according to claim 7, wherein said means for injection comprising a dosing device connected to said second part of said holding means.

9. A device according to claim 8, wherein said dosing device is brought into a starting position when screwed together with said parts of said holding means, said dosing device being provided with means for effecting said longitudinal displacement of said second movable member.

10. A device according to claim 7, further comprising:

a holder for an injection needle connectable to said front end of said first part of said holding means.

11. A device according to claim 7, wherein said means for injection comprises a plunger rod connected to said means for effecting movement of said second movable member.

* * * * *

APPEARS THIS WAY
ON ORIGINAL

130013

NEW DRUG APPLICATION

GENOTROPIN®

Patent certification

We certify that the injection device(s) for Genotropin and the method of preparing the injection solution, both being integrated subjects of this application, are covered by the following valid US Patent:

US Patent 4,968,299; expires November 6, 2007

The above patent covers, (claims 1-4) a method of using a dual-chamber cylinder ampoule for the mixing of a sensitive, solid medicament, with liquid which is caused to flow calmly through the medicament in order to avoid any shaking and mechanical influence, and (claims 5-11) an injection device for the preparation of an injection solution and a following injection of such solution includes first and second tubular members for enclosing and holding a dual-chamber cylinder ampoule, in which the dry medicament is kept separated from the liquid. When the two tubular members are being screwed together the liquid is calmly and gently mixed with the dry medicament and dissolves it, and the resulted solution can thereafter be injected by means of the dosage and administration mechanism, provided in one tubular member, through a needle arranged at the front end of the other tubular member.

The patent originally assigned to KabiVitrum AB is now, following a merger with the Pharmaceutical Division of Pharmacia AB, the property of Kabi Pharmacia AB.

Michael A. Trapani

Michael a. Trapani
Associate Director
Regulatory Affairs

5/15/92

Date

BEST POSSIBLE COPY

EXCLUSIVITY SUMMARY for NDA # 20-280 SUPPL # 008

Trade Name Genotropin Generic Name [somatropin (rDNA origin) for injection]
Applicant Name Pharmacia and Upjohn Inc. HFD- 510

Approval Date _____

PART I IS AN EXCLUSIVITY DETERMINATION NEEDED?

1. An exclusivity determination will be made for all original applications, but only for certain supplements. Complete Parts II and III of this Exclusivity Summary only if you answer "yes" to one or more of the following questions about the submission.

   a) Is it an original NDA? YES /___/ NO /_X_/

   b) Is it an effectiveness supplement? YES /_X_/ NO /___/

   If yes, what type? (SE1, SE2, etc.) SE1

   c) Did it require the review of clinical data other than to support a safety claim or change in labeling related to safety? (If it required review only of bioavailability or bioequivalence data, answer "no.")

   YES / X / NO /___/

   If your answer is "no" because you believe the study is a bioavailability study and, therefore, not eligible for exclusivity, EXPLAIN why it is a bioavailability study, including your reasons for disagreeing with any arguments made by the applicant that the study was not simply a bioavailability study.

   _____

   If it is a supplement requiring the review of clinical data but it is not an effectiveness supplement, describe the change or claim that is supported by the clinical data:

   _____

   d) Did the applicant request exclusivity? YES /___/ NO /_X_/

   If the answer to (d) is "yes," how many years of exclusivity did the applicant request?

   _____

IF YOU HAVE ANSWERED "NO" TO ALL OF THE ABOVE QUESTIONS, GO DIRECTLY TO THE SIGNATURE BLOCKS ON PAGE 7.

2. Has a product with the same active ingredient(s), dosage form, strength, route of administration, and dosing schedule previously been approved by FDA for the same use?

YES /_X_/ NO /___/

If yes, NDA # 19-640/S013 Drug Name Humatrope

IF THE ANSWER TO QUESTION 2 IS "YES," GO DIRECTLY TO THE SIGNATURE BLOCKS ON PAGE 7.

3. Is this drug product or indication a DESI upgrade?

YES /___/ NO /___/

IF THE ANSWER TO QUESTION 3 IS "YES," GO DIRECTLY TO THE SIGNATURE BLOCKS ON PAGE 7 (even if a study was required for the upgrade).

PART II FIVE-YEAR EXCLUSIVITY FOR NEW CHEMICAL ENTITIES
(Answer either #1 or #2, as appropriate)

1. Single active ingredient product.

Has FDA previously approved under section 505 of the Act any drug product containing the same active moiety as the drug under consideration? Answer "yes" if the active moiety (including other esterified forms, salts, complexes, chelates or clathrates) has been previously approved, but this particular form of the active moiety, e.g., this particular ester or salt (including salts with hydrogen or coordination bonding) or other non-covalent derivative (such as a complex, chelate, or clathrate) has not been approved. Answer "no" if the compound requires metabolic conversion (other than deesterification of an esterified form of the drug) to produce an already approved active moiety.

YES /___/ NO /___/

If "yes," identify the approved drug product(s) containing the active moiety, and, if known, the NDA #(s).

NDA #_____ _____

NDA #_____ _____

NDA # _____ _____

2. Combination product.

If the product contains more than one active moiety (as defined in Part II, #1), has FDA previously approved an application under section 505 containing any one of the active moieties in the drug product? If, for example, the combination contains one never-before-approved active moiety and one previously approved active moiety, answer "yes." (An active moiety that is marketed under an OTC monograph, but that was never approved under an NDA, is considered not previously approved.)

YES /___/ NO /___/

If "yes," identify the approved drug product(s) containing the active moiety, and, if known, the NDA #(s).

NDA # _____ _____

NDA # _____ _____

NDA # _____ _____

IF THE ANSWER TO QUESTION 1 OR 2 UNDER PART II IS "NO," GO DIRECTLY TO THE SIGNATURE BLOCKS ON PAGE 8. IF "YES," GO TO PART III.

PART III THREE-YEAR EXCLUSIVITY FOR NDA'S AND SUPPLEMENTS

To qualify for three years of exclusivity, an application or supplement must contain "reports of new clinical investigations (other than bioavailability studies) essential to the approval of the application and conducted or sponsored by the applicant." This section should be completed only if the answer to PART II, Question 1 or 2, was "yes."

1. Does the application contain reports of clinical investigations? (The Agency interprets "clinical investigations" to mean investigations conducted on humans other than bioavailability studies.) If the application contains clinical investigations only by virtue of a right of reference to clinical investigations in another application, answer "yes," then skip to question 3(a). If the answer to 3(a) is "yes" for any investigation referred to in another application, do not complete remainder of summary for that investigation.

   YES /___/ NO /___/

IF "NO," GO DIRECTLY TO THE SIGNATURE BLOCKS ON PAGE 7.

2. A clinical investigation is "essential to the approval" if the Agency could not have approved the application or supplement without relying on that investigation. Thus, the investigation is not essential to the approval if 1) no clinical investigation is necessary to support the supplement or application in light of previously approved applications (i.e., information other than clinical trials, such as bioavailability data, would be sufficient to provide a basis for approval as an ANDA or 505(b)(2) application because of what is already known about a previously approved product), or 2) there are published reports of studies (other than those conducted or sponsored by the applicant) or other publicly available data that independently would have been sufficient to support approval of the application, without reference to the clinical investigation submitted in the application.

   For the purposes of this section, studies comparing two products with the same ingredient(s) are considered to be bioavailability studies.

   (a) In light of previously approved applications, is a clinical investigation (either conducted by the applicant or available from some other source, including the published literature) necessary to support approval of the application or supplement?

   YES /___/ NO /___/

If "no," state the basis for your conclusion that a clinical trial is not necessary for approval **AND GO DIRECTLY TO SIGNATURE BLOCK ON PAGE 7:**

_____

_____

(b) Did the applicant submit a list of published studies relevant to the safety and effectiveness of this drug product and a statement that the publicly available data would not independently support approval of the application?

YES /___/ NO /___/

(1) If the answer to 2(b) is "yes," do you personally know of any reason to disagree with the applicant's conclusion? If not applicable, answer NO.

YES /___/ NO /___/

If yes, explain: _____

_____

(2) If the answer to 2(b) is "no," are you aware of published studies not conducted or sponsored by the applicant or other publicly available data that could independently demonstrate the safety and effectiveness of this drug product?

YES /___/ NO /___/

If yes, explain: _____

(c) If the answers to (b)(1) and (b)(2) were both "no," identify the clinical investigations submitted in the application that are essential to the approval:

Investigation #1, Study # _____

Investigation #2, Study # _____

APPEARS THIS WAY ON ORIGINAL

3. In addition to being essential, investigations must be "new" to support exclusivity. The agency interprets "new clinical investigation" to mean an investigation that 1) has not been relied on by the agency to demonstrate the effectiveness of a previously approved drug for any indication and 2) does not duplicate the results of another investigation that was relied on by the agency to demonstrate the effectiveness of a previously approved drug product, i.e., does not redemonstrate something the agency considers to have been demonstrated in an already approved application.

a) For each investigation identified as "essential to the approval," has the investigation been relied on by the agency to demonstrate the effectiveness of a previously approved drug product? (If the investigation was relied on only to support the safety of a previously approved drug, answer "no.")

Investigation #1 YES /___/ NO /___/

Investigation #2 YES /___/ NO /___/

If you have answered "yes" for one or more investigations, identify each such investigation and the NDA in which each was relied upon:

NDA # _____ Study #_____
NDA # _____ Study #_____
NDA # _____ Study #_____

b) For each investigation identified as "essential to the approval," does the investigation duplicate the results of another investigation that was relied on by the agency to support the effectiveness of a previously approved drug product?

Investigation #1 YES /___/ NO /___/

Investigation #2 YES /___/ NO /___/

If you have answered "yes" for one or more investigations, identify the NDA in which a similar investigation was relied on:

NDA # _____ Study #_____
NDA # _____ Study #_____
NDA # _____ Study #_____

c) If the answers to 3(a) and 3(b) are no, identify each "new" investigation in the application or supplement that is essential to the approval (i.e., the investigations listed in #2(c), less any that are not "new"):

Investigation #1_, Study # _____

Investigation #2_, Study # _____

4. To be eligible for exclusivity, a new investigation that is essential to approval must also have been conducted or sponsored by the applicant. An investigation was "conducted or sponsored by" the applicant if, before or during the conduct of the investigation, 1) the applicant was the sponsor of the IND named in the form FDA 1571 filed with the Agency, or 2) the applicant (or its predecessor in interest) provided substantial support for the study. Ordinarily, substantial support will mean providing 50 percent or more of the cost of the study.

a) For each investigation identified in response to question 3(c): if the investigation was carried out under an IND, was the applicant identified on the FDA 1571 as the sponsor?

Investigation #1

IND # _____ YES /___/ NO /___/ Explain: _____

Investigation #2

IND # _____ YES /___/ NO /___/ Explain: _____

(b) For each investigation not carried out under an IND or for which the applicant was not identified as the sponsor, did the applicant certify that it or the applicant's predecessor in interest provided substantial support for the study?

Investigation #1

YES /___/ Explain _____ NO /___/ Explain _____

Investigation #2

YES /___/ Explain _____ NO /___/ Explain _____

(c) Notwithstanding an answer of "yes" to (a) or (b), are there other reasons to believe that the applicant should not be credited with having "conducted or sponsored" the study? (Purchased studies may not be used as the basis for exclusivity. However, if all rights to the drug are purchased (not just studies on the drug), the applicant may be considered to have sponsored or conducted the studies sponsored or conducted by its predecessor in interest.)

YES /___/ NO /___/

If yes, explain: _____

_____

_____

_____

/S/

Michael F. Johnston
Signature of Project Manager

3-6-97
Date

/S/

Solomon Sobel M.D.
Signature of Division Director

10-31-97
Date

APPEARS THIS WAY
ON ORIGINAL

cc: Original NDA Division File HFD-85 Mary Ann Holovac

APPEARS THIS WAY
ON ORIGINAL

DEBARMENT CERTIFICATION

Genotropin Adult sNDA

Pursuant to section 306(k)(1) of the Federal Food, Drug and Cosmetic Act, the applicant certifies that, the applicant did not and will not use in any capacity the services of any person listed pursuant to section 306(e) as debarred under subsections 306(a) or (b) of the Act in connection with this application.

Edward L. Patt

10/28/97

Ed L. Patt
Manager
Regulatory Compliance

Date

APPEARS THIS WAY
ON ORIGINAL

APPEARS THIS WAY
ON ORIGINAL

ORIGINAL

Memorandum of Telecon

Department of Health and Human Services
Public Health Service
Food and Drug Administration
Center for Drug Evaluation and Research
Office of Clinical Pharmacology and Biopharmaceutics

Date of Telecon: 03/31/97
From: Robert M. Shore /S/
Re: Telecon about NDA 20-280/SE1-008 (Genotropin™) MAR 31 1997
Participants: Robert M. Shore (FDA); Greg Shawaryn (Pharmacia & Upjohn)

I called Greg (616/833-8239) to request the following information:

1. Is the 16 IU/mL cartridge used in each of the 6 primary clinical trials the US formulation (15IU/mL cartridge)? Greg stated he was not sure. If it was a European/other market formulation, he would submit the details of any differences.

2. I requested the production size of each of the batches used in the 6 primary clinical trials. Greg stated that, at the time the 6 primary clinical trials were performed, the average production batch size was probably
He will clarify this in his submitted response.

3. Is the 4 IU/mL vial used in the 2 bioequivalence trials **not** TBM? Greg stated that there are only cartridges marketed in the US.

4. Is the 4 IU/mL cartridge used in the remaining two Biopharm studies the TBM formulation. Greg stated they were.

5. The 8 IU/mL and 32 IU/mL cartridge formulations are probably developmental and not available in the US.

6. Greg informed me that there was recently a 12IU/mL cartridge and PEN12 approved for the US market. This formulation is **not** listed in the 'How Supplied' section of the package insert. Greg stated that it was the sponsor's intention to include the 12 IU/mL formulation in the labeling. I stated that this was the first time that I had heard of this 12 IU/mL formulation and that I was unsure of what the process will be in order to get it included in the labeling.

I asked that Greg submit this as an official amendment.

cc: NDA 20-280/SE1-008 (Orig., 1 copy), HFD-510(Shore, Johnston)

ORIGINAL

Memorandum of Telecon

Department of Health and Human Services
Public Health Service
Food and Drug Administration
Center for Drug Evaluation and Research
Division of Biopharmaceutics

JAN 17 1997

Date of Telecon: 01/17/97
From: Robert M. Shore /S/
Re: Telecon about Genotropin® (Somatropin) sNDA 20-280 for Adult GHD
Participants: Robert M. Shore (FDA); Greg Shawaryn (Pharmacia Upjohn)

Synopsis

(Previous relevant Telecon on 12/23/96)

I asked Greg Shawaryn (616/833-8239) about the status of the validation reports, requested in the 12/23/96 Telecon with Bill Scothorn, for the 4 pharmacokinetic studies submitted in this sNDA. He stated that Sweden has that data and they have been closed until January 6, 1997. They are working on gathering the requested data. He asked how the lack of this data may affect the review and I stated that, basically, it provides validation on which to build pharmacokinetic analysis - all pharmacokinetic results stem from the data and we need to know the data are reliable.

He stated that he would call me when he has a better handle on the time frame as to when the agency will be receiving these reports. I stated the sooner the better.

cc: sNDA 20-280/S008 (orig., 1 copy), HFD-870(Shore)

APPEARS THIS WAY
ON ORIGINAL

ORIGINAL

Memorandum of Telecon

Department of Health and Human Services
Public Health Service
Food and Drug Administration
Center for Drug Evaluation and Research
Division of Biopharmaceutics

JAN 10 1997

Date of Telecon: 12/26/96
From: Robert M. Shore /S/
Re: Telecon about efficacy supplement to NDA 20-280/S008 Genotropin® (somatropin)
Participants: Robert M. Shore (FDA); Bill Scothorn (Pharmacia & Upjohn AB, Kalamazoo, MI)

Synopsis

(On 12/23/96, I called Greg Shawaryn of Pharmacia & Upjohn AB (616-833-8239). His voicemail indicated that I contact Bill Scothorn because Greg was not available. I left a voicemail for Bill regarding the need for assay [illegible] to be submitted for the 4 studies in the above supplement.)

Bill Scothorn called me on 12/26/96. He had been faxed, by Mike Johnston CSO, the Biopharm filing review comments, which included the need for the assay validation data. He told me that Greg will contact me Monday, the plant is pretty much closed down at this time, and the data are probably in Sweden, which maybe closed, too.

cc: NDA 20-280/S008 (1 copy), HFD-870(Shore)

APPEARS THIS WAY
ON ORIGINAL

CENTER FOR DRUG EVALUATION AND RESEARCH

APPLICATION NUMBER: 020280/S008

CORRESPONDENCE

DEPARTMENT OF HEALTH & HUMAN SERVICES

Public Health Service

Food and Drug Administration
Rockville MD 20857

Date NOV - 7 1996
NDA No. 20-280

PHARMACIA AND UPJOHN COMPANY
7000 Portage Road
Kalamazoo, MI 49001

Attention: Robert A. Pearlberg, Director, Regulatory Affairs

Dear Sir/Madam:

We acknowledge receipt of your supplemental application for the following:

Name of Drug: GENOTROPIN (Somatropin for Injection)

NDA Number: 020280

Supplement Number: S-008

Date of Supplement: November 1, 1996

Date of Receipt: November 4, 1996

Unless we find the application not acceptable for filing, this application will be filed under Section 505(b)(1) of the Act on JAN - 1 1997 in accordance with 21 CFR 314.101(a).

All communications concerning this NDA should be addressed as follows:

Center for Drug Evaluation and Research
Division of Metabolic and Endocrine Drug Products
Attention: Document Control Room
5600 Fishers Lane, HFD-510
Rockville, MD 20857

Sincerely yours,

/S/

Chief, Project Management Staff
Division of Metabolic and Endocrine Drug Products
Office Drug Evaluation II
Center for Drug Evaluation and Research